3 CD DVD CHANGER KARAOKE MINI MINI COMPONENT

MAX-KD100/110/120
MAX-KD105/115/125
MAX-KDZ100/110/120
MAX-KDZ105/115/125

SERVICE Manual

MINI MINI COMPONENT SYSTEM

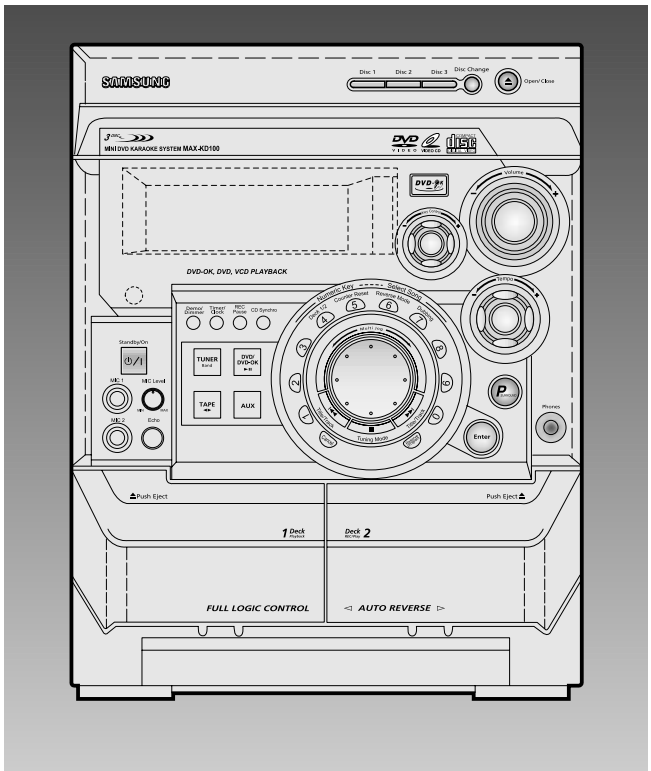

CONTENTS

1. Alignment and Adjustments
2. Exploded Views and Parts List
3. Electrical Parts List
4. Block Diagrams
5. PCB Diagrams
6. Wiring Diagram
7. Schematic Diagrams
8. Troubleshooting

Notice !!

You can search for the updated part code through ITSELF web site.
URL; http://itself.sec.samsung.co.kr

- Confidential -

1-1-2 AM(MW),LW Adjustment

	Circuit to be Adjusted	Measuring Instrument & Arrangement	Step	S.S.G Frequency	Radio dial Setting	Adjusting Point	Adjust for
AM (MW)	OSC	Connect AM signal generator to loop antenna,VTVM AND oscilloscope (Fig 1-3)	1	522KHz	522KHz	MW OSC	Aduust for 1.0V±0.1V at the low. (IR117)
			2	1611KHz	1611KHz	MW OSC	Check for 7.0V±1.0V at the high. (IR117)
	RF	"	1	594KHz	594KHz	MW ANT	Maximum out
	INTER FREQ	"	1	455KHz	522KHz	TL2	Maximum out
LW	OSC	Fig 1-3	1		146KHz	LW OSC	Aduust for 2.0V±0.1V at the low.
			2		290KHz	LW OSC	Check for 7.0V±1.0V at the high.
	RF		1	150KHz	150KHz	LW ANT	Maximum out

1-2 Cassette Deck (MAX-KD100/ KD110)

1-2-1 To Adjust Tape Speed

1) Measuring tape: i) MTT-111 (or equivalent)
(Tapes recorded with 3kHz)
ii) MTT-5512 (or equivalent)
2) Connect the cassette deck to the frequency counter as in figure 1-4.

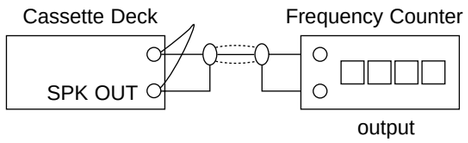

Figure 1-4

Step	Item	Pre-Setup Condition	Pre-Setup	To Adjust	Standard	Remark
1	NOR SPEED Control	OUT (connected to the frequency counter)	1) Deck 1:MTT-111 2) Press PLAY SW button 3) Deck 2:MTT-5512	Turn UVR1 to left and right	3KHz	

1-2-2 To Adjust PlayBack Level

Notes

1) Before the actual adjustment, clean the play/recording head.
2) Measuring tape :
i) MTT-114(or equivalent 10kHz AZIMUTH control)
ii) MTT-112(or equivalent) :
3) The cassette deck is connections as shown in figure 1-6.

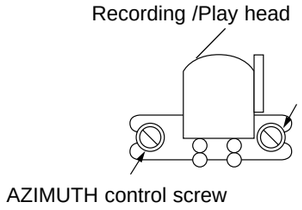

Figure 1-5

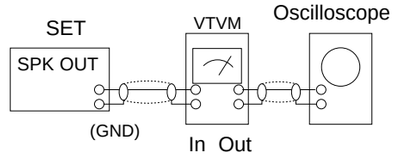

Figure 1-6

* Adjust Deck 1 Play Level

Step	Item	Pre-Setup Condition	Pre-Setup	To Adjust	Standard	Remark
1	AZIMUTH	SPK OUT (VTVM is connected to the scope)	After putting MTT-114 into Deck 1 1)Press PLAY button.	1) Turn the control screw to as shown in Figure 1-5.	Max output and same phase (both channels)	After adjustment secure it with REGION LOCK.

* Adjust Deck 2 Play Level

Step	Item	Pre-Setup Condition	Pre-Setup	To Adjust	Standard	Remark
1	AZIMUTH	SPK OUT (VTVM is connected to the scope)	After putting MTT-114 into Deck 2 1)Press PLAY button.	1) Turn the control screw to as shown in Figure 1-5.	Max output and same phase (both channels)	After adjustment secure it with REGION LOCK.

1-3 Cassette Deck (MAX-KD120)

1-2-1 To Adjust Tape Speed

Notes

1) Measuring tape: i) MTT-111 (or equivalent)
(Tapes recorded with 3kHz)
ii) MTT-5512 (or equivalent)
2) Connect the cassette deck to the frequency counter as in figure 1-4.

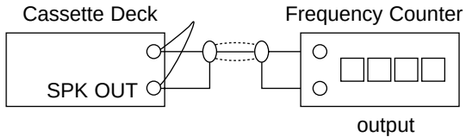

Figure 1-4

Step	Item	Pre-Setup Condition	Pre-Setup	To Adjust	Standard	Remark
1	NOR SPEED Control	OUT (connected to the frequency counter)	1) Deck 1:MTT-111 2) Press PLAY SW button 3) Deck 2:MTT-5512	Turn URV1 to left and right FRONT PCB	3KHz	

1-2-2 To Adjust PlayBack Level

Notes

1) Before the actual adjustment, clean the play/recording head.
2) Measuring tape :
i) MTT-114(or equivalent 10kHz AZIMUTH control)
ii) MTT-112(or equivalent) :
3) The cassette deck is connections as shown in figure 1-6.

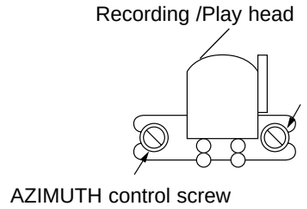

Figure 1-5

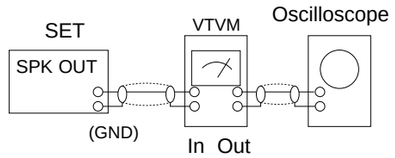

Figure 1-6

* Adjust Deck 1 Play Level

Step	Item	Pre-Setup Condition	Pre-Setup	To Adjust	Standard	Remark
1	AZIMUTH	SPK OUT (VTVM is connected to the scope)	After putting MTT-114 into Deck 1 1)Press PLAY button.	1) Turn the control screw to as shown in Figure 1-5.	Max output and same phase (both channels)	After adjustment secure it with REGION LOCK.

* Adjust Deck 2 Play Level

Step	Item	Pre-Setup Condition	Pre-Setup	To Adjust	Standard	Remark
1	AZIMUTH	SPK OUT (VTVM is connected to the scope)	After putting MTT-114 into Deck 2 1)Press PLAY button.	1) Turn the control screw to as shown in Figure 1-5.	Max output and same phase (both channels)	After adjustment secure it with REGION LOCK.

2.Exploded Views and Parts List

2-1-1 Cassette Deck :ADR266AMW (MAX-KD100/ KD110)

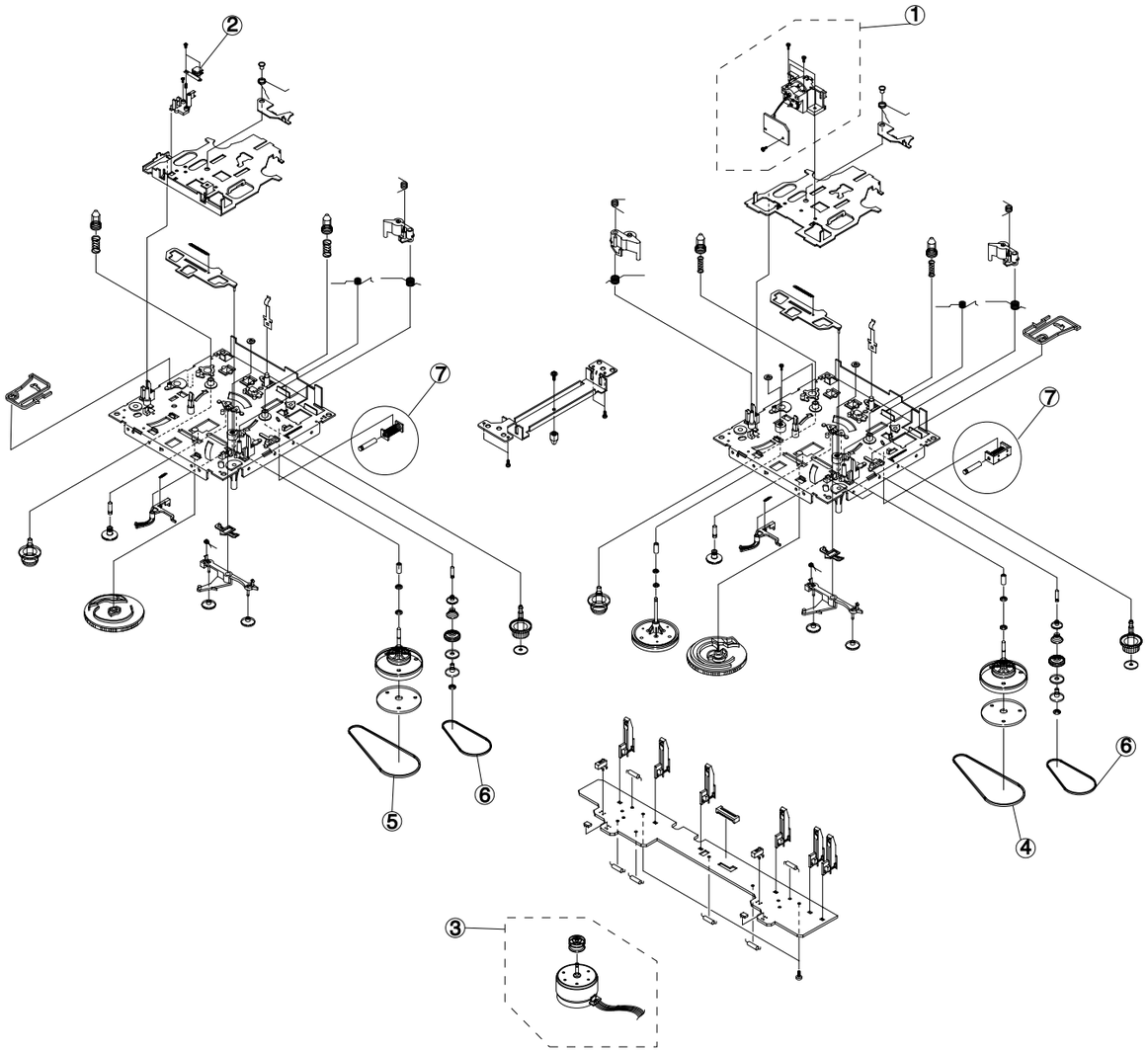

No.	Code No.	Description	Specification	Remarks
	AH59-01142A	**DECK-CASSETTE**	**ADR266AMW**	
1	AH81-01029A	A/S PART-R/P HEAD ASSY	YK56RAA4N1	MT91-1101
2	AH81-00141A	A/S-HEAD PB	TC881CB	MT59-00044A
3	AH81-00363A	A/S-ASSY MOTOR	ADR246DSW	MT91-15012J
4	AH81-00364A	A/S-BELT MAIN1	ADR246DSW	6602-001056
5	AH81-00365A	A/S-BELT MAIN2	ADR246DSW	6602-001057
6	AH81-00101A	A/S-BELT SUB	ADR2400S,34.7	6602-001055
7	AH81-00102A	A/S-SOLENOID	ADR2400-1	MT75-00049A

2-1-2 Cassette Deck :ADR268FTW (MAX-KD120)

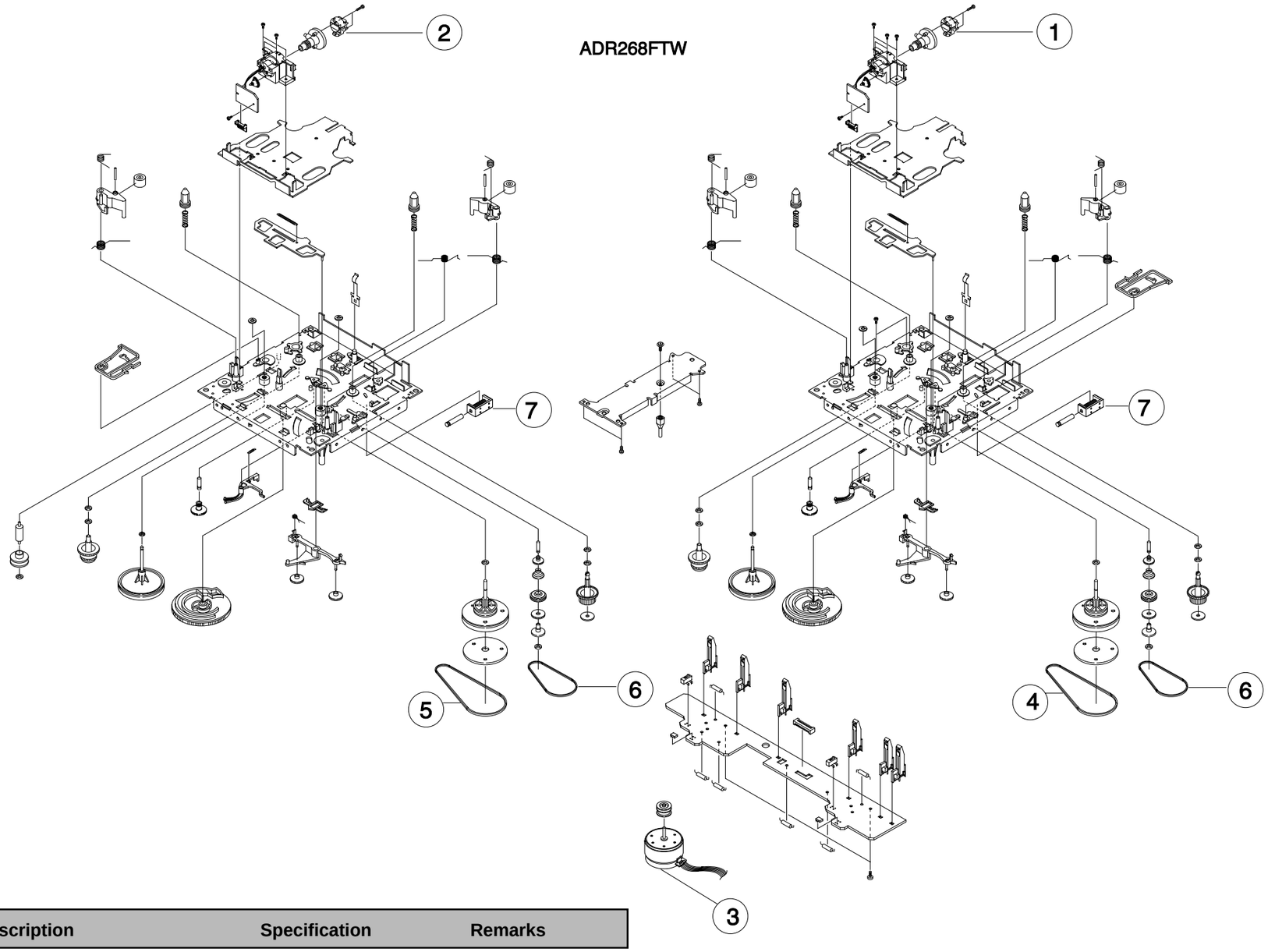

No.	Code No.	Description	Specification	Remarks
	AH59-01143A	**DECK-CASSETTE**	**ADR268FTW**	
1	AH81-01029A	A/S PART-R/P HEAD ASSY	YK56RAA4N1	MT91-1101
2	AH81-00369A	A/S-ASSY PB HEAD	ADR246FTW	MT59-00044A
3	AH81-00422A	A/S-ASSY MOTOR	ADR246DSW	MT91-15013Y
4	AH81-00364A	A/S-BELT MAIN1	ADR246DSW	6602-001056
5	AH81-00370A	A/S-BELT MAIN2	ADR246FTW	6602-001010
6	AH81-00101A	A/S-BELT SUB	ADR2400S,34.7	6602-001055
7	AH81-00102A	A/S-SOLENOID	ADR2400-1	MT75-00049A

2-2 Total Exploded View and Parts List

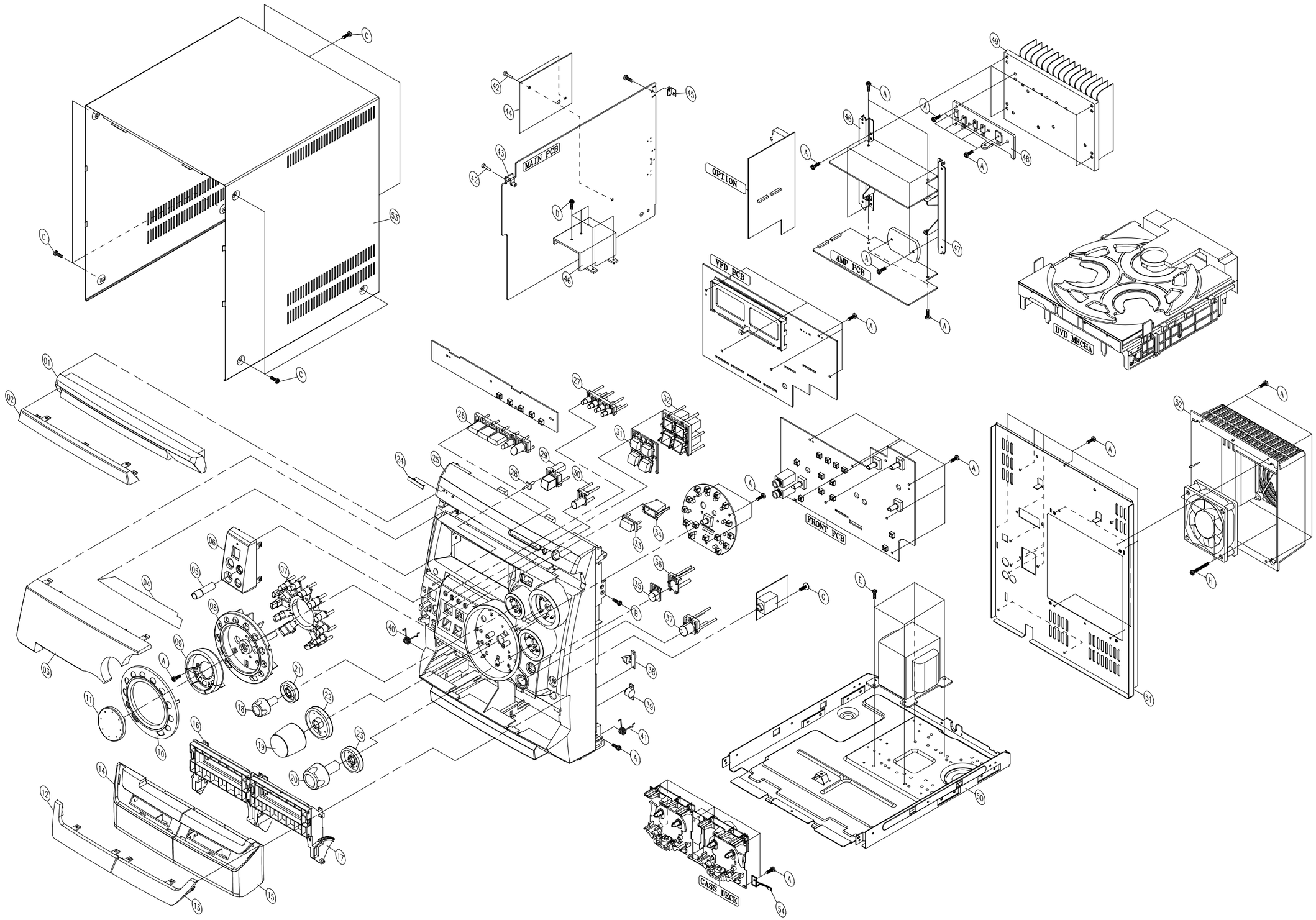

* Parts List of Total Exploded view

No.	Code No.	Description	Specification	Q'ty	Remark
1	AH64-01704B	DOOR-CD	ABS L/GRAY	1	MAX-KD120
	AH64-01704D	DOOR-CD	ABS D/GRAY	1	MAX-KD100
	AH64-01704E	DOOR-CD	ABS L/GRAY	1	MAX-KD110
2	AH64-01749G	WINDOW-DOOR CD	PMMA VIOLET	1	MAX-KD100
	AH64-01749K	WINDOW-DOOR CD		1	MAX-KD110
	AH64-01749L	WINDOW-DOOR CD		1	MAX-KD120
	AH64-01749M	WINDOW-DOOR CD	PMMA VIOLET	1	MAX-KD100 (N)
	AH64-01749N	WINDOW-DOOR CD		1	MAX-KD110 (N)
	AH64-01749P	WINDOW-DOOR CD		1	MAX-KD120 (N)
3	AH64-01705E	WINDOW-VFD	PMMA VIOLET	1	MAX-KD100/110/120
	AH64-01705F	WINDOW-VFD	PMMA VIOLET	1	MAX-KD100/110/120(N)
4	AH63-00395A	SHEET-VFD	PC 0.4T	1	
5	AH64-01715B	KNOB-MIC	ABS L/GRAY	1	MAX-KD100
	AH64-01715C	KNOB-MIC	ABS D/GRAY	1	MAX-KD110
	AH64-01715D	KNOB-MIC	ABS L/GRAY	1	MAX-KD120
6	AH61-00964B	CAP-MIC.D	ABS L/GRAY	1	MAX-KD120
	AH61-00964D	CAP-MIC.D	ABS D/GRAY	1	MAX-KD100
	AH61-00964E	CAP-MIC.D	ABS L/GRAY	1	MAX-KD110
7	AH64-02342B	KNOB-KARAOKE	ABS CLEAR 1Kg+5g	1	
8	AH63-00524A	COVER-KARAOKE	ABS L/GRAY	1	
9	AH64-01718F	KNOB-STOP	ABS L/BLUE	1	MAX-KD100/KD110
	AH64-01718G	KNOB-STOP	ABS L/GRAY	1	MAX-KD120
10	AH67-00215B	CAP-KARAOKE	AL 0.8T	1	MAX-KD110
	AH67-00215C	CAP-KARAOKE	AL 0.8T	1	MAX-KD120
	AH67-00215D	CAP-KARAOKE	AL 0.8T	1	MAX-KD100
11	AH64-01710B	KNOB-JOG	ABS L/GRAY	1	MAX-KD110/120
	AH64-01710C	KNOB-JOG	ABS L/GRAY	1	MAX-KD100
12	AH64-01706B	WINDOW-DOOR.A	PMMA VIOLET	1	
13	AH64-01707B	WINDOW-DOOR.B	PMMA VIOLET	1	
14	AH64-01701C	DOOR-CASS.A	ABS L/GRAY	1	MAX-KD120
	AH64-01701E	DOOR-CASS.A	ABS D/GRAY	1	MAX-KD100
	AH64-01701F	DOOR-CASS.A	ABS L/GRAY	1	MAX-KD110
15	AH64-01702B	DOOR-CASS.B	ABS L/GRAY	1	MAX-KD120
	AH64-01702D	DOOR-CASS.B	ABS D/GRAY	1	MAX-KD100
	AH64-01702E	DOOR-CASS.B	ABS L/GRAY	1	MAX-KD110
16	AH61-01011A	HOLDER-DOOR.A	ABS L/GRAY	1	MAX-KD120
	AH61-01011B	HOLDER-DOOR.A	ABS D/GRAY	1	MAX-KD100/KD110
17	AH61-01012A	HOLDER-DOOR.B	ABS L/GRAY	1	MAX-KD120
	AH61-01012B	HOLDER-DOOR.B	ABS D/GRAY	1	MAX-KD100/KD110
18	AH64-01716B	KNOB-SOUND	ABS L/GRAY	1	MAX-KD110/KD120
	AH64-01716C	KNOB-SOUND	ABS L/GRAY	1	MAX-KD100
19	AH64-01711B	KNOB-VOLUME	ABS L/GRAY	1	MAX-KD110/KD120
	AH64-01711C	KNOB-VOLUME	ABS L/GRAY	1	MAX-KD100
20	AH64-01717B	KNOB-SUBWOOFER	ABS L/GRAY	1	MAX-KD110/KD120
	AH64-01717C	KNOB-SUBWOOFER	ABS L/GRAY	1	MAX-KD100
21	AH67-00157B	LENS-SOUND	PMMA BLUE	1	
22	AH67-00156B	LENS-VOLUME	PMMA BLUE	1	
23	AH67-00160B	LENS-SUBWOOFER	PMMA BLUE	1	
24	AH64-70003K	BADGE-BRAND	ABS BLK	1	
25	AH64-01700E	CABINET-FRONT	MIPS D/GRAY	1	MAX-KD100
	AH64-01700F	CABINET-FRONT	MIPS L/GRAY	1	MAX-KD110
	AH64-01700H	CABINET-FRONT	MIPS L/GRAY	1	MAX-KD120
26	AH64-01709B	KNOB-OPEN	ABS L/GRAY	1	MAX-KD120
	AH64-01709C	KNOB-OPEN	ABS D/GRAY	1	MAX-KD100

No.	Code No.	Description	Specification	Q'ty	REMARK
	AH64-01709D	KNOB-OPEN	ABS L/GRAY	1	MAX-KD110
27	AH64-01714B	KNOB-DEMO	ABS L/GRAY	1	MAX-KD110/KD120
	AH64-01714C	KNOB-DEMO	ABS L/GRAY	1	MAX-KD100
28	AH67-00159A	LENS-STANDBY	PMMA CLEAR	1	
29	AH64-01708C	KNOB-POWER	ABS L/GRAY	1	MAX-KD100
	AH64-01708D	KNOB-POWER	ABS D/GRAY	1	MAX-KD110
	AH64-01708E	KNOB-POWER	ABS L/GRAY	1	MAX-KD120
30	AH64-01719B	KNOB-ECHO	ABS L/GRAY	1	MAX-KD120
	AH64-01719C	KNOB-ECHO	ABS D/GRAY	1	MAX-KD100
	AH64-01719D	KNOB-ECHO	ABS L/GRAY	1	MAX-KD110
31	AH67-00154D	LENS-FUNCTION	PMMA BLUE 1Kg+1g	1	
32	AH61-00967A	HOLDER-FUNCTION	ABS WHT	1	
33	AH67-00158C	LENS-DVD	PMMA MILKY	1	
34	AH61-00966A	HOLDER-DVD	ABS WHT	1	
35	AH67-00155B	LENS-P.SOUND	PMMA ORANGE	1	
36	AH61-00970A	HOLDER-P.SOUND	ABS WHT	1	
37	AH64-01712B	KNOB-ENTER	ABS L/GRAY	1	MAX-KD110/KD120
	AH64-01712C	KNOB-ENTER	ABS L/GRAY	1	MAX-KD100
38	AH95-50001A	LATCH-ASS'Y	POM	2	
39	AH61-80030A	DAMPER-ASS'Y	POM	2	
40	AH61-00522A	SPRING-EJECT.A	STS	1	
41	AH61-00523A	SPRING-EJECT.B	STS	1	
42	AH61-00414A	SUPPORT-RIVET	POM	3	
43	AH61-00021A	SUPPORT-PCB	ABS BLK	1	
44	AH63-00278A	COVER-PCB	EVA	1	
45	AH61-00685A	BRACKET-PCB	SECC 0.8T	1	
46	AH62-00044A	HEAT-SINK IC	AL	1	
47	AH61-00973A	BRKT-H/SINK.L	SECC 1.0T	1	
48	AH61-00977A	BRKT-H/SINK.R	SECC 1.0T	1	
49	AH62-00063E	HEAT-SINK MAIN	AL	1	
50	AH64-30416E	CABINET-BOTTOM	SECC 1.0T	1	
51	AH64-01703L	CABINET-REAR	SECC 0.8T	1	MAX-KD100/KD110
	AH64-01703M	CABINET-REAR	SECC 0.8T	1	MAX-KD120
52	AH61-01036B	COVER-REAR	ABS L/GRAY	1	
53	AH64-00616A	CABINET-TOP	PCM 0.625T	1	MAX-KD110/KD120
	AH64-00616C	CABINET-TOP	PCM 0.625T	1	MAX-KD100
54	AH61-10513A	BRACKET-PCB	PBS 0.3T	2	
A	6003-000276	SCREW-TAPTITE	BH 3*10 YEL	73	
B	6002-000126	SCREW-TAPTITE	FH 3*10 BLK	2	
C	6003-001464	SCREW-TAPTITE	BH 3*10 SIL	9	MAX-KD110/KD120
	6003-000275	SCREW-TAPTITE	BH 3*10 BLK	9	MAX-KD100
D	6002-000398	SCREW-TAPTITE	BH 3*6 YEL	5	
E	6003-001463	SCREW-TAPTITE	TH 4*6 YEL	4	
F	6003-001474	SCREW-TAPTITE	BH 3*30 YEL	2	
G	6003-001465	SCREW-TAPTITE	BWH 3*8 YEL(•'12)	1	
H	6003-000278	SCREW-TAPTITE	BH 3*14 YEL	2	

2-3 DVD Changer Mecha Exploded View and Parts list

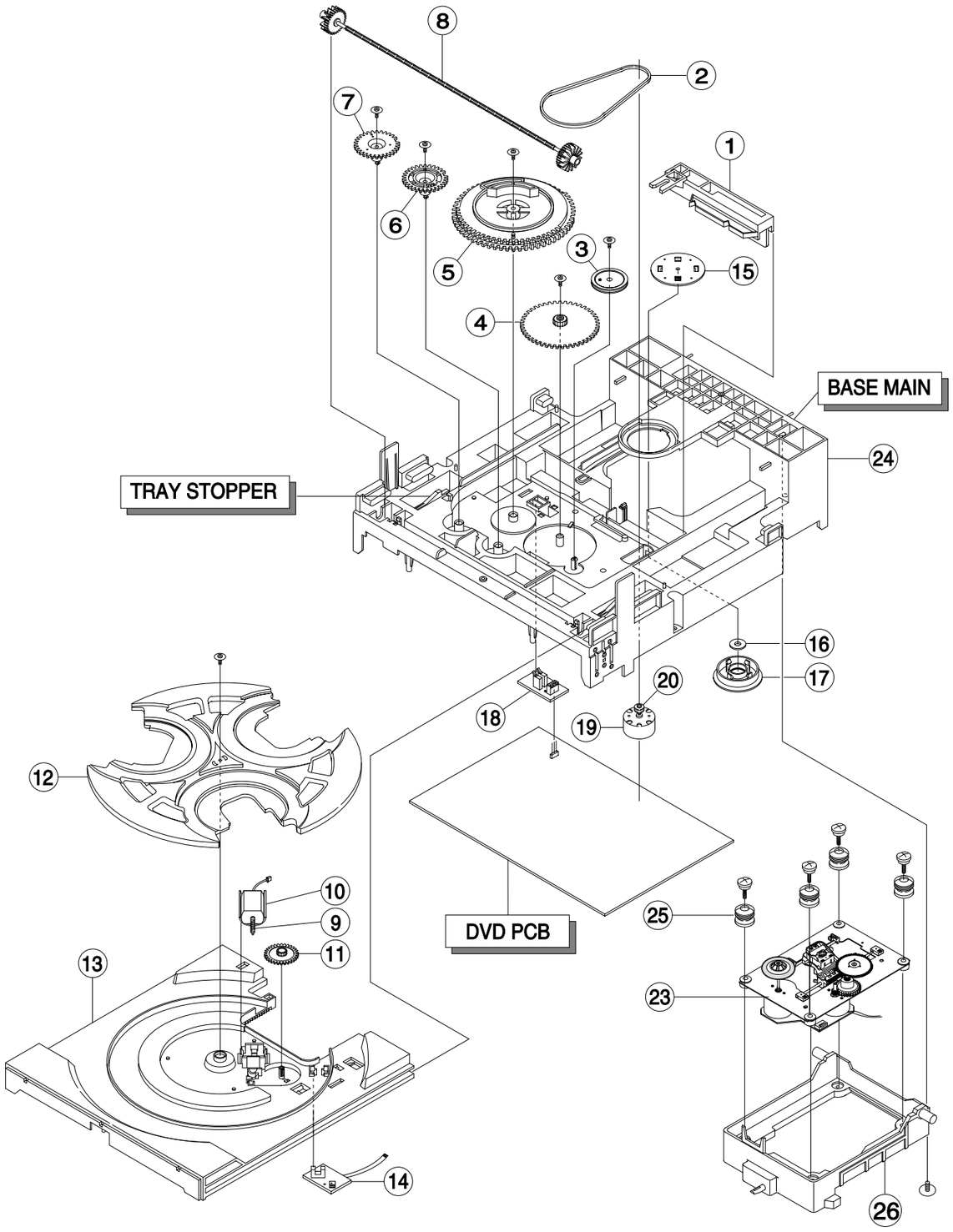

No.	Code No.	Description	Specification	Remarks
1	AH66-80022A	SLIDE-CAM	ABS NATURAL	
2	AH66-60034A	BELT-LOAD	CR BLK T1.5	
3	AH66-20186A	GEAR-PULLEY	POM WHT	
4	AH66-20187A	GEAR-LOAD	POM	
5	AH66-20188B	GEAR-CAM	POM WHT	
6	AH66-20189B	GEAR-TRAY	POM BLK	
7	AH66-20190B	GEAR-CONVERT	POM WHT	
8	AH66-20191A	GEAR-SYNCHRO	ABS NATURAL	
9	AH66-20192A	GEAR-WORM	POMWHT	
10	AH31-12001A	MOTOR-LOADING	FF-030PN	
11	AH66-20193A	GEAR-ROULETTE	TPE BLK	
12	AH63-00324A	TRAY-ROULETTE	ABS BLK	
13	AH63-00325A	TRAY-DISC	ABS BLK	
14	AH41-10456A	PCB-SENSOR	PENOL T1.6	
15	AH66-00164B	CLAMPER-UPPER	POM WHT	
16	AH61-00747A	BRKT-CHUCK	SECC T1.0	
17	AH66-00165A	CLAMPER-LOWER	POM WHT	
18	AH41-10455A	PCB-SW	PENOL T1.6	
19	AH31-10021A	MOTOR-DC	RF500TB-12560	
20	AH66-10008A	PULLEY-MOTOR	POM BLK	
23	AH59-00130A	DECK	CMS-S21MG6U	
24	AH61-00837A	BASE-MAIN	ABS NATURAL	
25	AH73-00025B	RUBBER-CD	BUTYL	
26	AH66-00168A	LEVER-LIFT	ABS+G/F	

2-4 SPEAKER Exploded View and Parts list

2-4-1 MAX-KD100

* CAUTION : It is used the bonding, connet NET FRAME(or FRONT PANEL ASS'Y) to CABINET ASS'Y.
So when the disassembly, take extreme care not to damage the SPEAKER.

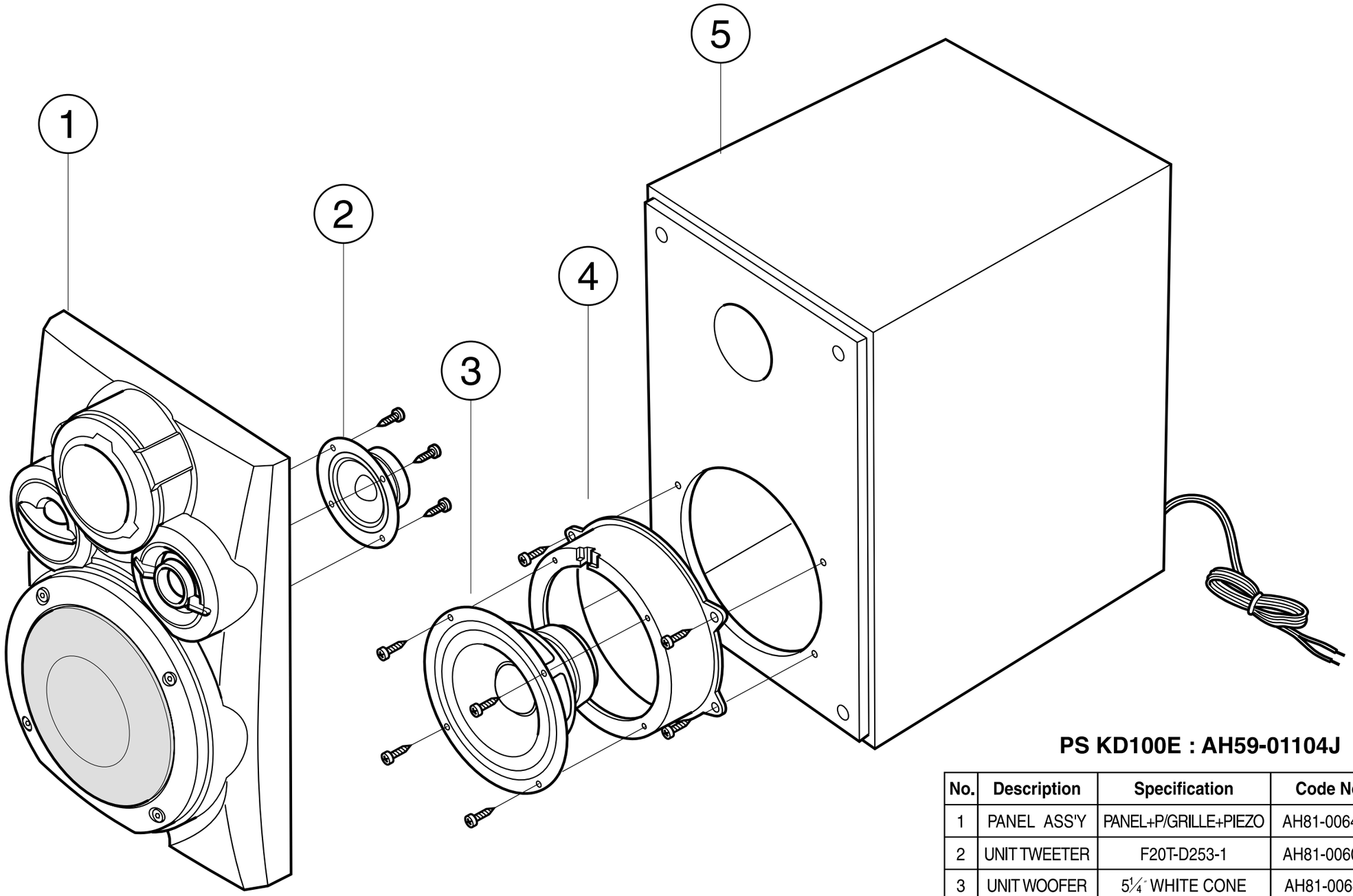

PS KD100E : AH59-01104J

No.	Description	Specification	Code No.	Q'TY
1	PANEL ASS'Y	PANEL+P/GRILLE+PIEZO	AH81-00640Q	1
2	UNIT TWEETER	F20T-D253-1	AH81-00609R	1
3	UNIT WOOFER	5¼" WHITE CONE	AH81-00640J	1
4	WOOFER RING	HIPS BLK	AH81-00640E	1
5	CABINET ASS'Y	PB 9t / 12t	AH81-00640G	1

2-4-2 MAX-KD110

* CAUTION : It is used the bonding, connet NET FRAME(or FRONT PANEL ASS'Y) to CABINET ASS'Y.
So when the disassembly, take extreme care not to damage the SPEAKER.

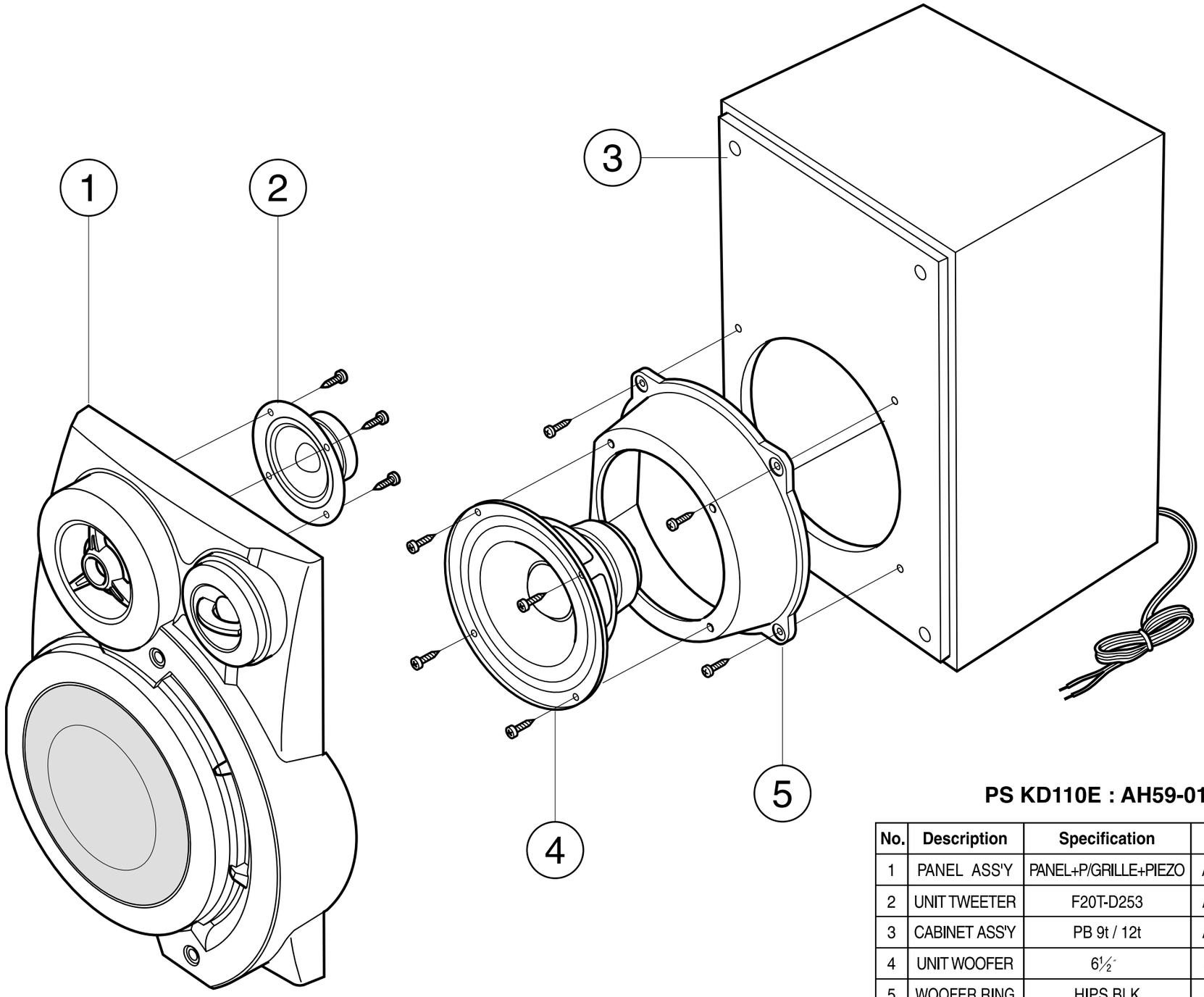

PS KD110E : AH59-01074G

No.	Description	Specification	Code No.	Q'TY
1	PANEL ASS'Y	PANEL+P/GRILLE+PIEZO	AH81-00637M	1
2	UNIT TWEETER	F20T-D253	AH81-00609Q	1
3	CABINET ASS'Y	PB 9t / 12t	AH81-00637G	1
4	UNIT WOOFER	6½"	AH81-00637J	1
5	WOOFER RING	HIPS BLK	AH81-00637E	1

2-4-3 MAX-KD120

* CAUTION : It is used the bonding, connet NET FRAME(or FRONT PANEL ASS'Y) to CABINET ASS'Y.
So when the disassembly, take extreme care not to damage the SPEAKER.

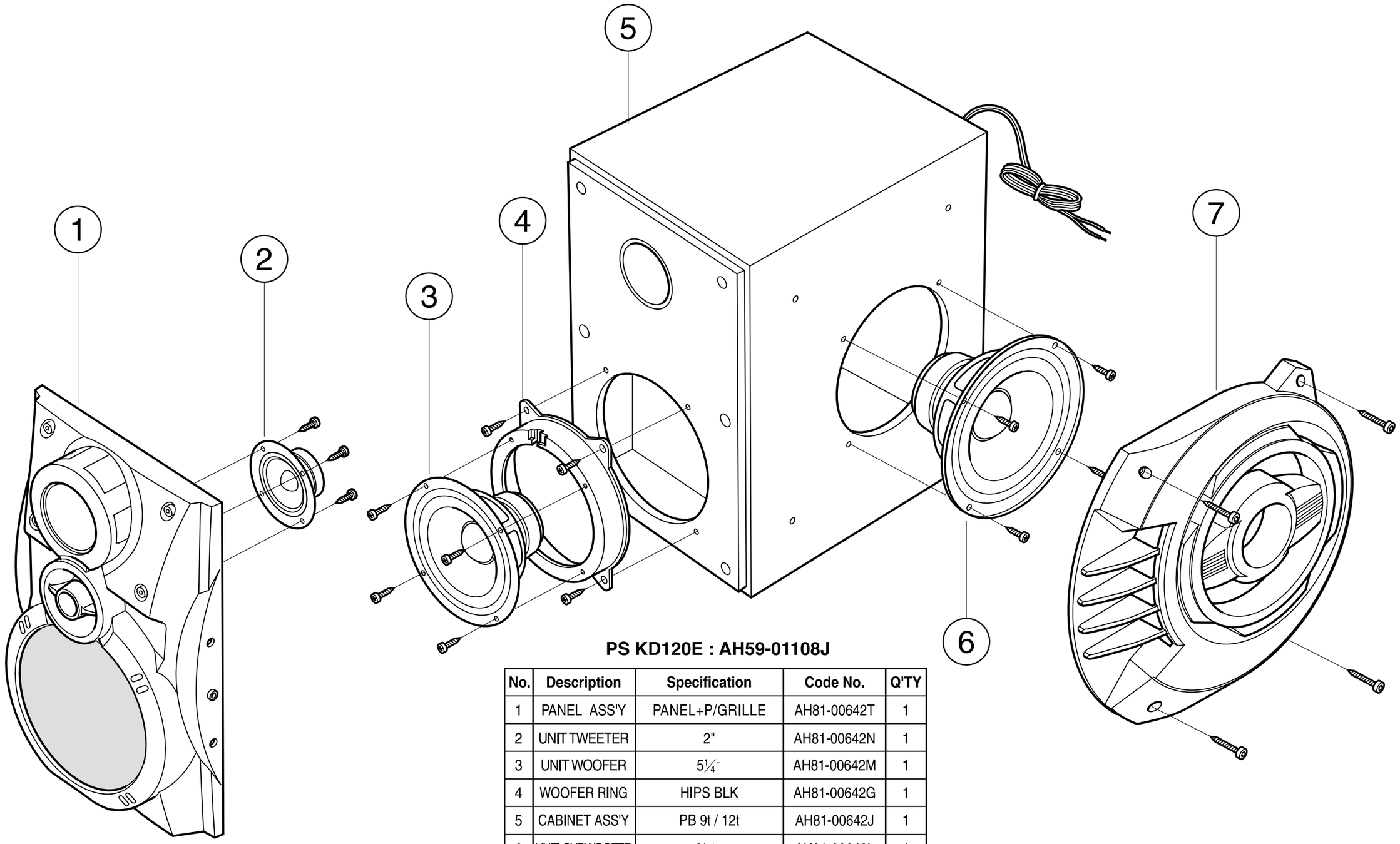

PS KD120E : AH59-01108J

No.	Description	Specification	Code No.	Q'TY
1	PANEL ASS'Y	PANEL+P/GRILLE	AH81-00642T	1
2	UNIT TWEETER	2"	AH81-00642N	1
3	UNIT WOOFER	5¼"	AH81-00642M	1
4	WOOFER RING	HIPS BLK	AH81-00642G	1
5	CABINET ASS'Y	PB 9t / 12t	AH81-00642J	1
6	UNIT SUBWOOFER	6½"	AH81-00642L	1
7	SIDE-PANEL	HIPS WHITE	AH81-00642E	1

1. Alignment and Adjustments

1-1. Tuner

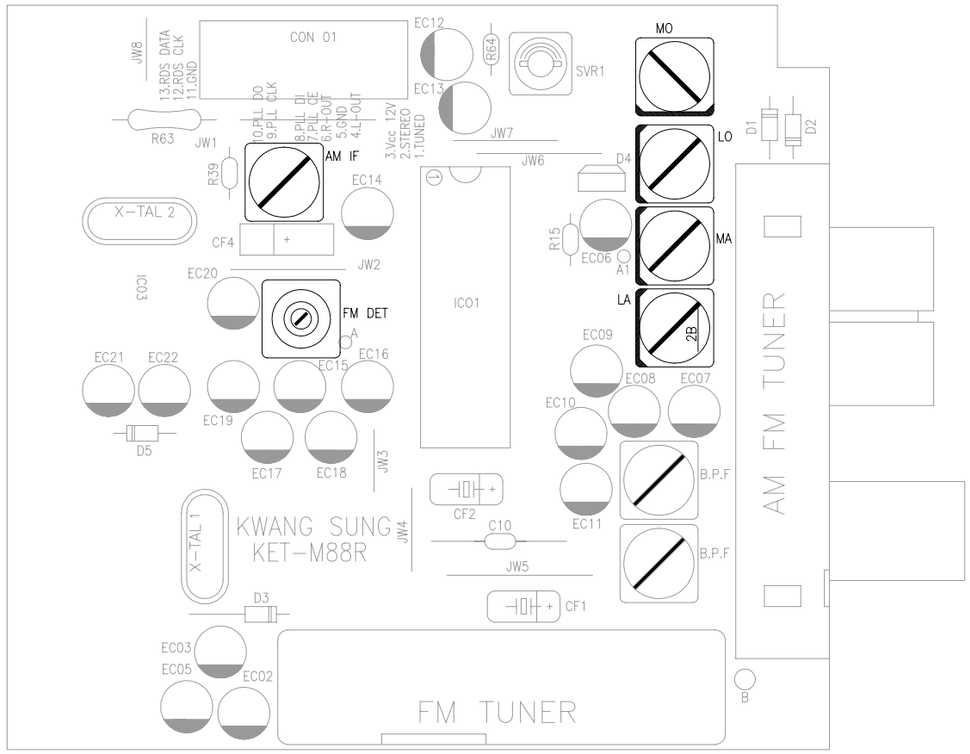

* Adjustment Location of Tuner PCB

ITEM	AM(MW) OSC	AM(MW) RF	LW OSC	LW RF
Received FREQ.	522~1611 KHz	594 KHz	146~290 KHz	150 KHz
Adjustment point	MO	MA	LO	LA
Output	1~7.0±0.5V	Maximum Output (Fig1-4)	2~7.0±0.5V	Maximum Output (Fig1-4)

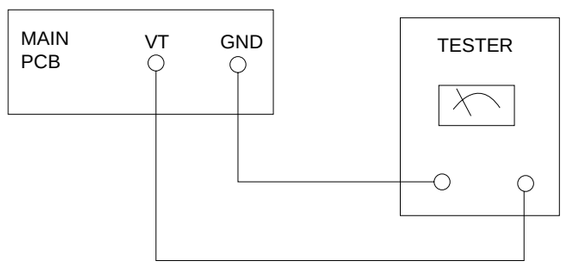

Fig 1-4 OSC Voltage

FM THD Adjustment	
SSG FREQ.	98 MHz
Adjustment point (FM DET)	FM DETECTOR COIL
Output	60 dB
Minumum Distortion (0.4% below) (Figure 1-1)	

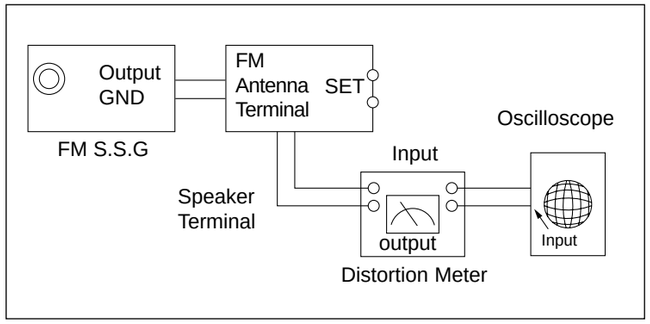

Figure1-1 IF CENTER and THD Adjustment

FM Search Level Adjustment	
SSG FREQ.	98 MHz
Adjustment point (SVR1)	BEACON SENSITIVITY SEMI-VR(10KΩ)
Output	28 dB(±2dB)
Adjust SVR1 so that “TUNED” of FLT is lighted (Figure 1-2)	

*Adjust FM S.S.G level to 28dB

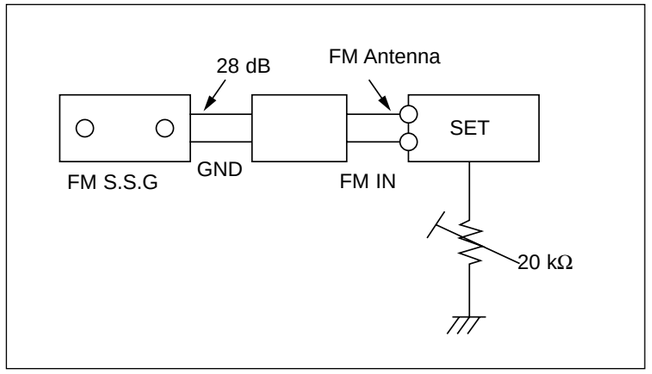

Figure1-2 FM Auto Search Level Adjustment

AM(MW) I.F Adjustment	
SSG FREQ.	450 kHz
Frequency	522 kHz
Adjustment point	AM IF
Maximum output (Figure 1-3)	

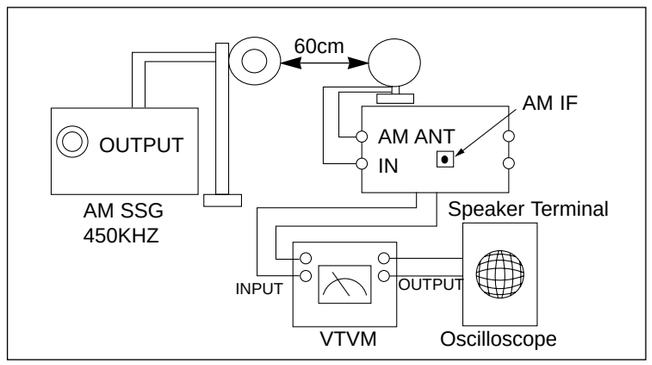

Figure1-3 AM I.F Adjustment

3. Electrical Parts List

Location no	Code no.	Description Specification	Remarks
		******* MAX-KD100 Parts List *******	
	3809-000171	CABLE-FLAT;30V,80C,200mm,16P,1.25mm,UL28	
	3809-001185	CABLE-FLAT;30V,80C,120MM,16P,1.25MM,UL28	
	3809-001222	CABLE-FLAT;30V,80C,50mm,11P1.25mm,UL289	
	3809-001332	CABLE-FLAT;30V,80C,140MM,16P,1.25MM,UL28	
	3809-001416	CABLE-FLAT;30V,80C,150MM,19P,1.25MM,UL28	
	3809-001450	CABLE-FLAT;30V,80C,150MM,23P,1.25MM,UL28	
	6801-001066	CARD-REGISTRATION;RUSSIA,CIS(RUSSIA),RUS	
	AH26-00235A	TRANS POWER;-,MAX-KD100,-,0,220V,##33/##	
	AH39-00257F	POWER CORD;MAX980,-,CP2,250V,2.5A,1830MM	
	AH39-00320C	CBF COAXIAL CABLE;MAX-L68,110REC,-,1007#	
	AH39-40001T	CABLE-RCA-VIDEO CABLE,BLK,2000;DP,1P-1P,	
	AH39-50001X	WIRE HARNESS;RING,1007#24,200MM,BLK	
	AH40-00009A	TUNER-PACK ASSY;KST-MB112LS1-30,FM/MW/LW	
	AH42-20001P	ANT LOOP;-,KS971120-01,18.5UH##10%,-	
	AH46-00020A	DISC-KARAOKE;-,-,DVD,MAX-KD100	
	AH59-01049A	**REMOCON-ASSY;MAX-WB650,-,-,-,62KEY,-,-,-**	
	AH59-01198A	**MICROPHONE;-,M-85,-,-,-,-,-,-,-,MIC FOR**	
	AH59-01104J	**SPEAKER SYSTEM;PSKD100E,-,-,-,-,-,-,XFO,**	
	AH81-00640A	A/S PART-SPK SYSTEM LEFT;PS B550E,-,-,SP	
	AH81-00640B	A/S PART-SPK SYSTEM RIGHT;PS B550E,-,-,S	
	AH81-00640C	A/S PART-PANEL FRONT;PS B550E,-,-,PANEL	
	AH81-00640D	A/S PART-PANEL FRONT R;PS B550E,-,-,PANE	
	AH81-00640E	A/S PART-WOOFER RING;PS B550E,-,-,WOOFER	
	AH81-00640F	A/S PART-GRILLE PUNCHING;PS B550E,-,-,GR	
	AH81-00640G	A/S PART-GRILLE PUNCHING;PS B550E,-,-,CA	
	AH81-00640H	A/S PART-CABINET ASS'Y R;PS B550E,-,-,CA	
	AH81-00640J	A/S PART-UNIT WOOFER;PS B550E,-,-,UNIT W	
	AH81-00640K	A/S PART-UNIT TWEETER;PS B550E,-,-,UNIT	
	AH81-00640L	A/S PART-CORD ASS'Y;PS B550E,-,-,CORD AS	
	AH81-00640M	A/S PART-CUSHION EPS TOP;PS B550E,-,-,CU	
	AH81-00640N	A/S PART-CUSHION EPS BTM;PS B550E,-,-,CU	
	AH59-01162A	**DECK;-,MAX-KD100,-,-,-,-,-,-**	
DCN5	3711-003379	CONNECTOR-HEADER;NOWALL,3P,1R,2.5mm,STRA	
	AH92-01831A	**ASSY PCB;MAX-KD100,-**	
RZD1	0403-000352	DIODE-ZENER;UZ4.7BM,4.7V,4.4-5.0V,500mW,	
	0403-000357	DIODE-ZENER;UZ5.6BM,5.6V,5.4-5.8V,500mW,	
DIC1	1003-001418	IC-MOTOR DRIVER;FAN8082,DIP,8P,-,-,1MA,S	
DIC2	1003-001418	IC-MOTOR DRIVER;FAN8082,DIP,8P,-,-,1MA,S	
DXT1	2801-000261	CRYSTAL-UNIT;33.8688MHz,50ppm,28-AAA,12p	
ZX71	2801-003554	CRYSTAL-UNIT;27MHz,10ppm,28-AAM,12pF,40o	
AX1	2801-003716	CRYSTAL-UNIT;9.6MHz,50ppm,28-AAM,20pF,70	
UX1	2801-004256	CRYSTAL-UNIT;33MHZ,30PPM,28-AAE,12 PF,80	OLD PART
UX1	2801-004306	CRYSTAL-UNIT;40MHZ,20PPM,28-AAE,20 PF,80	NEW PART(MP3)
DCN3	3708-000307	CONNECTOR-FPC/FFC/PIC;7P,1.25mm,ANGLE,SN	
ACN21	3708-001195	CONNECTOR-FPC/FFC/PIC;27P,1.25mm,STRAIGH	
RCN1	3708-001464	CONNECTOR-FPC/FFC/PIC;24P,1mm,STRAIGHT,S	
PCN1	3711-000629	CONNECTOR-HEADER;BOX,11P,2R,2.5MM,STRAIG	
VCN2	3711-000827	CONNECTOR-HEADER;BOX,2P,1R,2mm,STRAIGHT,	
TCN2	3711-000907	CONNECTOR-HEADER;BOX,3P,1R,2mm,STRAIGHT,	
ACN22	3711-000907	CONNECTOR-HEADER;BOX,3P,1R,2mm,STRAIGHT,	
DCN4	AH39-00367A	LEAD CONNECTOR ASSY;6P,100MM,#1007,-,6P,	
	AH39-50001M	WIRE HARNESS;RING,1007#24,350MM,BLK	
DD1	0407-000116	DIODE-ARRAY;DAP202K,80V,100mA,CK2-3,SOT-	
RD1	0407-000116	DIODE-ARRAY;DAP202K,80V,100mA,CK2-3,SOT-	
VQ1	0501-000314	TR-SMALL SIGNAL;KSA812,PNP,150mW,SOT-23,	
TQ2	0501-000314	TR-SMALL SIGNAL;KSA812,PNP,150mW,SOT-23,	
TQ1	0501-000341	TR-SMALL SIGNAL;KSC1623-L,NPN,200mW,SOT-	
AQ28	0501-000341	TR-SMALL SIGNAL;KSC1623-L,NPN,200mW,SOT-	
AQ27	0501-000341	TR-SMALL SIGNAL;KSC1623-L,NPN,200mW,SOT-	
RQ2	0501-000632	TR-SMALL SIGNAL;2SB1197K,PNP,200mW,SOT-2	
RQ1	0501-000632	TR-SMALL SIGNAL;2SB1197K,PNP,200mW,SOT-2	
AQ25	0504-000152	TR-DIGITAL;KSR2101,PNP,200mW,4.7K/4.7K,S	
TIC2	0801-000008	IC-CMOS LOGIC;74HC245,TRANSCEIVER,SOP,20	
TIC1	0801-000008	IC-CMOS LOGIC;74HC245,TRANSCEIVER,SOP,20	
AIC5	0801-000475	IC-CMOS LOGIC;74HCT157,MUTIPLEXER,SOP,16	
AIC25	0801-000475	IC-CMOS LOGIC;74HCT157,MUTIPLEXER,SOP,16	
FIC3	0801-000508	IC-CMOS LOGIC;74HCT374,D FLIP-FLOP,SOP,2	
FIC6	0801-001042	IC-CMOS LOGIC;74HC157,MULTIPLEXER,SOP,16	
FIC5	0801-001042	IC-CMOS LOGIC;74HC157,MULTIPLEXER,SOP,16	
UIC5	0801-002770	IC-CMOS LOGIC;MC74VHC1GU04,UNBUFFERED IN	
UIC4	0803-000321	IC-TTL;74LS175,D FLIP-FLOP,SOP,16P,15	
TIC3	0803-000898	IC-TTL;74F244,BUFFER/DRIVERS,SOP,20,3	
UIC2	0803-001040	IC-TTL;74LS14,SCHMITT INVERTER,SOP,14	
UIC1	0903-001337	IC-MICROCONTROLLER;AM186EM,16BIT,PQFP,10	OLD PART
UIC1	0903-001331	IC-MICROCONTROLLER;TG2000CMD,16BIT,PQFP,10	NEW PART(MP3)
AIC14	1002-001188	IC-D/A CONVERTER;PCM1716,24BIT,SSOP,28P,	
DIC3	1003-001450	IC-MOTOR DRIVER;BA5954FM,SOP,28P,300MIL,	
SIC2	1105-001300	IC-DRAM;224162,256Kx16Bit,SOJ,40P,400M	
FIC8	1105-001300	IC-DRAM;224162,256Kx16Bit,SOJ,40P,400M	
FIC7	1105-001300	IC-DRAM;224162,256Kx16Bit,SOJ,40P,400M	

Location no	Code no.	Description Specification	Remarks
FIC1	1105-001375	IC-DRAM;-,4X1MX16BIT,TSOP(II),54P,400M	
MIC2	1107-001203	IC-FLASH MEMORY;49F512,64Kx8Bit,PLCC,32P	
UIC3	1107-001444	IC-FLASH MEMORY;M29F800DT,1024X8BIT,TSOP	
AIC11	1201-000461	IC-OP AMP;4558,SOP,8P,150MIL,DUAL,20V/mV	
RIC1	1201-001790	IC-RF AMP;SP3721A,TQFP,64P,10MIL,SINGLE,	
RIC2	1201-001842	IC-OP AMP;TL3472CD,SO,TP,8P,-,DUAL,-,PAL	
MIC1	1203-001369	IC-VOL. DETECTOR;61AN1902,SOT-23,3P,63MI	
DIC4	1203-002390	IC-POSI.FIXED REG.;NJM7805,TO-252,3P,-,P	
ZIC2	1203-002935	IC-POSI.ADJUST REG.;AIC1117ACE,TO-252,3P	
ZIC3	1204-001919	IC-DECODER;ZIVA4.1 B0,QFP,208P,28X28MM,P	
SIC1	1204-001936	IC-DECODER;M5705,LQFP,176P,24X24MM,PALST	
AIC13	1209-001485	IC-SYNTHESIZER;SAM9773,TQFP,80P,14X14MM,	
PL6	2007-000029	R-CHIP;0ohm,5%,1/8W,TP,2012	
PL5	2007-000029	R-CHIP;0ohm,5%,1/8W,TP,2012	
DL4	2007-000029	R-CHIP;0ohm,5%,1/8W,TP,2012	
RR7	2007-000070	R-CHIP;0ohm,5%,1/10W,TP,1608	
RR6	2007-000070	R-CHIP;0ohm,5%,1/10W,TP,1608	
RR27	2007-000070	R-CHIP;0ohm,5%,1/10W,TP,1608	
RR21	2007-000070	R-CHIP;0ohm,5%,1/10W,TP,1608	
SR13	2007-000070	R-CHIP;0ohm,5%,1/10W,TP,1608	
SR19	2007-000070	R-CHIP;0ohm,5%,1/10W,TP,1608	
UR23	2007-000070	R-CHIP;0ohm,5%,1/10W,TP,1608	
UR42	2007-000070	R-CHIP;0ohm,5%,1/10W,TP,1608	
RR2	2007-000070	R-CHIP;0ohm,5%,1/10W,TP,1608	
DR29	2007-000070	R-CHIP;0ohm,5%,1/10W,TP,1608	
DR43	2007-000070	R-CHIP;0ohm,5%,1/10W,TP,1608	
FR11	2007-000070	R-CHIP;0ohm,5%,1/10W,TP,1608	
FR2	2007-000070	R-CHIP;0ohm,5%,1/10W,TP,1608	
RR11	2007-000070	R-CHIP;0ohm,5%,1/10W,TP,1608	
FR9	2007-000070	R-CHIP;0ohm,5%,1/10W,TP,1608	
FR7	2007-000070	R-CHIP;0ohm,5%,1/10W,TP,1608	
FR5	2007-000070	R-CHIP;0ohm,5%,1/10W,TP,1608	
UR11	2007-000072	R-CHIP;47ohm,5%,1/10W,TP,1608	
FR8	2007-000072	R-CHIP;47ohm,5%,1/10W,TP,1608	
FR6	2007-000072	R-CHIP;47ohm,5%,1/10W,TP,1608	
TR28	2007-000074	R-CHIP;100ohm,5%,1/10W,TP,1608	
AR142	2007-000074	R-CHIP;100ohm,5%,1/10W,TP,1608	
UR36	2007-000075	R-CHIP;220ohm,5%,1/10W,TP,1608	
UR25	2007-000075	R-CHIP;220ohm,5%,1/10W,TP,1608	
UR24	2007-000075	R-CHIP;220ohm,5%,1/10W,TP,1608	
RR32	2007-000075	R-CHIP;220ohm,5%,1/10W,TP,1608	
TR30	2007-000075	R-CHIP;220ohm,5%,1/10W,TP,1608	
UR17	2007-000113	R-CHIP;33ohm,5%,1/10W,TP,1608	OLD PART
UR17	2007-000074	R-CHIP;100ohm,5%,1/10W,TP,1608	NEW PART(MP3)
SR34	2007-000076	R-CHIP;330ohm,5%,1/10W,TP,1608	
SR35	2007-000076	R-CHIP;330ohm,5%,1/10W,TP,1608	
SR36	2007-000076	R-CHIP;330ohm,5%,1/10W,TP,1608	
SR37	2007-000076	R-CHIP;330ohm,5%,1/10W,TP,1608	
SR32	2007-000076	R-CHIP;330ohm,5%,1/10W,TP,1608	
AR101	2007-000076	R-CHIP;330ohm,5%,1/10W,TP,1608	
AR102	2007-000076	R-CHIP;330ohm,5%,1/10W,TP,1608	
AR119	2007-000076	R-CHIP;330ohm,5%,1/10W,TP,1608	
AR120	2007-000076	R-CHIP;330ohm,5%,1/10W,TP,1608	
UR19	2007-000077	R-CHIP;470ohm,5%,1/10W,TP,1608	
MR4	2007-000078	R-CHIP;1Kohm,5%,1/10W,TP,1608	
RR12	2007-000078	R-CHIP;1Kohm,5%,1/10W,TP,1608	
RR3	2007-000078	R-CHIP;1Kohm,5%,1/10W,TP,1608	
SR22	2007-000078	R-CHIP;1Kohm,5%,1/10W,TP,1608	
ZR55	2007-000078	R-CHIP;1Kohm,5%,1/10W,TP,1608	
ZR58	2007-000078	R-CHIP;1Kohm,5%,1/10W,TP,1608	
MR3	2007-000078	R-CHIP;1Kohm,5%,1/10W,TP,1608	
DR14	2007-000078	R-CHIP;1Kohm,5%,1/10W,TP,1608	
DR15	2007-000078	R-CHIP;1Kohm,5%,1/10W,TP,1608	
DR3	2007-000078	R-CHIP;1Kohm,5%,1/10W,TP,1608	
DR6	2007-000078	R-CHIP;1Kohm,5%,1/10W,TP,1608	
DR5	2007-000078	R-CHIP;1Kohm,5%,1/10W,TP,1608	
DR4	2007-000078	R-CHIP;1Kohm,5%,1/10W,TP,1608	
SR9	2007-000082	R-CHIP;3.3Kohm,5%,1/10W,TP,1608	
SR17	2007-000082	R-CHIP;3.3Kohm,5%,1/10W,TP,1608	
SR11	2007-000082	R-CHIP;3.3Kohm,5%,1/10W,TP,1608	
SR10	2007-000082	R-CHIP;3.3Kohm,5%,1/10W,TP,1608	
DR21	2007-000082	R-CHIP;3.3Kohm,5%,1/10W,TP,1608	
UR41	2007-000084	R-CHIP;4.7Kohm,5%,1/10W,TP,1608	
UR20	2007-000084	R-CHIP;4.7Kohm,5%,1/10W,TP,1608	
SR5	2007-000084	R-CHIP;4.7Kohm,5%,1/10W,TP,1608	
ZR1	2007-000084	R-CHIP;4.7Kohm,5%,1/10W,TP,1608	
ZR2	2007-000084	R-CHIP;4.7Kohm,5%,1/10W,TP,1608	
ZR56	2007-000084	R-CHIP;4.7Kohm,5%,1/10W,TP,1608	
ZR57	2007-000084	R-CHIP;4.7Kohm,5%,1/10W,TP,1608	
DR7	2007-000084	R-CHIP;4.7Kohm,5%,1/10W,TP,1608	
FR1	2007-000084	R-CHIP;4.7Kohm,5%,1/10W,TP,1608	
FR3	2007-000084	R-CHIP;4.7Kohm,5%,1/10W,TP,1608	
MR2	2007-000084	R-CHIP;4.7Kohm,5%,1/10W,TP,1608	
MR5	2007-000084	R-CHIP;4.7Kohm,5%,1/10W,TP,1608	
SR12	2007-000084	R-CHIP;4.7Kohm,5%,1/10W,TP,1608	
SR18	2007-000084	R-CHIP;4.7Kohm,5%,1/10W,TP,1608	
RR26	2007-000088	R-CHIP;7.5Kohm,5%,1/10W,TP,1608	
R43	2007-000090	R-CHIP;10Kohm,5%,1/10W,TP,1608	
RR15	2007-000090	R-CHIP;10Kohm,5%,1/10W,TP,1608	

Location no	Code no.	Description	Specification	Remarks
RR16	2007-000090	R-CHIP;10Kohm,5%,1/10W,TP,1608		
SR28	2007-000090	R-CHIP;10Kohm,5%,1/10W,TP,1608		
TR22	2007-000090	R-CHIP;10Kohm,5%,1/10W,TP,1608		
UR22	2007-000090	R-CHIP;10Kohm,5%,1/10W,TP,1608		
UR38	2007-000090	R-CHIP;10Kohm,5%,1/10W,TP,1608		
VR1	2007-000090	R-CHIP;10Kohm,5%,1/10W,TP,1608		
DR26	2007-000090	R-CHIP;10Kohm,5%,1/10W,TP,1608		
AR103	2007-000090	R-CHIP;10Kohm,5%,1/10W,TP,1608		
AR104	2007-000090	R-CHIP;10Kohm,5%,1/10W,TP,1608		
AR107	2007-000090	R-CHIP;10Kohm,5%,1/10W,TP,1608		
AR108	2007-000090	R-CHIP;10Kohm,5%,1/10W,TP,1608		
DR25	2007-000090	R-CHIP;10Kohm,5%,1/10W,TP,1608		
DR20	2007-000090	R-CHIP;10Kohm,5%,1/10W,TP,1608		
AR110	2007-000090	R-CHIP;10Kohm,5%,1/10W,TP,1608		
AR109	2007-000090	R-CHIP;10Kohm,5%,1/10W,TP,1608		
DR19	2007-000091	R-CHIP;12Kohm,5%,1/10W,TP,1608		
SR7	2007-000093	R-CHIP;20Kohm,5%,1/10W,TP,1608		
TR2	2007-000094	R-CHIP;22Kohm,5%,1/10W,TP,1608		
TR3	2007-000094	R-CHIP;22Kohm,5%,1/10W,TP,1608		
TR4	2007-000094	R-CHIP;22Kohm,5%,1/10W,TP,1608		
TR8	2007-000094	R-CHIP;22Kohm,5%,1/10W,TP,1608		
TR9	2007-000094	R-CHIP;22Kohm,5%,1/10W,TP,1608		
TR12	2007-000094	R-CHIP;22Kohm,5%,1/10W,TP,1608		
AR131	2007-000094	R-CHIP;22Kohm,5%,1/10W,TP,1608		
MR1	2007-000094	R-CHIP;22Kohm,5%,1/10W,TP,1608		
TR1	2007-000094	R-CHIP;22Kohm,5%,1/10W,TP,1608		
TR10	2007-000094	R-CHIP;22Kohm,5%,1/10W,TP,1608		
TR11	2007-000094	R-CHIP;22Kohm,5%,1/10W,TP,1608		
SR14	2007-000097	R-CHIP;47Kohm,5%,1/10W,TP,1608		
SR27	2007-000097	R-CHIP;47Kohm,5%,1/10W,TP,1608		
UR10	2007-000097	R-CHIP;47Kohm,5%,1/10W,TP,1608		
UR9	2007-000097	R-CHIP;47Kohm,5%,1/10W,TP,1608		
DR28	2007-000097	R-CHIP;47Kohm,5%,1/10W,TP,1608		
DR11	2007-000097	R-CHIP;47Kohm,5%,1/10W,TP,1608		
DR12	2007-000097	R-CHIP;47Kohm,5%,1/10W,TP,1608		
DR13	2007-000097	R-CHIP;47Kohm,5%,1/10W,TP,1608		
DR17	2007-000097	R-CHIP;47Kohm,5%,1/10W,TP,1608		
RR25	2007-000098	R-CHIP;56Kohm,5%,1/10W,TP,1608		
RR28	2007-000107	R-CHIP;470Kohm,5%,1/10W,TP,1608		
ZR71	2007-000109	R-CHIP;1Mohm,5%,1/10W,TP,1608		
UR18	2007-000109	R-CHIP;1Mohm,5%,1/10W,TP,1608		
AR141	2007-000109	R-CHIP;1Mohm,5%,1/10W,TP,1608		
VR28	2007-000113	R-CHIP;33ohm,5%,1/10W,TP,1608		
VR30	2007-000113	R-CHIP;33ohm,5%,1/10W,TP,1608		
VR32	2007-000113	R-CHIP;33ohm,5%,1/10W,TP,1608		
VR34	2007-000113	R-CHIP;33ohm,5%,1/10W,TP,1608		
UR8	2007-000113	R-CHIP;33ohm,5%,1/10W,TP,1608		
UR7	2007-000113	R-CHIP;33ohm,5%,1/10W,TP,1608		
UR6	2007-000113	R-CHIP;33ohm,5%,1/10W,TP,1608		
UR5	2007-000113	R-CHIP;33ohm,5%,1/10W,TP,1608		
ZR51	2007-000113	R-CHIP;33ohm,5%,1/10W,TP,1608		
ZR50	2007-000113	R-CHIP;33ohm,5%,1/10W,TP,1608		
ZR45	2007-000113	R-CHIP;33ohm,5%,1/10W,TP,1608		
ZR44	2007-000113	R-CHIP;33ohm,5%,1/10W,TP,1608		
ZR43	2007-000113	R-CHIP;33ohm,5%,1/10W,TP,1608		
ZR42	2007-000113	R-CHIP;33ohm,5%,1/10W,TP,1608		
ZR38	2007-000113	R-CHIP;33ohm,5%,1/10W,TP,1608		
VR35	2007-000113	R-CHIP;33ohm,5%,1/10W,TP,1608		
UR40	2007-000113	R-CHIP;33ohm,5%,1/10W,TP,1608		
SR15	2007-000113	R-CHIP;33ohm,5%,1/10W,TP,1608		
RR9	2007-000113	R-CHIP;33ohm,5%,1/10W,TP,1608		
RR8	2007-000113	R-CHIP;33ohm,5%,1/10W,TP,1608		
RR5	2007-000113	R-CHIP;33ohm,5%,1/10W,TP,1608		
FR4	2007-000113	R-CHIP;33ohm,5%,1/10W,TP,1608		
FR10	2007-000113	R-CHIP;33ohm,5%,1/10W,TP,1608		
DR18	2007-000113	R-CHIP;33ohm,5%,1/10W,TP,1608		
AR143	2007-000113	R-CHIP;33ohm,5%,1/10W,TP,1608		
UR4	2007-000113	R-CHIP;33ohm,5%,1/10W,TP,1608		
UR39	2007-000113	R-CHIP;33ohm,5%,1/10W,TP,1608		
UR30	2007-000113	R-CHIP;33ohm,5%,1/10W,TP,1608		
UR3	2007-000113	R-CHIP;33ohm,5%,1/10W,TP,1608		
UR1	2007-000113	R-CHIP;33ohm,5%,1/10W,TP,1608		
UR12	2007-000113	R-CHIP;33ohm,5%,1/10W,TP,1608		
UR2	2007-000113	R-CHIP;33ohm,5%,1/10W,TP,1608		
UR21	2007-000113	R-CHIP;33ohm,5%,1/10W,TP,1608		
DR9	2007-000118	R-CHIP;390ohm,5%,1/10W,TP,1608		
DR8	2007-000118	R-CHIP;390ohm,5%,1/10W,TP,1608		
DR10	2007-000118	R-CHIP;390ohm,5%,1/10W,TP,1608		
RR33	2007-000119	R-CHIP;560ohm,5%,1/10W,TP,1608		
ZR54	2007-000122	R-CHIP;1.2Kohm,5%,1/10W,TP,1608		
SR1	2007-000122	R-CHIP;1.2Kohm,5%,1/10W,TP,1608		
RR14	2007-000122	R-CHIP;1.2Kohm,5%,1/10W,TP,1608		
RR13	2007-000122	R-CHIP;1.2Kohm,5%,1/10W,TP,1608		
LR2	2007-000124	R-CHIP;2.2Kohm,5%,1/10W,TP,1608		
LR1	2007-000124	R-CHIP;2.2Kohm,5%,1/10W,TP,1608		
SR2	2007-000131	R-CHIP;91Kohm,5%,1/10W,TP,1608		
SR3	2007-000131	R-CHIP;91Kohm,5%,1/10W,TP,1608		
DR27	2007-000134	R-CHIP;33Kohm,5%,1/10W,TP,1608		
DR16	2007-000134	R-CHIP;33Kohm,5%,1/10W,TP,1608		
RR10	2007-000308	R-CHIP;10ohm,5%,1/8W,TP,2012		
RR1	2007-000308	R-CHIP;10ohm,5%,1/8W,TP,2012		
PR1	2007-000308	R-CHIP;10ohm,5%,1/8W,TP,2012		
VR26	2007-000309	R-CHIP;10ohm,5%,1/10W,TP,1608		

Location no	Code no.	Description	Specification	Remarks
SR23	2007-000309	R-CHIP;10ohm,5%,1/10W,TP,1608		
AR92	2007-000309	R-CHIP;10ohm,5%,1/10W,TP,1608		
AR91	2007-000309	R-CHIP;10ohm,5%,1/10W,TP,1608		
VR2	2007-000402	R-CHIP;150ohm,5%,1/10W,TP,1608		
AR132	2007-000417	R-CHIP;15ohm,5%,1/4W,TP,3216		
DR32	2007-000483	R-CHIP;1ohm,5%,1/8W,TP,2012		
DR31	2007-000483	R-CHIP;1ohm,5%,1/8W,TP,2012		
DR24	2007-000483	R-CHIP;1ohm,5%,1/8W,TP,2012		
DR23	2007-000483	R-CHIP;1ohm,5%,1/8W,TP,2012		
ZR60	2007-000608	R-CHIP;240ohm,5%,1/10W,TP,1608		
ZR59	2007-000608	R-CHIP;240ohm,5%,1/10W,TP,1608		
SR21	2007-000962	R-CHIP;5.1Kohm,1%,1/10W,TP,1608		
SR29	2007-000962	R-CHIP;5.1Kohm,1%,1/10W,TP,1608		
SR8	2007-001010	R-CHIP;51Kohm,5%,1/10W,TP,1608		
AR122	2007-001010	R-CHIP;51Kohm,5%,1/10W,TP,1608		
AR121	2007-001010	R-CHIP;51Kohm,5%,1/10W,TP,1608		
UR16	2007-001134	R-CHIP;68ohm,5%,1/10W,TP,1608		
UR28	2007-001134	R-CHIP;68ohm,5%,1/10W,TP,1608		
UR29	2007-001134	R-CHIP;68ohm,5%,1/10W,TP,1608		
UR31	2007-001134	R-CHIP;68ohm,5%,1/10W,TP,1608		
VR3	2007-001134	R-CHIP;68ohm,5%,1/10W,TP,1608		
FR12	2007-001134	R-CHIP;68ohm,5%,1/10W,TP,1608		
FR13	2007-001134	R-CHIP;68ohm,5%,1/10W,TP,1608		
UR13	2007-001134	R-CHIP;68ohm,5%,1/10W,TP,1608		
UR14	2007-001134	R-CHIP;68ohm,5%,1/10W,TP,1608		
UR15	2007-001134	R-CHIP;68ohm,5%,1/10W,TP,1608		
ZR46	2007-001167	R-CHIP;75ohm,5%,1/10W,TP,1608		
RR4	2007-001179	R-CHIP;8.2Kohm,5%,1/10W,TP,1608		
RR30	2007-001179	R-CHIP;8.2Kohm,5%,1/10W,TP,1608		
RN7	2011-000475	R-NETWORK;33OHM,5%,1/16W,L,CHIP,8P,TP,32		
RN8	2011-000475	R-NETWORK;33OHM,5%,1/16W,L,CHIP,8P,TP,32		
RN9	2011-000475	R-NETWORK;33OHM,5%,1/16W,L,CHIP,8P,TP,32		
SN1	2011-000475	R-NETWORK;33OHM,5%,1/16W,L,CHIP,8P,TP,32		
TN3	2011-000475	R-NETWORK;33OHM,5%,1/16W,L,CHIP,8P,TP,32		
TN5	2011-000475	R-NETWORK;33OHM,5%,1/16W,L,CHIP,8P,TP,32		
RN1	2011-000475	R-NETWORK;33OHM,5%,1/16W,L,CHIP,8P,TP,32		
RN2	2011-000475	R-NETWORK;33OHM,5%,1/16W,L,CHIP,8P,TP,32		
RN3	2011-000475	R-NETWORK;33OHM,5%,1/16W,L,CHIP,8P,TP,32		
RN4	2011-000475	R-NETWORK;33OHM,5%,1/16W,L,CHIP,8P,TP,32		
RN5	2011-000475	R-NETWORK;33OHM,5%,1/16W,L,CHIP,8P,TP,32		
RN6	2011-000475	R-NETWORK;33OHM,5%,1/16W,L,CHIP,8P,TP,32		
TN4	2011-000585	R-NETWORK;47OHM,5%,1/16W,L,CHIP,8P,TP		
TN13	2011-000816	R-NETWORK;100OHM,5%,1/16W,L,CHIP,8P,TP		
TN12	2011-000816	R-NETWORK;100OHM,5%,1/16W,L,CHIP,8P,TP		
TN11	2011-000816	R-NETWORK;100OHM,5%,1/16W,L,CHIP,8P,TP		
TN10	2011-000816	R-NETWORK;100OHM,5%,1/16W,L,CHIP,8P,TP		
TN7	2011-001011	R-NETWORK;10KOHM,5%,1/16W,L,CHIP,8P,TP		
TN8	2011-001011	R-NETWORK;10KOHM,5%,1/16W,L,CHIP,8P,TP		
TN9	2011-001011	R-NETWORK;10KOHM,5%,1/16W,L,CHIP,8P,TP		
TN6	2011-001011	R-NETWORK;10KOHM,5%,1/16W,L,CHIP,8P,TP		
TN2	2011-001011	R-NETWORK;10KOHM,5%,1/16W,L,CHIP,8P,TP		
TN1	2011-001011	R-NETWORK;10KOHM,5%,1/16W,L,CHIP,8P,TP		
AC108	2203-000140	C-CERAMIC,CHIP;1.5nF,10%,50V,X7R,TP,1608		
AC107	2203-000140	C-CERAMIC,CHIP;1.5nF,10%,50V,X7R,TP,1608		
AC120	2203-000236	C-CERAMIC,CHIP;0.1NF,5%,50V,C0G,TP,1608		
DC16	2203-000236	C-CERAMIC,CHIP;0.1NF,5%,50V,C0G,TP,1608		
DC9	2203-000236	C-CERAMIC,CHIP;0.1NF,5%,50V,C0G,TP,1608		
RC21	2203-000236	C-CERAMIC,CHIP;0.1NF,5%,50V,C0G,TP,1608		
AC119	2203-000236	C-CERAMIC,CHIP;0.1NF,5%,50V,C0G,TP,1608		
AC105	2203-000236	C-CERAMIC,CHIP;0.1NF,5%,50V,C0G,TP,1608		
AC106	2203-000236	C-CERAMIC,CHIP;0.1NF,5%,50V,C0G,TP,1608		
AC113	2203-000236	C-CERAMIC,CHIP;0.1NF,5%,50V,C0G,TP,1608		
AC114	2203-000236	C-CERAMIC,CHIP;0.1NF,5%,50V,C0G,TP,1608		
DC5	2203-000257	C-CERAMIC,CHIP;10nF,10%,50V,X7R,TP,1608		
AC139	2203-000257	C-CERAMIC,CHIP;10nF,10%,50V,X7R,TP,1608		
TC14	2203-000280	C-CERAMIC,CHIP;0.01NF,0.5PF,50V,C0G,TP,1		
TC15	2203-000280	C-CERAMIC,CHIP;0.01NF,0.5PF,50V,C0G,TP,1		
TC16	2203-000280	C-CERAMIC,CHIP;0.01NF,0.5PF,50V,C0G,TP,1		
VC3	2203-000280	C-CERAMIC,CHIP;0.01NF,0.5PF,50V,C0G,TP,1		
VC5	2203-000280	C-CERAMIC,CHIP;0.01NF,0.5PF,50V,C0G,TP,1		
FC10	2203-000280	C-CERAMIC,CHIP;0.01NF,0.5PF,50V,C0G,TP,1		
FC9	2203-000280	C-CERAMIC,CHIP;0.01NF,0.5PF,50V,C0G,TP,1		
TC11	2203-000280	C-CERAMIC,CHIP;0.01NF,0.5PF,50V,C0G,TP,1		
TC12	2203-000280	C-CERAMIC,CHIP;0.01NF,0.5PF,50V,C0G,TP,1		
TC13	2203-000280	C-CERAMIC,CHIP;0.01NF,0.5PF,50V,C0G,TP,1		
UC3	2203-000384	C-CERAMIC,CHIP;0.015NF,5%,50V,C0G,TP,160		
UC2	2203-000426	C-CERAMIC,CHIP;0.018NF,5%,50V,C0G,TP,160		
UC1	2203-000440	C-CERAMIC,CHIP;1nF,10%,50V,X7R,TP,1608,-		
SC20	2203-000440	C-CERAMIC,CHIP;1nF,10%,50V,X7R,TP,1608,-		
SC19	2203-000440	C-CERAMIC,CHIP;1nF,10%,50V,X7R,TP,1608,-		
SC11	2203-000440	C-CERAMIC,CHIP;1nF,10%,50V,X7R,TP,1608,-		
RC26	2203-000440	C-CERAMIC,CHIP;1nF,10%,50V,X7R,TP,1608,-		
RC22	2203-000440	C-CERAMIC,CHIP;1nF,10%,50V,X7R,TP,1608,-		
RC10	2203-000440	C-CERAMIC,CHIP;1nF,10%,50V,X7R,TP,1608,-		
AC140	2203-000491	C-CERAMIC,CHIP;2.2nF,10%,50V,X7R,TP,1608		
AC141	2203-000626	C-CERAMIC,CHIP;0.022NF,5%,50V,C0G,TP,160		
AC142	2203-000626	C-CERAMIC,CHIP;0.022NF,5%,50V,C0G,TP,160		
AC104	2203-000783	C-CERAMIC,CHIP;0.33NF,5%,50V,C0G,TP,1608		
AC103	2203-000783	C-CERAMIC,CHIP;0.33NF,5%,50V,C0G,TP,1608		
DC10	2203-000888	C-CERAMIC,CHIP;4.7nF,10%,50V,X7R,TP,1608		
SC14	2203-000972	C-CERAMIC,CHIP;47nF,10%,16V,X7R,TP,1608		
SC1	2203-000972	C-CERAMIC,CHIP;47nF,10%,16V,X7R,TP,1608		
RC17	2203-000972	C-CERAMIC,CHIP;47nF,10%,16V,X7R,TP,1608		

Location no	Code no.	Description	Specification	Remarks
SC28	2203-000998	C-CERAMIC,CHIP;0.047NF,5%,50V,C0G,TP,160		
SC6	2203-000998	C-CERAMIC,CHIP;0.047NF,5%,50V,C0G,TP,160		
SC2	2203-001052	C-CERAMIC,CHIP;0.56nF,10%,50V,X7R,TP,160		
RC46	2203-001071	C-CERAMIC,CHIP;0.056NF,5%,50V,C0G,TP,160		
RC47	2203-001071	C-CERAMIC,CHIP;0.056NF,5%,50V,C0G,TP,160		
SC12	2203-001103	C-CERAMIC,CHIP;6.8nF,10%,50V,X7R,TP,1608		
VC4	2203-001126	C-CERAMIC,CHIP;0.68nF,10%,50V,X7R,TP,160		
RC9	2203-001126	C-CERAMIC,CHIP;0.68nF,10%,50V,X7R,TP,160		
RC19	2203-001126	C-CERAMIC,CHIP;0.68nF,10%,50V,X7R,TP,160		
RC18	2203-001126	C-CERAMIC,CHIP;0.68nF,10%,50V,X7R,TP,160		
RC15	2203-001126	C-CERAMIC,CHIP;0.68nF,10%,50V,X7R,TP,160		
RC13	2203-001126	C-CERAMIC,CHIP;0.68nF,10%,50V,X7R,TP,160		
SC35	2203-001573	C-CERAMIC,CHIP;0.012nF,5%,50V,NP0,TP,160		
SC29	2203-001573	C-CERAMIC,CHIP;0.012nF,5%,50V,NP0,TP,160		
ZC72	2203-001628	C-CERAMIC,CHIP;0.03nF,5%,50V,NP0,TP,1608		
ZC71	2203-001628	C-CERAMIC,CHIP;0.03nF,5%,50V,NP0,TP,1608		
RC39	2203-001636	C-CERAMIC,CHIP;0.033nF,5%,50V,NP0,TP,160		
RC16	2203-001636	C-CERAMIC,CHIP;0.033nF,5%,50V,NP0,TP,160		
RC14	2203-001636	C-CERAMIC,CHIP;0.033nF,5%,50V,NP0,TP,160		
RC12	2203-001636	C-CERAMIC,CHIP;0.033nF,5%,50V,NP0,TP,160		
VC6	2203-001640	C-CERAMIC,CHIP;0.39nF,10%,50V,X7R,TP,160		
VC2	2203-001640	C-CERAMIC,CHIP;0.39nF,10%,50V,X7R,TP,160		
	2203-001652	C-CERAMIC,CHIP;470nF,+80-20%,16V,Y5V,TP,		
SC16	2203-001656	C-CERAMIC,CHIP;0.47nF,5%,50V,NP0,TP,1608		
SC15	2203-001656	C-CERAMIC,CHIP;0.47nF,5%,50V,NP0,TP,1608		
SC38	2203-005005	C-CERAMIC,CHIP;100nF,10%,16V,X7R,TP,1608		
SC37	2203-005005	C-CERAMIC,CHIP;100nF,10%,16V,X7R,TP,1608		
SC34	2203-005005	C-CERAMIC,CHIP;100nF,10%,16V,X7R,TP,1608		
SC33	2203-005005	C-CERAMIC,CHIP;100nF,10%,16V,X7R,TP,1608		
SC32	2203-005005	C-CERAMIC,CHIP;100nF,10%,16V,X7R,TP,1608		
SC31	2203-005005	C-CERAMIC,CHIP;100nF,10%,16V,X7R,TP,1608		
SC39	2203-005005	C-CERAMIC,CHIP;100nF,10%,16V,X7R,TP,1608		
TC20	2203-005005	C-CERAMIC,CHIP;100nF,10%,16V,X7R,TP,1608		
SC9	2203-005005	C-CERAMIC,CHIP;100nF,10%,16V,X7R,TP,1608		
SC8	2203-005005	C-CERAMIC,CHIP;100nF,10%,16V,X7R,TP,1608		
SC5	2203-005005	C-CERAMIC,CHIP;100nF,10%,16V,X7R,TP,1608		
SC40	2203-005005	C-CERAMIC,CHIP;100nF,10%,16V,X7R,TP,1608		
SC4	2203-005005	C-CERAMIC,CHIP;100nF,10%,16V,X7R,TP,1608		
SC18	2203-005005	C-CERAMIC,CHIP;100nF,10%,16V,X7R,TP,1608		
SC17	2203-005005	C-CERAMIC,CHIP;100nF,10%,16V,X7R,TP,1608		
RC8	2203-005005	C-CERAMIC,CHIP;100nF,10%,16V,X7R,TP,1608		
RC44	2203-005005	C-CERAMIC,CHIP;100nF,10%,16V,X7R,TP,1608		
RC43	2203-005005	C-CERAMIC,CHIP;100nF,10%,16V,X7R,TP,1608		
RC41	2203-005005	C-CERAMIC,CHIP;100nF,10%,16V,X7R,TP,1608		
SC21	2203-005005	C-CERAMIC,CHIP;100nF,10%,16V,X7R,TP,1608		
SC27	2203-005005	C-CERAMIC,CHIP;100nF,10%,16V,X7R,TP,1608		
SC26	2203-005005	C-CERAMIC,CHIP;100nF,10%,16V,X7R,TP,1608		
SC25	2203-005005	C-CERAMIC,CHIP;100nF,10%,16V,X7R,TP,1608		
SC24	2203-005005	C-CERAMIC,CHIP;100nF,10%,16V,X7R,TP,1608		
SC23	2203-005005	C-CERAMIC,CHIP;100nF,10%,16V,X7R,TP,1608		
SC22	2203-005005	C-CERAMIC,CHIP;100nF,10%,16V,X7R,TP,1608		
TC21	2203-005005	C-CERAMIC,CHIP;100nF,10%,16V,X7R,TP,1608		
ZC4	2203-005005	C-CERAMIC,CHIP;100nF,10%,16V,X7R,TP,1608		
ZC10	2203-005005	C-CERAMIC,CHIP;100nF,10%,16V,X7R,TP,1608		
UC9	2203-005005	C-CERAMIC,CHIP;100nF,10%,16V,X7R,TP,1608		
UC7	2203-005005	C-CERAMIC,CHIP;100nF,10%,16V,X7R,TP,1608		
UC5	2203-005005	C-CERAMIC,CHIP;100nF,10%,16V,X7R,TP,1608		
UC4	2203-005005	C-CERAMIC,CHIP;100nF,10%,16V,X7R,TP,1608		
ZC5	2203-005005	C-CERAMIC,CHIP;100nF,10%,16V,X7R,TP,1608		
ZC8	2203-005005	C-CERAMIC,CHIP;100nF,10%,16V,X7R,TP,1608		
ZC76	2203-005005	C-CERAMIC,CHIP;100nF,10%,16V,X7R,TP,1608		
ZC75	2203-005005	C-CERAMIC,CHIP;100nF,10%,16V,X7R,TP,1608		
ZC74	2203-005005	C-CERAMIC,CHIP;100nF,10%,16V,X7R,TP,1608		
ZC73	2203-005005	C-CERAMIC,CHIP;100nF,10%,16V,X7R,TP,1608		
ZC7	2203-005005	C-CERAMIC,CHIP;100nF,10%,16V,X7R,TP,1608		
TC7	2203-005005	C-CERAMIC,CHIP;100nF,10%,16V,X7R,TP,1608		
TC6	2203-005005	C-CERAMIC,CHIP;100nF,10%,16V,X7R,TP,1608		
TC5	2203-005005	C-CERAMIC,CHIP;100nF,10%,16V,X7R,TP,1608		
TC4	2203-005005	C-CERAMIC,CHIP;100nF,10%,16V,X7R,TP,1608		
TC3	2203-005005	C-CERAMIC,CHIP;100nF,10%,16V,X7R,TP,1608		
TC22	2203-005005	C-CERAMIC,CHIP;100nF,10%,16V,X7R,TP,1608		
UC10	2203-005005	C-CERAMIC,CHIP;100nF,10%,16V,X7R,TP,1608		
UC17	2203-005005	C-CERAMIC,CHIP;100nF,10%,16V,X7R,TP,1608		
UC16	2203-005005	C-CERAMIC,CHIP;100nF,10%,16V,X7R,TP,1608		
UC15	2203-005005	C-CERAMIC,CHIP;100nF,10%,16V,X7R,TP,1608		
UC14	2203-005005	C-CERAMIC,CHIP;100nF,10%,16V,X7R,TP,1608		
UC12	2203-005005	C-CERAMIC,CHIP;100nF,10%,16V,X7R,TP,1608		
UC11	2203-005005	C-CERAMIC,CHIP;100nF,10%,16V,X7R,TP,1608		
RC40	2203-005005	C-CERAMIC,CHIP;100nF,10%,16V,X7R,TP,1608		
DC22	2203-005005	C-CERAMIC,CHIP;100nF,10%,16V,X7R,TP,1608		
DC2	2203-005005	C-CERAMIC,CHIP;100nF,10%,16V,X7R,TP,1608		
DC15	2203-005005	C-CERAMIC,CHIP;100nF,10%,16V,X7R,TP,1608		
DC14	2203-005005	C-CERAMIC,CHIP;100nF,10%,16V,X7R,TP,1608		
DC13	2203-005005	C-CERAMIC,CHIP;100nF,10%,16V,X7R,TP,1608		
DC11	2203-005005	C-CERAMIC,CHIP;100nF,10%,16V,X7R,TP,1608		
DC3	2203-005005	C-CERAMIC,CHIP;100nF,10%,16V,X7R,TP,1608		
FC18	2203-005005	C-CERAMIC,CHIP;100nF,10%,16V,X7R,TP,1608		
FC17	2203-005005	C-CERAMIC,CHIP;100nF,10%,16V,X7R,TP,1608		
FC16	2203-005005	C-CERAMIC,CHIP;100nF,10%,16V,X7R,TP,1608		
FC15	2203-005005	C-CERAMIC,CHIP;100nF,10%,16V,X7R,TP,1608		
FC14	2203-005005	C-CERAMIC,CHIP;100nF,10%,16V,X7R,TP,1608		
DC8	2203-005005	C-CERAMIC,CHIP;100nF,10%,16V,X7R,TP,1608		
AC136	2203-005005	C-CERAMIC,CHIP;100nF,10%,16V,X7R,TP,1608		

Location no	Code no.	Description	Specification	Remarks
AC134	2203-005005	C-CERAMIC,CHIP;100nF,10%,16V,X7R,TP,1608		
AC133	2203-005005	C-CERAMIC,CHIP;100nF,10%,16V,X7R,TP,1608		
AC132	2203-005005	C-CERAMIC,CHIP;100nF,10%,16V,X7R,TP,1608		
AC118	2203-005005	C-CERAMIC,CHIP;100nF,10%,16V,X7R,TP,1608		
AC117	2203-005005	C-CERAMIC,CHIP;100nF,10%,16V,X7R,TP,1608		
AC137	2203-005005	C-CERAMIC,CHIP;100nF,10%,16V,X7R,TP,1608		
DC1	2203-005005	C-CERAMIC,CHIP;100nF,10%,16V,X7R,TP,1608		
AC92	2203-005005	C-CERAMIC,CHIP;100nF,10%,16V,X7R,TP,1608		
AC91	2203-005005	C-CERAMIC,CHIP;100nF,10%,16V,X7R,TP,1608		
AC24	2203-005005	C-CERAMIC,CHIP;100nF,10%,16V,X7R,TP,1608		
AC18	2203-005005	C-CERAMIC,CHIP;100nF,10%,16V,X7R,TP,1608		
AC138	2203-005005	C-CERAMIC,CHIP;100nF,10%,16V,X7R,TP,1608		
FC19	2203-005005	C-CERAMIC,CHIP;100nF,10%,16V,X7R,TP,1608		
RC28	2203-005005	C-CERAMIC,CHIP;100nF,10%,16V,X7R,TP,1608		
RC23	2203-005005	C-CERAMIC,CHIP;100nF,10%,16V,X7R,TP,1608		
RC2	2203-005005	C-CERAMIC,CHIP;100nF,10%,16V,X7R,TP,1608		
RC11	2203-005005	C-CERAMIC,CHIP;100nF,10%,16V,X7R,TP,1608		
RC1	2203-005005	C-CERAMIC,CHIP;100nF,10%,16V,X7R,TP,1608		
PC9	2203-005005	C-CERAMIC,CHIP;100nF,10%,16V,X7R,TP,1608		
RC29	2203-005005	C-CERAMIC,CHIP;100nF,10%,16V,X7R,TP,1608		
RC4	2203-005005	C-CERAMIC,CHIP;100nF,10%,16V,X7R,TP,1608		
RC36	2203-005005	C-CERAMIC,CHIP;100nF,10%,16V,X7R,TP,1608		
RC35	2203-005005	C-CERAMIC,CHIP;100nF,10%,16V,X7R,TP,1608		
RC31	2203-005005	C-CERAMIC,CHIP;100nF,10%,16V,X7R,TP,1608		
RC30	2203-005005	C-CERAMIC,CHIP;100nF,10%,16V,X7R,TP,1608		
RC3	2203-005005	C-CERAMIC,CHIP;100nF,10%,16V,X7R,TP,1608		
LC2	2203-005005	C-CERAMIC,CHIP;100nF,10%,16V,X7R,TP,1608		
LC1	2203-005005	C-CERAMIC,CHIP;100nF,10%,16V,X7R,TP,1608		
FC8	2203-005005	C-CERAMIC,CHIP;100nF,10%,16V,X7R,TP,1608		
FC6	2203-005005	C-CERAMIC,CHIP;100nF,10%,16V,X7R,TP,1608		
FC5	2203-005005	C-CERAMIC,CHIP;100nF,10%,16V,X7R,TP,1608		
FC22	2203-005005	C-CERAMIC,CHIP;100nF,10%,16V,X7R,TP,1608		
LC3	2203-005005	C-CERAMIC,CHIP;100nF,10%,16V,X7R,TP,1608		
PC8	2203-005005	C-CERAMIC,CHIP;100nF,10%,16V,X7R,TP,1608		
PC14	2203-005005	C-CERAMIC,CHIP;100nF,10%,16V,X7R,TP,1608		
MC56	2203-005005	C-CERAMIC,CHIP;100nF,10%,16V,X7R,TP,1608		
MC55	2203-005005	C-CERAMIC,CHIP;100nF,10%,16V,X7R,TP,1608		
MC3	2203-005005	C-CERAMIC,CHIP;100nF,10%,16V,X7R,TP,1608		
MC2	2203-005005	C-CERAMIC,CHIP;100nF,10%,16V,X7R,TP,1608		
MC1	2203-005065	C-CERAMIC,CHIP;1000nF,+80-20%,10V,Y5V,TP		
RC7	2401-000240	C-AL;100uF,20%,10V,GP,TP,5x11,5		
RC20	2401-000240	C-AL;100uF,20%,10V,GP,TP,5x11,5		
PC13	2401-000240	C-AL;100uF,20%,10V,GP,TP,5x11,5		
PC10	2401-000240	C-AL;100uF,20%,10V,GP,TP,5x11,5		
AC116	2401-000438	C-AL;10UF,20%,25V,GP,-,5X11,5		
AC115	2401-000438	C-AL;10UF,20%,25V,GP,-,5X11,5		
AC102	2401-000438	C-AL;10UF,20%,25V,GP,-,5X11,5		
AC101	2401-000438	C-AL;10UF,20%,25V,GP,-,5X11,5		
ZC9	2401-000778	C-AL;220uF,20%,10V,GP,6.3x11,5MM,TP		
SC3	2401-000778	C-AL;220uF,20%,10V,GP,6.3x11,5MM,TP		
AC17	2401-000830	C-AL;220uF,20%,25V,GP,TP,8x11.5,5		
VC1	2401-001355	C-AL;470uF,20%,10V,GP,TP,8x11.5mm,5		
UC6	2401-001355	C-AL;470uF,20%,10V,GP,TP,8x11.5mm,5		
PC11	2401-001364	C-AL;470uF,20%,16V,GP,TP,10x12.5,5		
TC8	2401-001893	C-AL;100uF,20%,16V,GP,6*7,5MM,TP		
TC2	2401-001893	C-AL;100uF,20%,16V,GP,6*7,5MM,TP		
JC13	2401-001893	C-AL;100uF,20%,16V,GP,6*7,5MM,TP		
FC7	2401-001893	C-AL;100uF,20%,16V,GP,6*7,5MM,TP		
FC21	2401-001893	C-AL;100uF,20%,16V,GP,6*7,5MM,TP		
UC8	2401-001893	C-AL;100uF,20%,16V,GP,6*7,5MM,TP		
ZC6	2401-001893	C-AL;100uF,20%,16V,GP,6*7,5MM,TP		
ZC3	2401-001893	C-AL;100uF,20%,16V,GP,6*7,5MM,TP		
ZC2	2401-001893	C-AL;100uF,20%,16V,GP,6*7,5MM,TP		
ZC14	2401-001893	C-AL;100uF,20%,16V,GP,6*7,5MM,TP		
ZC1	2401-001893	C-AL;100uF,20%,16V,GP,6*7,5MM,TP		
FC20	2401-001893	C-AL;100uF,20%,16V,GP,6*7,5MM,TP		
AC94	2401-001893	C-AL;100uF,20%,16V,GP,6*7,5MM,TP		
AC93	2401-001893	C-AL;100uF,20%,16V,GP,6*7,5MM,TP		
AC135	2401-001893	C-AL;100uF,20%,16V,GP,6*7,5MM,TP		
AC131	2401-001893	C-AL;100uF,20%,16V,GP,6*7,5MM,TP		
AC110	2401-001893	C-AL;100uF,20%,16V,GP,6*7,5MM,TP		
DC12	2401-001893	C-AL;100uF,20%,16V,GP,6*7,5MM,TP		
FC13	2401-001893	C-AL;100uF,20%,16V,GP,6*7,5MM,TP		
FC12	2401-001893	C-AL;100uF,20%,16V,GP,6*7,5MM,TP		
FC11	2401-001893	C-AL;100uF,20%,16V,GP,6*7,5MM,TP		
DC4	2401-001893	C-AL;100uF,20%,16V,GP,6*7,5MM,TP		
DC21	2401-001893	C-AL;100uF,20%,16V,GP,6*7,5MM,TP		
RC37	2401-001975	C-AL;47uF,20%,16V,GP,TP,5x11mm,5mm		
RC45	2401-001975	C-AL;47uF,20%,16V,GP,TP,5x11mm,5mm		
UC13	2401-001975	C-AL;47uF,20%,16V,GP,TP,5x11mm,5mm		
RC34	2401-001975	C-AL;47uF,20%,16V,GP,TP,5x11mm,5mm		
AC23	2401-001975	C-AL;47uF,20%,16V,GP,TP,5x11mm,5mm		
AC112	2401-001975	C-AL;47uF,20%,16V,GP,TP,5x11mm,5mm		
AC111	2401-001975	C-AL;47uF,20%,16V,GP,TP,5x11mm,5mm		
VL2	2703-000274	INDUCTOR-SMD;2.2uH,10%,1.25x2x0.85mm		
VL1	2703-000274	INDUCTOR-SMD;2.2uH,10%,1.25x2x0.85mm		
UL1	2703-001254	INDUCTOR-SMD;1.8uH,10%,2x1.25x0.85mm		
RL2	3301-001069	BEAD-SMD;AB,1.6x0.8x0.8mm,-,-		
RL1	3301-001069	BEAD-SMD;AB,1.6x0.8x0.8mm,-,-		
AL21	3301-001069	BEAD-SMD;AB,1.6x0.8x0.8mm,-,-		
PL3	3301-001495	BEAD-SMD;AB,120OHM,2.0X1.2X0.9MM,2500MA		
PL7	3301-001495	BEAD-SMD;AB,120OHM,2.0X1.2X0.9MM,2500MA		
PL9	3301-001495	BEAD-SMD;AB,120OHM,2.0X1.2X0.9MM,2500MA		

Location no	Code no.	Description Specification	Remarks
ZL1	3301-001495	BEAD-SMD;AB,120OHM,2.0X1.2X0.9MM,2500MA	
ZL71	3301-001495	BEAD-SMD;AB,120OHM,2.0X1.2X0.9MM,2500MA	
ZL72	3301-001495	BEAD-SMD;AB,120OHM,2.0X1.2X0.9MM,2500MA	
ZL73	3301-001495	BEAD-SMD;AB,120OHM,2.0X1.2X0.9MM,2500MA	
AL1	3301-001495	BEAD-SMD;AB,120OHM,2.0X1.2X0.9MM,2500MA	
AL2	3301-001495	BEAD-SMD;AB,120OHM,2.0X1.2X0.9MM,2500MA	
DL1	3301-001495	BEAD-SMD;AB,120OHM,2.0X1.2X0.9MM,2500MA	
DL2	3301-001495	BEAD-SMD;AB,120OHM,2.0X1.2X0.9MM,2500MA	
DL5	3301-001495	BEAD-SMD;AB,120OHM,2.0X1.2X0.9MM,2500MA	
DL6	3301-001495	BEAD-SMD;AB,120OHM,2.0X1.2X0.9MM,2500MA	
PL10	3301-001495	BEAD-SMD;AB,120OHM,2.0X1.2X0.9MM,2500MA	
FIC4	AH09-00093A	IC MICOM;ATF1500A,PLCC,-,17.7*	OLD PART
FIC4	1301-001661	IC MICOM;ATF1502AS,PLCC	NEW PART(MP3)
FIC2	AH11-00099A	MASK ROM;MX23C3210,MAX-KD100,32M,-,SOP,	
ZIC1	AH14-10004R	IC;M74HCU04,SOP,TAPE 14P	
	AH97-00840A	**ASSY DVD DECK;-,CMS-D300,MX-DVA5**	
	3710-000544	CONNECTOR-SOCKET;3P,1R,2.5MM,STRAIGHT,SN	
	3711-003379	CONNECTOR-HEADER;NOWALL,3P,1R,2.5mm,STRA	
	3809-001299	CABLE-FLAT;30V,80C,190MM,24P,1MM,UL20696	
	3809-001300	CABLE-FLAT;30V,80C,180MM,7P,1.25MM,UL289	
	AH97-00900B	**ASSY-DECK CDP;-,MXDVA5,ASSY DECK CDP**	
	3405-000101	SWITCH-MICRO;1.6V,1A,70gf,SPST	
	3711-000826	CONNECTOR-HEADER;BOX,2P,1R,2mm,ANGLE,SN	
	AH92-00995B	**ASSY PCB;MAX-ZL45,TAPE,DECK**	
	6002-000396	SCREW-TAPPING;BH,+,2,M2,L5,ZPC(WHT),SWCH	
	AH39-00021A	LEAD CONNECTOR ASSY;UL1533#28,300MM,-,-,	
	AH39-20002D	LEAD CONNECTOR ASSY;5264,-,3P,300MM,2970	
	AH59-01142A	DECK-CASSETTE;ADR266AMW,MAXB450,-,-,DC12	
	AH81-00101A	A/S-BELT SUB;ADR2400S,34.7,6602-001055,-	
	AH81-00102A	A/S-SOLENOID;ADR2400-1,MT75-00049A,-,-,-	
	AH81-00141A	A/S-HEAD PB;TC881CB,MT59-00044A,-,-,-,-,	
	AH81-00363A	A/S-ASSY MOTOR;ADR246DSW,MT91-15012J,-,-	
	AH81-00364A	A/S-BELT MAIN1;ADR246DSW,6602-001056,-,-	
	AH81-00365A	A/S-BELT MAIN2;ADR246DSW,6602-001057,-,-	
	AH81-01029A	A/S PART-R/P HEAD ASSY;MAXB450,MT91-1101	
	AH61-00413B	BRACKET-DECK;MAX-B550,SPTE 0.3T,0.3T,-,-	
	AH92-01811A	**ASSY PCB-FRONT;MAX-KD100,FRONT**	
	0601-001490	LED;INVERTER,BLUE,3MM,465-477NM	
UIC4	0904-001621	IC-I/O CONTROLLER;PT8300,16BIT,SOP,28P,3	
UIC3	0904-001621	IC-I/O CONTROLLER;PT8300,16BIT,SOP,28P,3	
UIC2	0904-001621	IC-I/O CONTROLLER;PT8300,16BIT,SOP,28P,3	
MIC1	1201-001572	IC-PREAMP;2011,SIP,7P,17MIL,SINGLE,47,PL	
UIC5	1204-002110	IC-SOUND PROCESSOR;NJM2072D,DIP,8P,-,PLA	
UR106	2003-000690	R-METAL OXIDE(S);4.7ohm,5%,2W,AA,TP,4x12	
MVR1	2101-001052	VR-ROTARY;10KOHM,10%,0.05W,TOP	
UX2	2801-001394	CRYSTAL-UNIT;32.768KHz,20ppm,28-AAY,12.5	
UX1	2802-001174	RESONATOR-CERAMIC;10MHZ,0.5%,BK,8X3.5X3M	
UVR1	3406-001047	SWITCH-ROTARY;5V DC,0.5mA,-,12mm	
UVR2	3406-001050	SWITCH-ROTARY;5V DC,0.5mA,click,12mm	
UVR3	3406-001050	SWITCH-ROTARY;5V DC,0.5mA,click,12mm	
UCW5	3708-000451	CONNECTOR-FPC/FFC/PIC;16P,1.25mm,STRAIGH	
UCW2	3708-000451	CONNECTOR-FPC/FFC/PIC;16P,1.25mm,STRAIGH	
UCW1	3708-000451	CONNECTOR-FPC/FFC/PIC;16P,1.25mm,STRAIGH	
UCW4	3708-000452	CONNECTOR-FPC/FFC/PIC;19P,1.25mm,STRAIGH	
UCW6	3708-001212	CONNECTOR-FPC/FFC/PIC;27P,1.25mm,STRAIGH	
UCW8	3708-001845	CONNECTOR-FPC/FFC/PIC;23P,1.25MM,STRAIGH	
UCW3	3708-001845	CONNECTOR-FPC/FFC/PIC;23P,1.25MM,STRAIGH	
UCH1	3711-000907	CONNECTOR-HEADER;BOX,3P,1R,2mm,STRAIGHT,	
UCH2	3711-001018	CONNECTOR-HEADER;BOX,5P,1R,2mm,STRAIGHT,	
HJACK1	3722-000351	JACK-PHONE;11P,3.5PI,AG,BLK,-	
MJACK1	3722-001190	JACK-PHONE;9P/2C,6.43PI,AU,BLK,RC6701(EI	
MJACK2	3722-001190	JACK-PHONE;9P/2C,6.43PI,AU,BLK,RC6701(EI	
RE-EYE	AC59-60060A	MODULE REMOCON;GP1U281R,SHARP,38KHZ,-,-,	
UVFD1	AH07-00066A	VF DISPLAY;HNA-16LM24T,MAX-B550/570/VB55	
UIC1	AH11-00094A	MASK ROM;LC876748C-52B9,MAX-KD100,56K,-	
UCA2	AH39-00101A	LEAD CONNECTOR ASSY;-,5295,51004,5P,150M	
	AH39-00264A	WIRE HARNESS;W2000,#1007,-,02P,-,-,-,529	
UCA1	AH39-00477A	LEAD CONNECTOR-ASSY;HT-DB300,-,-,3P,-,-,	
	AH39-50001N	WIRE HARNESS;RING,1007#24,250MM,BLK	
	AH61-00521A	HOLDER-VFD;MAXL65,ABS,-,-,-,BLK,-	
UD41	0401-000101	DIODE-SWITCHING;1N4148,100V,200mA,DO-35,	
UD3	0401-000101	DIODE-SWITCHING;1N4148,100V,200mA,DO-35,	
UD22	0401-000101	DIODE-SWITCHING;1N4148,100V,200mA,DO-35,	
UD42	0401-000101	DIODE-SWITCHING;1N4148,100V,200mA,DO-35,	
UD7	0401-000101	DIODE-SWITCHING;1N4148,100V,200mA,DO-35,	
UD9	0401-000101	DIODE-SWITCHING;1N4148,100V,200mA,DO-35,	
HD1	0401-000101	DIODE-SWITCHING;1N4148,100V,200mA,DO-35,	
MD1	0401-000101	DIODE-SWITCHING;1N4148,100V,200mA,DO-35,	
UD11	0401-000101	DIODE-SWITCHING;1N4148,100V,200mA,DO-35,	
UD2	0401-000101	DIODE-SWITCHING;1N4148,100V,200mA,DO-35,	
UD18	0401-000101	DIODE-SWITCHING;1N4148,100V,200mA,DO-35,	
UD17	0401-000101	DIODE-SWITCHING;1N4148,100V,200mA,DO-35,	
UD21	0402-000127	DIODE-RECTIFIER;1N4002,100V,1A,DO-41,TP	
UD27	0402-000127	DIODE-RECTIFIER;1N4002,100V,1A,DO-41,TP	
UD30	0402-000127	DIODE-RECTIFIER;1N4002,100V,1A,DO-41,TP	
UD31	0402-000127	DIODE-RECTIFIER;1N4002,100V,1A,DO-41,TP	
UD15	0402-000127	DIODE-RECTIFIER;1N4002,100V,1A,DO-41,TP	
UD16	0402-000127	DIODE-RECTIFIER;1N4002,100V,1A,DO-41,TP	
UD19	0402-000127	DIODE-RECTIFIER;1N4002,100V,1A,DO-41,TP	
UD20	0402-000127	DIODE-RECTIFIER;1N4002,100V,1A,DO-41,TP	
UZD1	0403-000392	DIODE-ZENER;UZP4.7B,4.7V,4.4-5.0V,1W,DO-	

Location no	Code no.	Description Specification	Remarks
UQ3	0501-000398	TR-SMALL SIGNAL;KSC945,NPN,250mW,TO-92,T	
UQ2	0501-000398	TR-SMALL SIGNAL;KSC945,NPN,250mW,TO-92,T	
UQ1	0501-000398	TR-SMALL SIGNAL;KSC945,NPN,250mW,TO-92,T	
UQ6	0501-000407	TR-SMALL SIGNAL;KSD471A-Y,NPN,800mW,TO-9	
UQ5	0501-000407	TR-SMALL SIGNAL;KSD471A-Y,NPN,800mW,TO-9	
UQ4	0501-000407	TR-SMALL SIGNAL;KSD471A-Y,NPN,800mW,TO-9	
UQ3	0501-000407	TR-SMALL SIGNAL;KSD471A-Y,NPN,800mW,TO-9	
UQ9	0501-000610	TR-SMALL SIGNAL;KSA928A-Y,PNP,1W,TO-92L,	
UQ8	0501-000610	TR-SMALL SIGNAL;KSA928A-Y,PNP,1W,TO-92L,	
UQ7	0501-000610	TR-SMALL SIGNAL;KSA928A-Y,PNP,1W,TO-92L,	
UQ12	0504-000118	TR-DIGITAL;KSR1003,NPN,300MW,22K/22K,TO-	
UQ11	0504-000118	TR-DIGITAL;KSR1003,NPN,300MW,22K/22K,TO-	
ULD4	0601-001074	LED;ROUND,GRN,3mm,569nm	
ULD3	0601-001074	LED;ROUND,GRN,3mm,569nm	
ULD2	0601-001074	LED;ROUND,GRN,3mm,569nm	
ULD1	0601-001074	LED;ROUND,GRN,3mm,569nm	
ULD5	0601-001238	LED;ROUND,RED,3.1mm,697nm	
UR69	2001-000008	R-CARBON;15Kohm,5%,1/8W,AA,TP,1.8x3.2mm	
UR62	2001-000008	R-CARBON;15Kohm,5%,1/8W,AA,TP,1.8x3.2mm	
UR174	2001-000008	R-CARBON;15Kohm,5%,1/8W,AA,TP,1.8x3.2mm	
UR173	2001-000008	R-CARBON;15Kohm,5%,1/8W,AA,TP,1.8x3.2mm	
UR150	2001-000027	R-CARBON;100ohm,5%,1/4W,AA,TP,2.4x6.4mm	
UR63	2001-000036	R-CARBON;330ohm,5%,1/4W,AA,TP,2.4x6.4mm	
UR107	2001-000037	R-CARBON(S);330OHM,5%,1/2W,AA,TP,2.4X6.4	
UR129	2001-000221	R-CARBON;1.2Kohm,5%,1/8W,AA,TP,1.8x3.2m	
UR90	2001-000221	R-CARBON;1.2Kohm,5%,1/8W,AA,TP,1.8x3.2m	
UR91	2001-000241	R-CARBON;1.5Kohm,5%,1/8W,AA,TP,1.8x3.2m	
UR130	2001-000241	R-CARBON;1.5Kohm,5%,1/8W,AA,TP,1.8x3.2m	
UR112	2001-000258	R-CARBON;1.8Kohm,5%,1/8W,AA,TP,1.8x3.2m	
UR104	2001-000273	R-CARBON;100Kohm,5%,1/8W,AA,TP,1.8x3.2m	
UR104	2001-000273	R-CARBON;100Kohm,5%,1/8W,AA,TP,1.8x3.2m	
MR40	2001-000273	R-CARBON;100Kohm,5%,1/8W,AA,TP,1.8x3.2m	
UR75	2001-000281	R-CARBON;100ohm,5%,1/8W,AA,TP,1.8x3.2mm	
UR76	2001-000281	R-CARBON;100ohm,5%,1/8W,AA,TP,1.8x3.2mm	
UR77	2001-000281	R-CARBON;100ohm,5%,1/8W,AA,TP,1.8x3.2mm	
UR78	2001-000281	R-CARBON;100ohm,5%,1/8W,AA,TP,1.8x3.2mm	
MR3	2001-000281	R-CARBON;100ohm,5%,1/8W,AA,TP,1.8x3.2mm	
UR170	2001-000281	R-CARBON;100ohm,5%,1/8W,AA,TP,1.8x3.2mm	
UR171	2001-000281	R-CARBON;100ohm,5%,1/8W,AA,TP,1.8x3.2mm	
UR74	2001-000281	R-CARBON;100ohm,5%,1/8W,AA,TP,1.8x3.2mm	
UR6	2001-000290	R-CARBON;10Kohm,5%,1/8W,AA,TP,1.8x3.2mm	
UR54	2001-000290	R-CARBON;10Kohm,5%,1/8W,AA,TP,1.8x3.2mm	
UR5	2001-000290	R-CARBON;10Kohm,5%,1/8W,AA,TP,1.8x3.2mm	
UR64	2001-000290	R-CARBON;10Kohm,5%,1/8W,AA,TP,1.8x3.2mm	
UR7	2001-000290	R-CARBON;10Kohm,5%,1/8W,AA,TP,1.8x3.2mm	
UR70	2001-000290	R-CARBON;10Kohm,5%,1/8W,AA,TP,1.8x3.2mm	
UR71	2001-000290	R-CARBON;10Kohm,5%,1/8W,AA,TP,1.8x3.2mm	
UR39	2001-000290	R-CARBON;10Kohm,5%,1/8W,AA,TP,1.8x3.2mm	
UR4	2001-000290	R-CARBON;10Kohm,5%,1/8W,AA,TP,1.8x3.2mm	
UR40	2001-000290	R-CARBON;10Kohm,5%,1/8W,AA,TP,1.8x3.2mm	
UR41	2001-000290	R-CARBON;10Kohm,5%,1/8W,AA,TP,1.8x3.2mm	
UR42	2001-000290	R-CARBON;10Kohm,5%,1/8W,AA,TP,1.8x3.2mm	
UR43	2001-000290	R-CARBON;10Kohm,5%,1/8W,AA,TP,1.8x3.2mm	
UR47	2001-000290	R-CARBON;10Kohm,5%,1/8W,AA,TP,1.8x3.2mm	
UR72	2001-000290	R-CARBON;10Kohm,5%,1/8W,AA,TP,1.8x3.2mm	
UR86	2001-000290	R-CARBON;10Kohm,5%,1/8W,AA,TP,1.8x3.2mm	
UR87	2001-000290	R-CARBON;10Kohm,5%,1/8W,AA,TP,1.8x3.2mm	
UR9	2001-000290	R-CARBON;10Kohm,5%,1/8W,AA,TP,1.8x3.2mm	
UR92	2001-000290	R-CARBON;10Kohm,5%,1/8W,AA,TP,1.8x3.2mm	
UR93	2001-000290	R-CARBON;10Kohm,5%,1/8W,AA,TP,1.8x3.2mm	
UR94	2001-000290	R-CARBON;10Kohm,5%,1/8W,AA,TP,1.8x3.2mm	
UR95	2001-000290	R-CARBON;10Kohm,5%,1/8W,AA,TP,1.8x3.2mm	
UR73	2001-000290	R-CARBON;10Kohm,5%,1/8W,AA,TP,1.8x3.2mm	
UR8	2001-000290	R-CARBON;10Kohm,5%,1/8W,AA,TP,1.8x3.2mm	
UR80	2001-000290	R-CARBON;10Kohm,5%,1/8W,AA,TP,1.8x3.2mm	
UR81	2001-000290	R-CARBON;10Kohm,5%,1/8W,AA,TP,1.8x3.2mm	
UR82	2001-000290	R-CARBON;10Kohm,5%,1/8W,AA,TP,1.8x3.2mm	
UR84	2001-000290	R-CARBON;10Kohm,5%,1/8W,AA,TP,1.8x3.2mm	
UR85	2001-000290	R-CARBON;10Kohm,5%,1/8W,AA,TP,1.8x3.2mm	
UR121	2001-000290	R-CARBON;10Kohm,5%,1/8W,AA,TP,1.8x3.2mm	
UR122	2001-000290	R-CARBON;10Kohm,5%,1/8W,AA,TP,1.8x3.2mm	
UR13	2001-000290	R-CARBON;10Kohm,5%,1/8W,AA,TP,1.8x3.2mm	
UR135	2001-000290	R-CARBON;10Kohm,5%,1/8W,AA,TP,1.8x3.2mm	
UR136	2001-000290	R-CARBON;10Kohm,5%,1/8W,AA,TP,1.8x3.2mm	
UR137	2001-000290	R-CARBON;10Kohm,5%,1/8W,AA,TP,1.8x3.2mm	
UR138	2001-000290	R-CARBON;10Kohm,5%,1/8W,AA,TP,1.8x3.2mm	
UR1	2001-000290	R-CARBON;10Kohm,5%,1/8W,AA,TP,1.8x3.2mm	
UR10	2001-000290	R-CARBON;10Kohm,5%,1/8W,AA,TP,1.8x3.2mm	
UR100	2001-000290	R-CARBON;10Kohm,5%,1/8W,AA,TP,1.8x3.2mm	
UR101	2001-000290	R-CARBON;10Kohm,5%,1/8W,AA,TP,1.8x3.2mm	
UR11	2001-000290	R-CARBON;10Kohm,5%,1/8W,AA,TP,1.8x3.2mm	
UR12	2001-000290	R-CARBON;10Kohm,5%,1/8W,AA,TP,1.8x3.2mm	
UR120	2001-000290	R-CARBON;10Kohm,5%,1/8W,AA,TP,1.8x3.2mm	
UR139	2001-000290	R-CARBON;10Kohm,5%,1/8W,AA,TP,1.8x3.2mm	
UR23	2001-000290	R-CARBON;10Kohm,5%,1/8W,AA,TP,1.8x3.2mm	
UR24	2001-000290	R-CARBON;10Kohm,5%,1/8W,AA,TP,1.8x3.2mm	
UR25	2001-000290	R-CARBON;10Kohm,5%,1/8W,AA,TP,1.8x3.2mm	
UR26	2001-000290	R-CARBON;10Kohm,5%,1/8W,AA,TP,1.8x3.2mm	
UR27	2001-000290	R-CARBON;10Kohm,5%,1/8W,AA,TP,1.8x3.2mm	
UR28	2001-000290	R-CARBON;10Kohm,5%,1/8W,AA,TP,1.8x3.2mm	
UR3	2001-000290	R-CARBON;10Kohm,5%,1/8W,AA,TP,1.8x3.2mm	
UR14	2001-000290	R-CARBON;10Kohm,5%,1/8W,AA,TP,1.8x3.2mm	
UR140	2001-000290	R-CARBON;10Kohm,5%,1/8W,AA,TP,1.8x3.2mm	

Location no	Code no.	Description	Specification	Remarks
UR142	2001-000290	R-CARBON;10Kohm,5%,1/8W,AA,TP,1.8x3.2mm		
UR143	2001-000290	R-CARBON;10Kohm,5%,1/8W,AA,TP,1.8x3.2mm		
UR15	2001-000290	R-CARBON;10Kohm,5%,1/8W,AA,TP,1.8x3.2mm		
UR16	2001-000290	R-CARBON;10Kohm,5%,1/8W,AA,TP,1.8x3.2mm		
UR2	2001-000290	R-CARBON;10Kohm,5%,1/8W,AA,TP,1.8x3.2mm		
UR21	2001-000295	R-CARBON;10MOHM,5%,1/8W,AA,TP,1.8X3.2MM		
UR19	2001-000362	R-CARBON;150ohm,5%,1/8W,AA,TP,1.8x3.2mm		
UR131	2001-000405	R-CARBON;180OHM,5%,1/8W,AA,TP,1.8X3.2MM		
UR111	2001-000405	R-CARBON;180OHM,5%,1/8W,AA,TP,1.8X3.2MM		
UR109	2001-000405	R-CARBON;180OHM,5%,1/8W,AA,TP,1.8X3.2MM		
UR108	2001-000405	R-CARBON;180OHM,5%,1/8W,AA,TP,1.8X3.2MM		
UR89	2001-000429	R-CARBON;1Kohm,5%,1/8W,AA,TP,1.8x3.2mm		
UR51	2001-000429	R-CARBON;1Kohm,5%,1/8W,AA,TP,1.8x3.2mm		
UR128	2001-000429	R-CARBON;1Kohm,5%,1/8W,AA,TP,1.8x3.2mm		
UR22	2001-000435	R-CARBON;1Mohm,5%,1/8W,AA,TP,1.8x3.2mm		
MR4	2001-000435	R-CARBON;1Mohm,5%,1/8W,AA,TP,1.8x3.2mm		
UR88	2001-000449	R-CARBON;2.2Kohm,5%,1/8W,AA,TP,1.8x3.2m		
UR110	2001-000449	R-CARBON;2.2Kohm,5%,1/8W,AA,TP,1.8x3.2m		
MR6	2001-000449	R-CARBON;2.2Kohm,5%,1/8W,AA,TP,1.8x3.2m		
MR2	2001-000449	R-CARBON;2.2Kohm,5%,1/8W,AA,TP,1.8x3.2m		
UR18	2001-000508	R-CARBON;220Kohm,5%,1/8W,AA,TP,1.8x3.2m		
UR44	2001-000522	R-CARBON;22Kohm,5%,1/8W,AA,TP,1.8x3.2mm		
UR172	2001-000522	R-CARBON;22Kohm,5%,1/8W,AA,TP,1.8x3.2mm		
UR124	2001-000522	R-CARBON;22Kohm,5%,1/8W,AA,TP,1.8x3.2mm		
UD23	2001-000525	R-CARBON;22ohm,5%,1/4W,AA,TP,2.4x6.4mm		
UJ1	2001-000527	R-CARBON;22ohm,5%,1/8W,AA,TP,1.8x3.2mm		
	2001-000554	R-CARBON;270ohm,5%,1/8W,AA,TP,1.8x3.2mm		
UR145	2001-000591	R-CARBON;3.3Kohm,5%,1/8W,AA,TP,1.8x3.2m		
UR52	2001-000613	R-CARBON;3.9Kohm,5%,1/8W,AA,TP,1.8x3.2m		
UR68	2001-000660	R-CARBON;33Kohm,5%,1/8W,AA,TP,1.8x3.2mm		
UR61	2001-000660	R-CARBON;33Kohm,5%,1/8W,AA,TP,1.8x3.2mm		
UR51	2001-000734	R-CARBON;4.7Kohm,5%,1/8W,AA,TP,1.8x3.2m		
UR53	2001-000734	R-CARBON;4.7Kohm,5%,1/8W,AA,TP,1.8x3.2m		
UR55	2001-000734	R-CARBON;4.7Kohm,5%,1/8W,AA,TP,1.8x3.2m		
UR56	2001-000734	R-CARBON;4.7Kohm,5%,1/8W,AA,TP,1.8x3.2m		
UR57	2001-000734	R-CARBON;4.7Kohm,5%,1/8W,AA,TP,1.8x3.2m		
UR46	2001-000734	R-CARBON;4.7Kohm,5%,1/8W,AA,TP,1.8x3.2m		
MR1	2001-000734	R-CARBON;4.7Kohm,5%,1/8W,AA,TP,1.8x3.2m		
MR7	2001-000734	R-CARBON;4.7Kohm,5%,1/8W,AA,TP,1.8x3.2m		
UR132	2001-000734	R-CARBON;4.7Kohm,5%,1/8W,AA,TP,1.8x3.2m		
UR146	2001-000734	R-CARBON;4.7Kohm,5%,1/8W,AA,TP,1.8x3.2m		
UR17	2001-000734	R-CARBON;4.7Kohm,5%,1/8W,AA,TP,1.8x3.2m		
HR2	2001-000745	R-CARBON;4.7ohm,5%,1/8W,AA,TP,1.8x3.2mm		
HR1	2001-000745	R-CARBON;4.7ohm,5%,1/8W,AA,TP,1.8x3.2mm		
UJ138	2001-000780	R-CARBON;470ohm,5%,1/8W,AA,TP,1.8x3.2mm		
UR34	2001-000786	R-CARBON;47Kohm,5%,1/8W,AA,TP,1.8x3.2mm		
UR33	2001-000786	R-CARBON;47Kohm,5%,1/8W,AA,TP,1.8x3.2mm		
UR32	2001-000786	R-CARBON;47Kohm,5%,1/8W,AA,TP,1.8x3.2mm		
UR35	2001-000786	R-CARBON;47Kohm,5%,1/8W,AA,TP,1.8x3.2mm		
UR36	2001-000786	R-CARBON;47Kohm,5%,1/8W,AA,TP,1.8x3.2mm		
UR37	2001-000786	R-CARBON;47Kohm,5%,1/8W,AA,TP,1.8x3.2mm		
UR38	2001-000786	R-CARBON;47Kohm,5%,1/8W,AA,TP,1.8x3.2mm		
MR20	2001-000786	R-CARBON;47Kohm,5%,1/8W,AA,TP,1.8x3.2mm		
MR2132	2001-000786	R-CARBON;47Kohm,5%,1/8W,AA,TP,1.8x3.2mm		
UR134	2001-000786	R-CARBON;47Kohm,5%,1/8W,AA,TP,1.8x3.2mm		
UR200	2001-000786	R-CARBON;47Kohm,5%,1/8W,AA,TP,1.8x3.2mm		
UR29	2001-000786	R-CARBON;47Kohm,5%,1/8W,AA,TP,1.8x3.2mm		
UR30	2001-000786	R-CARBON;47Kohm,5%,1/8W,AA,TP,1.8x3.2mm		
UR31	2001-000786	R-CARBON;47Kohm,5%,1/8W,AA,TP,1.8x3.2mm		
UR20	2001-000850	R-CARBON;560Kohm,5%,1/8W,AA,TP,1.8x3.2m		
UR119	2001-000890	R-CARBON;6.8Kohm,5%,1/8W,AA,TP,1.8x3.2m		
UR113	2001-000995	R-CARBON;820ohm,5%,1/8W,AA,TP,1.8x3.2mm		
UR127	2001-000995	R-CARBON;820ohm,5%,1/8W,AA,TP,1.8x3.2mm		
UR60	2001-001192	R-CARBON(S);820ohm,5%,1/2W,AA,TP,2.4x6.4		
UR59	2001-001192	R-CARBON(S);820ohm,5%,1/2W,AA,TP,2.4x6.4		
UR58	2001-001192	R-CARBON(S);820ohm,5%,1/2W,AA,TP,2.4x6.4		
URV1	2103-000341	VR-SEMI;2Kohm,30%,1/10W,TOP		
	2201-000146	C-CERAMIC,DISC;0.1NF,5%,50V,SL,TP,5X3.5M		
UC11	2201-000300	C-CERAMIC,DISC;1NF,20%,50V,Y5T,TP,5X3MM,		
HC2	2201-000300	C-CERAMIC,DISC;1NF,20%,50V,Y5T,TP,5X3MM,		
HC1	2201-000300	C-CERAMIC,DISC;1NF,20%,50V,Y5T,TP,5X3MM,		
UC8	2201-000389	C-CERAMIC,DISC;0.022NF,5%,50V,C0G,TP,5X3		
UC7	2201-000389	C-CERAMIC,DISC;0.022NF,5%,50V,C0G,TP,5X3		
UC35	2201-000565	C-CERAMIC,DISC;47nF,+80-20%,-,,-,-,12.5x4m		
ZC1	2201-000565	C-CERAMIC,DISC;47nF,+80-20%,-,,-,-,12.5x4m		
ZC2	2201-000565	C-CERAMIC,DISC;47nF,+80-20%,-,,-,-,12.5x4m		
ZC4	2201-000565	C-CERAMIC,DISC;47nF,+80-20%,-,,-,-,12.5x4m		
UC1	2201-000565	C-CERAMIC,DISC;47nF,+80-20%,-,,-,-,12.5x4m		
UC10	2201-000565	C-CERAMIC,DISC;47nF,+80-20%,-,,-,-,12.5x4m		
UC15	2201-000565	C-CERAMIC,DISC;47nF,+80-20%,-,,-,-,12.5x4m		
UC3	2201-000565	C-CERAMIC,DISC;47nF,+80-20%,-,,-,-,12.5x4m		
UC17	2201-000783	C-CERAMIC,DISC;100NF,+80-20%,50V,Y5V,TP,		
UC001	2202-000780	C-CERAMIC,MLC-AXIAL;100nF,+80-20%,50V,Y5		
UC60	2202-000780	C-CERAMIC,MLC-AXIAL;100nF,+80-20%,50V,Y5		
	2202-000781	C-CERAMIC,MLC-AXIAL;100pF,10%,50V,Y5P,TP		
UC901	2202-000796	C-CERAMIC,MLC-AXIAL;1NF,10%,50V,Y5P,TP,3		
UC39	2202-000796	C-CERAMIC,MLC-AXIAL;1NF,10%,50V,Y5P,TP,3		
UC25	2202-000796	C-CERAMIC,MLC-AXIAL;1NF,10%,50V,Y5P,TP,3		
UC24	2202-000796	C-CERAMIC,MLC-AXIAL;1NF,10%,50V,Y5P,TP,3		
UC21	2202-000796	C-CERAMIC,MLC-AXIAL;1NF,10%,50V,Y5P,TP,3		
UC20	2202-000796	C-CERAMIC,MLC-AXIAL;1NF,10%,50V,Y5P,TP,3		
UC19	2202-000796	C-CERAMIC,MLC-AXIAL;1NF,10%,50V,Y5P,TP,3		
UC18	2202-000796	C-CERAMIC,MLC-AXIAL;1NF,10%,50V,Y5P,TP,3		

Location no	Code no.	Description	Specification	Remarks
UC28	2202-000797	C-CERAMIC,MLC-AXIAL;10NF,30%,16V,Y5S,TP,		
UC40	2301-000419	C-FILM,PEF;27nF,10%,50V,TP,7.5x10.5x4mm,		
	2401-000240	C-AL;100uF,20%,10V,GP,TP,5x11,5		
UC37	2401-000438	C-AL;10UF,20%,25V,GP,-,5X11,5		
UC9	2401-000475	C-AL;10uF,20%,50V,GP,TP,5x11mm,5mm		
UC2	2401-000475	C-AL;10uF,20%,50V,GP,TP,5x11mm,5mm		
MC4	2401-000475	C-AL;10uF,20%,50V,GP,TP,5x11mm,5mm		
	2401-000759	C-AL;220nF,20%,50V,GP,TP,5x11mm,5mm		
MC5	2401-001022	C-AL;3.3UF,20%,50V,GP,TP,5X11,5		
UC5	2401-001893	C-AL;100uF,20%,16V,GP,6*7,5MM,TP		
UC4	2401-001893	C-AL;100uF,20%,16V,GP,6*7,5MM,TP		
UC16	2401-001893	C-AL;100uF,20%,16V,GP,6*7,5MM,TP		
MC1	2401-001893	C-AL;100uF,20%,16V,GP,6*7,5MM,TP		
MC10	2401-001893	C-AL;100uF,20%,16V,GP,6*7,5MM,TP		
UC14	2401-001893	C-AL;100uF,20%,16V,GP,6*7,5MM,TP		
MC3	2401-001912	C-AL;1uF,20%,50V,GP,5*11,5mm,TP		
MC6	2401-001912	C-AL;1uF,20%,50V,GP,5*11,5mm,TP		
UC38	2401-001975	C-AL;47uF,20%,16V,GP,TP,5x11mm,5mm		
MC2	2401-001975	C-AL;47uF,20%,16V,GP,TP,5x11mm,5mm		
MC30	2401-002180	C-AL;2.2uF,20%,50V,GP,TP,5x11mm,5mm		
UC13	2409-000123	C-EDL;47000uF,4uA,5.5V,-,BK,-,5mm		
UL4	2701-000114	INDUCTOR-AXIAL;10uH,10%,2.5x3.4mm		
UL3	2701-000114	INDUCTOR-AXIAL;10uH,10%,2.5x3.4mm		
UL2	2701-000114	INDUCTOR-AXIAL;10uH,10%,2.5x3.4mm		
UL19	2701-000114	INDUCTOR-AXIAL;10uH,10%,2.5x3.4mm		
UL18	2701-000114	INDUCTOR-AXIAL;10uH,10%,2.5x3.4mm		
UL9	2701-000114	INDUCTOR-AXIAL;10uH,10%,2.5x3.4mm		
UL8	2701-000114	INDUCTOR-AXIAL;10uH,10%,2.5x3.4mm		
UL7	2701-000114	INDUCTOR-AXIAL;10uH,10%,2.5x3.4mm		
UL6	2701-000114	INDUCTOR-AXIAL;10uH,10%,2.5x3.4mm		
UL5	2701-000114	INDUCTOR-AXIAL;10uH,10%,2.5x3.4mm		
UL12	2701-000114	INDUCTOR-AXIAL;10uH,10%,2.5x3.4mm		
UL11	2701-000114	INDUCTOR-AXIAL;10uH,10%,2.5x3.4mm		
UL10	2701-000114	INDUCTOR-AXIAL;10uH,10%,2.5x3.4mm		
UL1	2701-000114	INDUCTOR-AXIAL;10uH,10%,2.5x3.4mm		
HL1	2701-000114	INDUCTOR-AXIAL;10uH,10%,2.5x3.4mm		
UL17	2701-000114	INDUCTOR-AXIAL;10uH,10%,2.5x3.4mm		
UL16	2701-000114	INDUCTOR-AXIAL;10uH,10%,2.5x3.4mm		
UL15	2701-000114	INDUCTOR-AXIAL;10uH,10%,2.5x3.4mm		
UL14	2701-000114	INDUCTOR-AXIAL;10uH,10%,2.5x3.4mm		
UL13	2701-000114	INDUCTOR-AXIAL;10uH,10%,2.5x3.4mm		
HL2	2701-000178	INDUCTOR-AXIAL;33uH,10%,3x7mm		
HL1	2701-000178	INDUCTOR-AXIAL;33uH,10%,3x7mm		
USW5	3404-000165	SWITCH-TACT;12V,50mA,160gf,6x6mm,SPST		
USW4	3404-000165	SWITCH-TACT;12V,50mA,160gf,6x6mm,SPST		
USW3	3404-000165	SWITCH-TACT;12V,50mA,160gf,6x6mm,SPST		
USW2	3404-000165	SWITCH-TACT;12V,50mA,160gf,6x6mm,SPST		
USW6	3404-000165	SWITCH-TACT;12V,50mA,160gf,6x6mm,SPST		
USW7	3404-000165	SWITCH-TACT;12V,50mA,160gf,6x6mm,SPST		
USW8	3404-000165	SWITCH-TACT;12V,50mA,160gf,6x6mm,SPST		
USW9	3404-000165	SWITCH-TACT;12V,50mA,160gf,6x6mm,SPST		
USW17	3404-000165	SWITCH-TACT;12V,50mA,160gf,6x6mm,SPST		
USW1	3404-000165	SWITCH-TACT;12V,50mA,160gf,6x6mm,SPST		
USW10	3404-000165	SWITCH-TACT;12V,50mA,160gf,6x6mm,SPST		
USW11	3404-000165	SWITCH-TACT;12V,50mA,160gf,6x6mm,SPST		
USW12	3404-000165	SWITCH-TACT;12V,50mA,160gf,6x6mm,SPST		
USW16	3404-000165	SWITCH-TACT;12V,50mA,160gf,6x6mm,SPST		
USW15	3404-000165	SWITCH-TACT;12V,50mA,160gf,6x6mm,SPST		
USW14	3404-000165	SWITCH-TACT;12V,50mA,160gf,6x6mm,SPST		
USW13	3404-000165	SWITCH-TACT;12V,50mA,160gf,6x6mm,SPST		
	AH92-01812A	**ASSY PCB-MAIN;MAX-KD100,MAIN**		
RBD2	0402-001258	DIODE-BRIDGE;GBU606,600V,6A,SIP-4,BK		
RBD1	0402-001258	DIODE-BRIDGE;GBU606,600V,6A,SIP-4,BK		
OJACK1	0603-001069	OPTIC TRANSMITTER;5V,8Mb/s,-,-17dBm,660n		
KIC1	1201-000191	IC-OP AMP;4558,DIP,8P,300MIL,DUAL,20V/mV		
FIC1	1201-000191	IC-OP AMP;4558,DIP,8P,300MIL,DUAL,20V/mV		
FIC1	1201-000191	IC-OP AMP;4558,DIP,8P,300MIL,DUAL,20V/mV		
DIC1	1201-001899	IC-PREAMP;HA12237F,QFP,40P,7X7MM,-,-,-PLA		
RIC2	1203-000242	IC-POSI.FIXED REG.;7812,TO-220,3P,-,PLAS		
RIC1	1203-001653	IC-VOLTAGE REGULATOR;4959,MULTIWATT,15P,		
KIC2	1204-001730	IC-ECHO;M65855P,DIP,16P,300MIL,PLASTIC		
FIC2	1204-001776	IC-SOUND PROCESSOR;TDA7442D,SOP,28P,295M		
RR34	2003-000005	R-METAL OXIDE(S);1ohm,5%,2W,AA,TP,4x12mm		
RR35	2003-000390	R-METAL OXIDE(S);0.27OHM,5%,2W,AA,TP,		
RR36	2003-000390	R-METAL OXIDE(S);0.27OHM,5%,2W,AA,TP,		
RR9	2003-000455	R-METAL OXIDE(S);100ohm,5%,2W,AA,TP,4x12		
RR3	2003-000701	R-METAL OXIDE(S);470ohm,5%,2W,AA,TP,4x12		
RC18	2201-002128	C-CERAMIC,DISC;4.7NF,20%,400V,Y5U,BK,15X		
RC19	2201-002128	C-CERAMIC,DISC;4.7NF,20%,400V,Y5U,BK,15X		
	2401-000129	C-AL;1000uF,20%,16V,GP,-,10x16mm,5		
	2401-001886	C-AL;1000uF,20%,35V,GP,BK,16x25mm,5		
RC1	2401-003381	C-AL;3300uF,20%,63V,GP,BK,22x40,10		
RC2	2401-003381	C-AL;3300uF,20%,63V,GP,BK,22x40,10		
RC4	2401-003755	C-AL;6800UF,20%,35V,BP,TP,22X40MM,1		
RC3	2401-003755	C-AL;6800UF,20%,35V,BP,TP,22X40MM,1		
OLP1	2901-001139	FILTER-EMI ON BOARD;50V,.5A,-,390PF,7X2.		
RRL1	3501-001008	RELAY-POWER;12VDC,530MW,10000MA,1FORMC,1		
RF1	3601-000170	FUSE-CARTRIDGE;250V,1.6A,TIME-LAG,GLASS,		
TCW1	3708-000122	CONNECTOR-FPC/FFC/PIC;11P,1.25mm,ANGLE,S		
FCW1	3708-000181	CONNECTOR-FPC/FFC/PIC;16P,1.25mm,STRAIGH		
FCW2	3708-000181	CONNECTOR-FPC/FFC/PIC;16P,1.25mm,STRAIGH		
FCW4	3708-000181	CONNECTOR-FPC/FFC/PIC;16P,1.25mm,STRAIGH		

Location no	Code no.	Description Specification	Remarks
RCW2	3711-000190	CONNECTOR-HEADER;1WALL,2P,1R,7.92MM,STRA	
DCW2	3711-000907	CONNECTOR-HEADER;BOX,3P,1R,2mm,STRAIGHT,	
ACW1	3711-001011	CONNECTOR-HEADER;BOX,5P,1R,2.5mm,STRAIGH	
CCW1	3711-001137	CONNECTOR-HEADER;BOX,8P,1R,2mm,STRAIGHT,	
RCW1	3711-003075	CONNECTOR-HEADER;NOWALL,6P,1R,8mm,STRAIG	
DCW3	3711-003107	CONNECTOR-HEADER;BOX,3P,1R,2.5mm,STRAIGH	
DCW1	3711-003111	CONNECTOR-HEADER;BOX,6P,1R,2.5mm,STRAIGH	
RCW5	3711-003112	CONNECTOR-HEADER;BOX,8P,1R,2.5mm,STRAIGH	
VJACK1	3722-000379	JACK-PIN;4P/2C,3.5mm,#16~22,SN	
	AH14-10004R	IC;M74HCU04,SOP,TAPE 14P	
	AH26-00135C	TRANS POWER-XFO TRANS POWER;XFO TRANS PO	
DL1	AH26-10002W	TRANS TRAP-COIL;BIAS-TRAP105K,BIAS-TRAP,	
DL2	AH26-10002W	TRANS TRAP-COIL;BIAS-TRAP105K,BIAS-TRAP,	
DL4	AH26-10003C	TRANS TRAP-COIL;PCHNS-5371EQJ,BIAS-TRAP,	
RL2	AH27-10001F	COIL-CHOKE;27uH,K,Q30,-,-,DR(6.5*7.5),-,	
RL1	AH27-10001F	COIL-CHOKE;27uH,K,Q30,-,-,DR(6.5*7.5),-,	
	AH37-00005A	JACK—RCA;1P,S-440B,YELLOW,-,SHIELD PLAT	
OCW1	AH39-00096B	LEAD CONNECTOR ASSY;RXD-DV9,#1007,28,AWG	
	AH39-00347B	LEAD CONNECTOR;-,-,-,2P,-,-,-,5295,51004	
RD8	0401-000101	DIODE-SWITCHING;1N4148,100V,200mA,DO-35,	
TD1	0401-000101	DIODE-SWITCHING;1N4148,100V,200mA,DO-35,	
TD2	0401-000101	DIODE-SWITCHING;1N4148,100V,200mA,DO-35,	
WD1	0401-000101	DIODE-SWITCHING;1N4148,100V,200mA,DO-35,	
KD31	0401-000101	DIODE-SWITCHING;1N4148,100V,200mA,DO-35,	
DD1	0401-000101	DIODE-SWITCHING;1N4148,100V,200mA,DO-35,	
FD1	0401-000101	DIODE-SWITCHING;1N4148,100V,200mA,DO-35,	
KD1	0401-000101	DIODE-SWITCHING;1N4148,100V,200mA,DO-35,	
KD2	0401-000101	DIODE-SWITCHING;1N4148,100V,200mA,DO-35,	
RD3	0402-000127	DIODE-RECTIFIER;1N4002,100V,1A,DO-41,TP	
RD4	0402-000127	DIODE-RECTIFIER;1N4002,100V,1A,DO-41,TP	
RD5	0402-000127	DIODE-RECTIFIER;1N4002,100V,1A,DO-41,TP	
RD6	0402-000127	DIODE-RECTIFIER;1N4002,100V,1A,DO-41,TP	
RD7	0402-000127	DIODE-RECTIFIER;1N4002,100V,1A,DO-41,TP	
RD1	0402-000127	DIODE-RECTIFIER;1N4002,100V,1A,DO-41,TP	
RD12	0402-000127	DIODE-RECTIFIER;1N4002,100V,1A,DO-41,TP	
RD13	0402-000127	DIODE-RECTIFIER;1N4002,100V,1A,DO-41,TP	
RD14	0402-000127	DIODE-RECTIFIER;1N4002,100V,1A,DO-41,TP	
RD2	0402-000127	DIODE-RECTIFIER;1N4002,100V,1A,DO-41,TP	
RZD7	0403-000352	DIODE-ZENER;UZ4.7BM,4.7V,4.4-5.0V,500mW,	
WZD1	0403-000354	DIODE-ZENER;UZ5.1B,5.1V,4.8-5.4V,500mW,D	
RZD1	0403-000354	DIODE-ZENER;UZ5.1B,5.1V,4.8-5.4V,500mW,D	
KZD1	0403-000354	DIODE-ZENER;UZ5.1B,5.1V,4.8-5.4V,500mW,D	
FZD1	0403-000372	DIODE-ZENER;UZ9.1BM,9.1V,8.7-9.4V,500mW,	
RZD5	0403-000380	DIODE-ZENER;UZP13B,13V,12.4-14.1V,1W,DO-	
RZD2	0403-000564	DIODE-ZENER;TZP16A,16V,15.3-17.1V,1W,DO-	
RZD3	0403-000570	DIODE-ZENER;UZP18B,18V,16.9-19.1V,1W,DO-	
RZD4	0403-001010	DIODE-ZENER;UZP5.6B,5.6V,5.2-6.0V,1W,DO	
RQ3	0501-000010	TR-SMALL SIGNAL;KSC1008,NPN,800mW,TO-92,	
DQ9	0501-000010	TR-SMALL SIGNAL;KSC1008,NPN,800mW,TO-92,	
DQ8	0501-000010	TR-SMALL SIGNAL;KSC1008,NPN,800mW,TO-92,	
DQ7	0501-000010	TR-SMALL SIGNAL;KSC1008,NPN,800mW,TO-92,	
DQ6	0501-000010	TR-SMALL SIGNAL;KSC1008,NPN,800mW,TO-92,	
RQ2	0501-000294	TR-SMALL SIGNAL;KSA708-Y,PNP,800mW,TO-92	
CQ3	0501-000331	TR-SMALL SIGNAL;KSC1009-Y,NPN,800mW,TO-9	
CQ2	0501-000331	TR-SMALL SIGNAL;KSC1009-Y,NPN,800mW,TO-9	
DQ4	0501-000369	TR-SMALL SIGNAL;KSC2331-Y,NPN,1000mW,TO-	
FQ1	0501-000398	TR-SMALL SIGNAL;KSC945,NPN,250mW,TO-92,T	
DQ1	0501-000398	TR-SMALL SIGNAL;KSC945,NPN,250mW,TO-92,T	
DQ3	0501-000610	TR-SMALL SIGNAL;KSA928A-Y,PNP,1W,TO-92L,	
RQ1	0501-000610	TR-SMALL SIGNAL;KSA928A-Y,PNP,1W,TO-92L,	
KQ4	0504-000118	TR-DIGITAL;KSR1003,NPN,300MW,22K/22K,TO-	
KQ3	0504-000118	TR-DIGITAL;KSR1003,NPN,300MW,22K/22K,TO-	
KQ2	0504-000122	TR-DIGITAL;KSR1009Y,NPN,300mW,4.7K,TO-92	
DQ5	0504-001003	TR-DIGITAL;KSR2003,PNP,300MW,22K/22K,TO-	
CQ1	0504-001003	TR-DIGITAL;KSR2003,PNP,300MW,22K/22K,TO-	
FR8	2001-000008	R-CARBON;15Kohm,5%,1/8W,AA,TP,1.8x3.2mm	
FR1	2001-000008	R-CARBON;15Kohm,5%,1/8W,AA,TP,1.8x3.2mm	
CR7	2001-000008	R-CARBON;15Kohm,5%,1/8W,AA,TP,1.8x3.2mm	
CR4	2001-000008	R-CARBON;15Kohm,5%,1/8W,AA,TP,1.8x3.2mm	
FR11	2001-000027	R-CARBON;100ohm,5%,1/4W,AA,TP,2.4x6.4mm	
RR10	2001-000038	R-CARBON;390ohm,5%,1/4W,AA,TP,2.4x6.4mm	
RR11	2001-000050	R-CARBON;2.7Kohm,5%,1/4W,AA,TP,2.4x6.4m	
DR18	2001-000111	R-CARBON;150ohm,5%,1/4W,AA,TP,2.4x6.4mm	
	2001-000118	R-CARBON(S);180ohm,5%,1/2W,AA,TP,2.4x6.4	
DR6	2001-000241	R-CARBON;1.5Kohm,5%,1/8W,AA,TP,1.8x3.2m	
DR13	2001-000241	R-CARBON;1.5Kohm,5%,1/8W,AA,TP,1.8x3.2m	
RR28	2001-000273	R-CARBON;100Kohm,5%,1/8W,AA,TP,1.8x3.2m	
RR15	2001-000273	R-CARBON;100Kohm,5%,1/8W,AA,TP,1.8x3.2m	
FR25	2001-000273	R-CARBON;100Kohm,5%,1/8W,AA,TP,1.8x3.2m	
FR24	2001-000273	R-CARBON;100Kohm,5%,1/8W,AA,TP,1.8x3.2m	
TR3	2001-000281	R-CARBON;100ohm,5%,1/8W,AA,TP,1.8x3.2mm	
TR4	2001-000281	R-CARBON;100ohm,5%,1/8W,AA,TP,1.8x3.2mm	
TR5	2001-000281	R-CARBON;100ohm,5%,1/8W,AA,TP,1.8x3.2mm	
TR6	2001-000281	R-CARBON;100ohm,5%,1/8W,AA,TP,1.8x3.2mm	
WR1	2001-000281	R-CARBON;100ohm,5%,1/8W,AA,TP,1.8x3.2mm	
TR2	2001-000281	R-CARBON;100ohm,5%,1/8W,AA,TP,1.8x3.2mm	
DR1	2001-000281	R-CARBON;100ohm,5%,1/8W,AA,TP,1.8x3.2mm	
DR17	2001-000281	R-CARBON;100ohm,5%,1/8W,AA,TP,1.8x3.2mm	
DR2	2001-000281	R-CARBON;100ohm,5%,1/8W,AA,TP,1.8x3.2mm	
DR4	2001-000281	R-CARBON;100ohm,5%,1/8W,AA,TP,1.8x3.2mm	
TR1	2001-000281	R-CARBON;100ohm,5%,1/8W,AA,TP,1.8x3.2mm	
WR9	2001-000290	R-CARBON;10Kohm,5%,1/8W,AA,TP,1.8x3.2mm	
KR26	2001-000290	R-CARBON;10Kohm,5%,1/8W,AA,TP,1.8x3.2mm	

Location no	Code no.	Description Specification	Remarks
KR23	2001-000290	R-CARBON;10Kohm,5%,1/8W,AA,TP,1.8x3.2mm	
KR20	2001-000290	R-CARBON;10Kohm,5%,1/8W,AA,TP,1.8x3.2mm	
DR24	2001-000290	R-CARBON;10Kohm,5%,1/8W,AA,TP,1.8x3.2mm	
DR9	2001-000302	R-CARBON;10ohm,5%,1/8W,AA,TP,1.8x3.2mm	
DR11	2001-000302	R-CARBON;10ohm,5%,1/8W,AA,TP,1.8x3.2mm	
FR21	2001-000319	R-CARBON;120Kohm,5%,1/8W,AA,TP,1.8x3.2m	
FR20	2001-000319	R-CARBON;120Kohm,5%,1/8W,AA,TP,1.8x3.2m	
TR12	2001-000331	R-CARBON;12Kohm,5%,1/8W,AA,TP,1.8x3.2mm	
TR9	2001-000331	R-CARBON;12Kohm,5%,1/8W,AA,TP,1.8x3.2mm	
CR5	2001-000411	R-CARBON;18Kohm,5%,1/8W,AA,TP,1.8x3.2mm	
CR2	2001-000411	R-CARBON;18Kohm,5%,1/8W,AA,TP,1.8x3.2mm	
RR4	2001-000429	R-CARBON;1Kohm,5%,1/8W,AA,TP,1.8x3.2mm	
JW10	2001-000429	R-CARBON;1Kohm,5%,1/8W,AA,TP,1.8x3.2mm	
FR22	2001-000429	R-CARBON;1Kohm,5%,1/8W,AA,TP,1.8x3.2mm	
DR10	2001-000435	R-CARBON;1Mohm,5%,1/8W,AA,TP,1.8x3.2mm	
KR12	2001-000449	R-CARBON;2.2Kohm,5%,1/8W,AA,TP,1.8x3.2m	
KR15	2001-000449	R-CARBON;2.2Kohm,5%,1/8W,AA,TP,1.8x3.2m	
KR31	2001-000449	R-CARBON;2.2Kohm,5%,1/8W,AA,TP,1.8x3.2m	
FR17	2001-000449	R-CARBON;2.2Kohm,5%,1/8W,AA,TP,1.8x3.2m	
DR13	2001-000449	R-CARBON;2.2Kohm,5%,1/8W,AA,TP,1.8x3.2m	
DR6	2001-000449	R-CARBON;2.2Kohm,5%,1/8W,AA,TP,1.8x3.2m	
FR16	2001-000449	R-CARBON;2.2Kohm,5%,1/8W,AA,TP,1.8x3.2m	
RR19	2001-000472	R-CARBON;2.7Kohm,5%,1/8W,AA,TP,1.8x3.2m	
WR3	2001-000515	R-CARBON;220ohm,5%,1/8W,AA,TP,1.8x3.2mm	
WR10	2001-000522	R-CARBON;22Kohm,5%,1/8W,AA,TP,1.8x3.2mm	
DR5	2001-000522	R-CARBON;22Kohm,5%,1/8W,AA,TP,1.8x3.2mm	
DR12	2001-000522	R-CARBON;22Kohm,5%,1/8W,AA,TP,1.8x3.2mm	
TR8	2001-000563	R-CARBON;27Kohm,5%,1/8W,AA,TP,1.8x3.2mm	
RR12	2001-000563	R-CARBON;27Kohm,5%,1/8W,AA,TP,1.8x3.2mm	
DR7	2001-000563	R-CARBON;27Kohm,5%,1/8W,AA,TP,1.8x3.2mm	
DR14	2001-000563	R-CARBON;27Kohm,5%,1/8W,AA,TP,1.8x3.2mm	
DR38	2001-000563	R-CARBON;27Kohm,5%,1/8W,AA,TP,1.8x3.2mm	
DR39	2001-000563	R-CARBON;27Kohm,5%,1/8W,AA,TP,1.8x3.2mm	
FR4	2001-000591	R-CARBON;3.3Kohm,5%,1/8W,AA,TP,1.8x3.2m	
FR5	2001-000591	R-CARBON;3.3Kohm,5%,1/8W,AA,TP,1.8x3.2m	
FR7	2001-000591	R-CARBON;3.3Kohm,5%,1/8W,AA,TP,1.8x3.2m	
WR5	2001-000591	R-CARBON;3.3Kohm,5%,1/8W,AA,TP,1.8x3.2m	
DR20	2001-000591	R-CARBON;3.3Kohm,5%,1/8W,AA,TP,1.8x3.2m	
DR21	2001-000591	R-CARBON;3.3Kohm,5%,1/8W,AA,TP,1.8x3.2m	
DR28	2001-000591	R-CARBON;3.3Kohm,5%,1/8W,AA,TP,1.8x3.2m	
FR2	2001-000591	R-CARBON;3.3Kohm,5%,1/8W,AA,TP,1.8x3.2m	
RR6	2001-000613	R-CARBON;3.9Kohm,5%,1/8W,AA,TP,1.8x3.2m	
FR13	2001-000645	R-CARBON;330Kohm,5%,1/8W,AA,TP,1.8x3.2m	
RR1A	2001-000660	R-CARBON;33Kohm,5%,1/8W,AA,TP,1.8x3.2mm	
KR8	2001-000660	R-CARBON;33Kohm,5%,1/8W,AA,TP,1.8x3.2mm	
KR7	2001-000660	R-CARBON;33Kohm,5%,1/8W,AA,TP,1.8x3.2mm	
WR4	2001-000702	R-CARBON;39Kohm,5%,1/8W,AA,TP,1.8x3.2mm	
RR14	2001-000734	R-CARBON;4.7Kohm,5%,1/8W,AA,TP,1.8x3.2m	
KR9	2001-000734	R-CARBON;4.7Kohm,5%,1/8W,AA,TP,1.8x3.2m	
KR6	2001-000734	R-CARBON;4.7Kohm,5%,1/8W,AA,TP,1.8x3.2m	
KR27	2001-000734	R-CARBON;4.7Kohm,5%,1/8W,AA,TP,1.8x3.2m	
RR5	2001-000734	R-CARBON;4.7Kohm,5%,1/8W,AA,TP,1.8x3.2m	
TR10	2001-000734	R-CARBON;4.7Kohm,5%,1/8W,AA,TP,1.8x3.2m	
TR11	2001-000734	R-CARBON;4.7Kohm,5%,1/8W,AA,TP,1.8x3.2m	
TR7	2001-000734	R-CARBON;4.7Kohm,5%,1/8W,AA,TP,1.8x3.2m	
DR102	2001-000734	R-CARBON;4.7Kohm,5%,1/8W,AA,TP,1.8x3.2m	
DR15	2001-000734	R-CARBON;4.7Kohm,5%,1/8W,AA,TP,1.8x3.2m	
DR16	2001-000734	R-CARBON;4.7Kohm,5%,1/8W,AA,TP,1.8x3.2m	
DR22	2001-000734	R-CARBON;4.7Kohm,5%,1/8W,AA,TP,1.8x3.2m	
JW102	2001-000734	R-CARBON;4.7Kohm,5%,1/8W,AA,TP,1.8x3.2m	
FR18	2001-000734	R-CARBON;4.7Kohm,5%,1/8W,AA,TP,1.8x3.2m	
DR29	2001-000734	R-CARBON;4.7Kohm,5%,1/8W,AA,TP,1.8x3.2m	
DR25	2001-000734	R-CARBON;4.7Kohm,5%,1/8W,AA,TP,1.8x3.2m	
RR24	2001-000773	R-CARBON;470Kohm,5%,1/8W,AA,TP,1.8x3.2m	
FR23	2001-000773	R-CARBON;470Kohm,5%,1/8W,AA,TP,1.8x3.2m	
FR6	2001-000786	R-CARBON;47Kohm,5%,1/8W,AA,TP,1.8x3.2mm	
KR16	2001-000786	R-CARBON;47Kohm,5%,1/8W,AA,TP,1.8x3.2mm	
KR17	2001-000786	R-CARBON;47Kohm,5%,1/8W,AA,TP,1.8x3.2mm	
WR12	2001-000786	R-CARBON;47Kohm,5%,1/8W,AA,TP,1.8x3.2mm	
WR13	2001-000786	R-CARBON;47Kohm,5%,1/8W,AA,TP,1.8x3.2mm	
WR2	2001-000786	R-CARBON;47Kohm,5%,1/8W,AA,TP,1.8x3.2mm	
CR3	2001-000786	R-CARBON;47Kohm,5%,1/8W,AA,TP,1.8x3.2mm	
CR6	2001-000786	R-CARBON;47Kohm,5%,1/8W,AA,TP,1.8x3.2mm	
DR19	2001-000786	R-CARBON;47Kohm,5%,1/8W,AA,TP,1.8x3.2mm	
FR14	2001-000786	R-CARBON;47Kohm,5%,1/8W,AA,TP,1.8x3.2mm	
FR15	2001-000786	R-CARBON;47Kohm,5%,1/8W,AA,TP,1.8x3.2mm	
FR3	2001-000786	R-CARBON;47Kohm,5%,1/8W,AA,TP,1.8x3.2mm	
FR9	2001-000802	R-CARBON;5.6Kohm,5%,1/8W,AA,TP,1.8x3.2m	
FR10	2001-000802	R-CARBON;5.6Kohm,5%,1/8W,AA,TP,1.8x3.2m	
FR21	2001-000864	R-CARBON;56Kohm,5%,1/8W,AA,TP,1.8x3.2mm	
FR20	2001-000864	R-CARBON;56Kohm,5%,1/8W,AA,TP,1.8x3.2mm	
DR37	2001-000890	R-CARBON;6.8Kohm,5%,1/8W,AA,TP,1.8x3.2m	
KR4	2001-000890	R-CARBON;6.8Kohm,5%,1/8W,AA,TP,1.8x3.2m	
KR5	2001-000890	R-CARBON;6.8Kohm,5%,1/8W,AA,TP,1.8x3.2m	
RR7	2001-000890	R-CARBON;6.8Kohm,5%,1/8W,AA,TP,1.8x3.2m	
DR36	2001-000890	R-CARBON;6.8Kohm,5%,1/8W,AA,TP,1.8x3.2m	
DR12	2001-000890	R-CARBON;6.8Kohm,5%,1/8W,AA,TP,1.8x3.2m	
DR27	2001-000890	R-CARBON;6.8Kohm,5%,1/8W,AA,TP,1.8x3.2m	
DR34	2001-000890	R-CARBON;6.8Kohm,5%,1/8W,AA,TP,1.8x3.2m	
DR35	2001-000890	R-CARBON;6.8Kohm,5%,1/8W,AA,TP,1.8x3.2m	
DR33	2001-000924	R-CARBON;680ohm,5%,1/8W,AA,TP,1.8x3.2mm	
DR32	2001-000924	R-CARBON;680ohm,5%,1/8W,AA,TP,1.8x3.2mm	
DR31	2001-000924	R-CARBON;680ohm,5%,1/8W,AA,TP,1.8x3.2mm	

Location no	Code no.	Description	Specification	Remarks
DR30	2001-000924	R-CARBON;680ohm,5%,1/8W,AA,TP,1.8x3.2mm		
KR19	2001-000977	R-CARBON;8.2KOHM,5%,1/8W,AA,TP,1.8x3.2m		
DR8	2001-000977	R-CARBON;8.2KOHM,5%,1/8W,AA,TP,1.8x3.2m		
DR26	2001-000977	R-CARBON;8.2KOHM,5%,1/8W,AA,TP,1.8x3.2m		
RR13	2001-001004	R-CARBON;82ohm,5%,1/4W,AA,TP,2.4x6.4mm		
DR23	2001-001096	R-CARBON(S);2.2ohm,5%,1/2W,AA,TP,2.4x6.4		
RR2	2001-001153	R-CARBON(S);47ohm,5%,1/2W,AA,TP,2.4x6.4m		
RR1	2001-001153	R-CARBON(S);47ohm,5%,1/2W,AA,TP,2.4x6.4m		
RR8	2003-000542	R-METAL OXIDE(S);1ohm,5%,1W,AA,TP,3.3x9m		
KC4	2201-000146	C-CERAMIC,DISC;0.1NF,5%,50V,SL,TP,5X3.5M		
KC3	2201-000146	C-CERAMIC,DISC;0.1NF,5%,50V,SL,TP,5X3.5M		
FC6	2201-000146	C-CERAMIC,DISC;0.1NF,5%,50V,SL,TP,5X3.5M		
FC3	2201-000146	C-CERAMIC,DISC;0.1NF,5%,50V,SL,TP,5X3.5M		
RC26	2201-000161	C-CERAMIC,DISC;10NF,+80-20%,500V,Y5V,TP,		
RC25	2201-000161	C-CERAMIC,DISC;10NF,+80-20%,500V,Y5V,TP,		
RC24	2201-000161	C-CERAMIC,DISC;10NF,+80-20%,500V,Y5V,TP,		
RC23	2201-000161	C-CERAMIC,DISC;10NF,+80-20%,500V,Y5V,TP,		
RC22	2201-000161	C-CERAMIC,DISC;10NF,+80-20%,500V,Y5V,TP,		
OC4	2201-000300	C-CERAMIC,DISC;1NF,20%,50V,Y5T,TP,5X3MM,		
DC23	2201-000300	C-CERAMIC,DISC;1NF,20%,50V,Y5T,TP,5X3MM,		
DC22	2201-000300	C-CERAMIC,DISC;1NF,20%,50V,Y5T,TP,5X3MM,		
DC19	2201-000300	C-CERAMIC,DISC;1NF,20%,50V,Y5T,TP,5X3MM,		
DC18	2201-000300	C-CERAMIC,DISC;1NF,20%,50V,Y5T,TP,5X3MM,		
FC29	2201-000368	C-CERAMIC,DISC;0.22NF,10%,50V,SL,TP,6.5X		
FC3	2201-000368	C-CERAMIC,DISC;0.22NF,10%,50V,SL,TP,6.5X		
FC6	2201-000368	C-CERAMIC,DISC;0.22NF,10%,50V,SL,TP,6.5X		
KC7	2201-000368	C-CERAMIC,DISC;0.22NF,10%,50V,SL,TP,6.5X		
KC8	2201-000368	C-CERAMIC,DISC;0.22NF,10%,50V,SL,TP,6.5X		
DC17	2201-000368	C-CERAMIC,DISC;0.22NF,10%,50V,SL,TP,6.5X		
DC33	2201-000368	C-CERAMIC,DISC;0.22NF,10%,50V,SL,TP,6.5X		
FC26	2201-000368	C-CERAMIC,DISC;0.22NF,10%,50V,SL,TP,6.5X		
FC27	2201-000368	C-CERAMIC,DISC;0.22NF,10%,50V,SL,TP,6.5X		
FC28	2201-000368	C-CERAMIC,DISC;0.22NF,10%,50V,SL,TP,6.5X		
	2201-000381	C-CERAMIC,DISC;22nF,+80%,50V,-,,8x4mm,-		
OC1	2201-000487	C-CERAMIC,DISC;33pF,5%,50V,SL,TP,5x3,5m		
OC1	2201-000487	C-CERAMIC,DISC;33pF,5%,50V,SL,TP,5x3,5m		
DC1	2201-000674	C-CERAMIC,DISC;0.82NF,10%,50V,Y5P,BK,5X3		
DC29	2201-000674	C-CERAMIC,DISC;0.82NF,10%,50V,Y5P,BK,5X3		
KC18	2202-000780	C-CERAMIC,MLC-AXIAL;100nF,+80-20%,50V,Y5		
EMC1	2202-000780	C-CERAMIC,MLC-AXIAL;100nF,+80-20%,50V,Y5		
TC7	2202-000781	C-CERAMIC,MLC-AXIAL;100pF,10%,50V,Y5P,TP		
TC6	2202-000781	C-CERAMIC,MLC-AXIAL;100pF,10%,50V,Y5P,TP		
TC5	2202-000781	C-CERAMIC,MLC-AXIAL;100pF,10%,50V,Y5P,TP		
TC4	2202-000781	C-CERAMIC,MLC-AXIAL;100pF,10%,50V,Y5P,TP		
TC3	2202-000781	C-CERAMIC,MLC-AXIAL;100pF,10%,50V,Y5P,TP		
TC2	2202-000781	C-CERAMIC,MLC-AXIAL;100pF,10%,50V,Y5P,TP		
TC1	2202-000781	C-CERAMIC,MLC-AXIAL;100pF,10%,50V,Y5P,TP		
TC20	2202-000796	C-CERAMIC,MLC-AXIAL;1NF,10%,50V,Y5P,TP,3		
EMC2	2202-000796	C-CERAMIC,MLC-AXIAL;1NF,10%,50V,Y5P,TP,3		
KC20	2202-000797	C-CERAMIC,MLC-AXIAL;10NF,30%,16V,Y5S,TP,		
KC17	2202-000797	C-CERAMIC,MLC-AXIAL;10NF,30%,16V,Y5S,TP,		
EMC3	2202-000806	C-CERAMIC,MLC-AXIAL;220pF,10%,50V,Y5P,TP		
EMC4	2202-000806	C-CERAMIC,MLC-AXIAL;220pF,10%,50V,Y5P,TP		
KC19	2202-000809	C-CERAMIC,MLC-AXIAL;3.3nF,20%,16V,Y5R,-,		
KC10	2202-000829	C-CERAMIC,MLC-AXIAL;0.82NF,10%,50V,Y5P,T		
KC16	2202-000854	C-CERAMIC,MLC-AXIAL;47nF,30%,50V,Y5R,TP,		
KC15	2202-000854	C-CERAMIC,MLC-AXIAL;47nF,30%,50V,Y5R,TP,		
FC14	2301-000361	C-FILM,PEF;1.2nF,10%,50V,TP,-,5mm		
FC16	2301-000375	C-FILM,PEF;100nF,10%,TP,50V,11x12.5x6.5,		
FC17	2301-000375	C-FILM,PEF;100nF,10%,TP,50V,11x12.5x6.5,		
FC32	2301-000375	C-FILM,PEF;100nF,10%,TP,50V,11x12.5x6.5,		
KC2	2301-000375	C-FILM,PEF;100nF,10%,TP,50V,11x12.5x6.5,		
KC5	2301-000375	C-FILM,PEF;100nF,10%,TP,50V,11x12.5x6.5,		
FC15	2301-000375	C-FILM,PEF;100nF,10%,TP,50V,11x12.5x6.5,		
DC10	2301-000375	C-FILM,PEF;100nF,10%,TP,50V,11x12.5x6.5,		
DC25	2301-000375	C-FILM,PEF;100nF,10%,TP,50V,11x12.5x6.5,		
DC26	2301-000375	C-FILM,PEF;100nF,10%,TP,50V,11x12.5x6.5,		
DC7	2301-000375	C-FILM,PEF;100nF,10%,TP,50V,11x12.5x6.5,		
FC13	2301-000375	C-FILM,PEF;100nF,10%,TP,50V,11x12.5x6.5,		
KC12	2301-000379	C-FILM,PEF;10nF,10%,50V,TP,6x12x3.5mm,-		
KC11	2301-000379	C-FILM,PEF;10nF,10%,50V,TP,6x12x3.5mm,-		
DC24	2301-000379	C-FILM,PEF;10nF,10%,50V,TP,6x12x3.5mm,-		
DC11	2301-000379	C-FILM,PEF;10nF,10%,50V,TP,6x12x3.5mm,-		
DC16	2301-000404	C-FILM,PEF;2.2nF,10%,50V,TP,5.5x12x3mm,-		
DC15	2301-000404	C-FILM,PEF;2.2nF,10%,50V,TP,5.5x12x3mm,-		
DC14	2301-000404	C-FILM,PEF;2.2nF,10%,50V,TP,5.5x12x3mm,-		
DC13	2301-000407	C-FILM,PEF;2.7nF,10%,50V,TP,5.5x12x3mm,-		
DC31	2301-000412	C-FILM,PEF;22nF,10%,50V,TP,8x12x4mm,-		
DC8	2301-000412	C-FILM,PEF;22nF,10%,50V,TP,8x12x4mm,-		
WC9	2301-000412	C-FILM,PEF;22nF,10%,50V,TP,8x12x4mm,-		
KC13	2301-000442	C-FILM,PEF;4.7nF,10%,50V,TP,5.5x7x3mm,5m		
CC2	2301-000449	C-FILM,PEF;47nF,10%,50V,TP,9.5x12.5x5mm,		
FC11	2301-000454	C-FILM,PEF;5.6nF,10%,50V,TP,6x12x3,3.5mm		
FC12	2301-000454	C-FILM,PEF;5.6nF,10%,50V,TP,6x12x3,3.5mm		
KC14	2301-000474	C-FILM,PEF;8.2nF,10%,50V,TP,6.5x12x3.5,3		
RC15	2401-000240	C-AL;100uF,20%,10V,GP,TP,5x11,5		
KC23	2401-000240	C-AL;100uF,20%,10V,GP,TP,5x11,5		
FC5	2401-000240	C-AL;100uF,20%,10V,GP,TP,5x11,5		
CC4	2401-000240	C-AL;100uF,20%,10V,GP,TP,5x11,5		
RC6	2401-000357	C-AL;100UF,0.2,50V,GP,8*12,5MM,SSL		
RC5	2401-000357	C-AL;100UF,0.2,50V,GP,8*12,5MM,SSL		
RC9	2401-000438	C-AL;10UF,20%,25V,GP,-,5X11,5		
DC30	2401-000438	C-AL;10UF,20%,25V,GP,-,5X11,5		

Location no	Code no.	Description	Specification	Remarks
CC5	2401-000438	C-AL;10UF,20%,25V,GP,-,5X11,5		
WC8	2401-000475	C-AL;10uF,20%,50V,GP,TP,5x11mm,5mm		
WC3	2401-000475	C-AL;10uF,20%,50V,GP,TP,5x11mm,5mm		
WC2	2401-000475	C-AL;10uF,20%,50V,GP,TP,5x11mm,5mm		
WC1	2401-000475	C-AL;10uF,20%,50V,GP,TP,5x11mm,5mm		
RC12	2401-000830	C-AL;220uF,20%,25V,GP,TP,8x11.5,5		
RC11	2401-000830	C-AL;220uF,20%,25V,GP,TP,8x11.5,5		
RC10	2401-000907	C-AL;22uF,20%,16V,GP,TP,5x11mm,5mm		
KC22	2401-000907	C-AL;22uF,20%,16V,GP,TP,5x11mm,5mm		
FC10	2401-000907	C-AL;22uF,20%,16V,GP,TP,5x11mm,5mm		
CC1	2401-000907	C-AL;22uF,20%,16V,GP,TP,5x11mm,5mm		
FC34	2401-001022	C-AL;3.3UF,20%,50V,GP,TP,5X11,5		
FC35	2401-001022	C-AL;3.3UF,20%,50V,GP,TP,5X11,5		
FC36	2401-001022	C-AL;3.3UF,20%,50V,GP,TP,5X11,5		
DC35	2401-001022	C-AL;3.3UF,20%,50V,GP,TP,5X11,5		
DC36	2401-001022	C-AL;3.3UF,20%,50V,GP,TP,5X11,5		
FC1	2401-001022	C-AL;3.3UF,20%,50V,GP,TP,5X11,5		
DC5	2401-001080	C-AL;330nF,20%,50V,GP,5*11,5mm,TP		
DC4	2401-001102	C-AL;330uF,20%,16V,GP,TP,8x11.5mm,5		
RC17	2401-001538	C-AL;47uF,20%,25V,GP,TP,5x11mm,5mm		
RC8	2401-001625	C-AL;6.8uF,20%,50V,GP,TP,5x11,5		
FC5	2401-001893	C-AL;100uF,20%,16V,GP,6*7,5MM,TP		
FC31	2401-001912	C-AL;1uF,20%,50V,GP,5*11,5mm,TP		
FC8	2401-001912	C-AL;1uF,20%,50V,GP,5*11,5mm,TP		
FC9	2401-001912	C-AL;1uF,20%,50V,GP,5*11,5mm,TP		
RC7	2401-001912	C-AL;1uF,20%,50V,GP,5*11,5mm,TP		
DC20	2401-001912	C-AL;1uF,20%,50V,GP,5*11,5mm,TP		
FC22	2401-001912	C-AL;1uF,20%,50V,GP,5*11,5mm,TP		
FC23	2401-001912	C-AL;1uF,20%,50V,GP,5*11,5mm,TP		
FC30	2401-001912	C-AL;1uF,20%,50V,GP,5*11,5mm,TP		
KC9	2401-001954	C-AL;4.7uF,20%,50V,GP,TP,5x11mm,5mm		
KC6	2401-001954	C-AL;4.7uF,20%,50V,GP,TP,5x11mm,5mm		
FC4	2401-001954	C-AL;4.7uF,20%,50V,GP,TP,5x11mm,5mm		
FC33	2401-001954	C-AL;4.7uF,20%,50V,GP,TP,5x11mm,5mm		
FC2	2401-001954	C-AL;4.7uF,20%,50V,GP,TP,5x11mm,5mm		
	2401-001968	C-AL;470nF,20%,50V,GP,TP,5x11mm,5mm		
DC32	2401-001975	C-AL;47uF,20%,16V,GP,TP,5x11mm,5mm		
DC21	2401-001975	C-AL;47uF,20%,16V,GP,TP,5x11mm,5mm		
DC2	2401-001975	C-AL;47uF,20%,16V,GP,TP,5x11mm,5mm		
DC12	2401-001975	C-AL;47uF,20%,16V,GP,TP,5x11mm,5mm		
FC18	2401-002180	C-AL;2.2uF,20%,50V,GP,TP,5x11mm,5mm		
FC19	2401-002180	C-AL;2.2uF,20%,50V,GP,TP,5x11mm,5mm		
KC21	2401-002180	C-AL;2.2uF,20%,50V,GP,TP,5x11mm,5mm		
KC6	2401-002180	C-AL;2.2uF,20%,50V,GP,TP,5x11mm,5mm		
KC9	2401-002180	C-AL;2.2uF,20%,50V,GP,TP,5x11mm,5mm		
DC9	2401-002180	C-AL;2.2uF,20%,50V,GP,TP,5x11mm,5mm		
DC27	2401-002180	C-AL;2.2uF,20%,50V,GP,TP,5x11mm,5mm		
DC28	2401-002180	C-AL;2.2uF,20%,50V,GP,TP,5x11mm,5mm		
DC34	2401-002180	C-AL;2.2uF,20%,50V,GP,TP,5x11mm,5mm		
DC6	2401-002180	C-AL;2.2uF,20%,50V,GP,TP,5x11mm,5mm		
DC8	2401-002180	C-AL;2.2uF,20%,50V,GP,TP,5x11mm,5mm		
CL1	2701-000116	INDUCTOR-AXIAL;10uH,10%,4.2x9.8mm		
CL2	2701-000179	INDUCTOR-AXIAL;33uH,10%,4.2x9.8mm		
DL3	2701-000298	INDUCTOR-AXIAL;470uH,10%,4.2x9.8mm		
	3301-000297	BEAD-AXIAL;3.6x1.2x5.7mm,1400,2900G		
RF1	3602-000147	FUSE-CLIP;250V,7.5A,30mohm		
RF2	3602-000147	FUSE-CLIP;250V,7.5A,30mohm		
	AH92-01813A	**ASSY PCB-AUDIO;MAX-KD100,AUDIO**		
AIC1	1201-001599	IC-POWER AMP;402-090,SIP,15P,-,DUAL,30dB		
AR5R	2003-000390	R-METAL OXIDE(S);0.27OHM,5%,2W,AA,TP,		
AR5L	2003-000390	R-METAL OXIDE(S);0.27OHM,5%,2W,AA,TP,		
AR4R	2003-000390	R-METAL OXIDE(S);0.27OHM,5%,2W,AA,TP,		
AR4L	2003-000390	R-METAL OXIDE(S);0.27OHM,5%,2W,AA,TP,		
AR402	2003-000734	R-METAL OXIDE(S);560ohm,5%,2W,AA,TP,4x12		
AR401	2003-000734	R-METAL OXIDE(S);560ohm,5%,2W,AA,TP,4x12		
AC302	2401-000230	C-AL;100uF,20%,100V,GP,TP,12.5x20mm		
AC301	2401-000230	C-AL;100uF,20%,100V,GP,TP,12.5x20mm		
AC2R	2401-000230	C-AL;100uF,20%,100V,GP,TP,12.5x20mm		
AC2L	2401-000230	C-AL;100uF,20%,100V,GP,TP,12.5x20mm		
AC20	2401-000871	C-AL;220uF,20%,50V,GP,-,10x16mm,5mm		
ARL1	3501-001197	RELAY-MINIATURE;12VDC,0.54W,44.4MA,1FORM		
ACW1	3708-000181	CONNECTOR-FPC/FFC/PIC;16P,1.25mm,STRAIGH		
KCWB	3711-000820	CONNECTOR-HEADER;BOX,2P,1R,2.5MM,STRAIGH		
SPK1	3716-001132	TERMINAL-BLOCK;SOLDER,4P,-,-,-		
AL3	AH27-90001A	COIL-SPRING;-,2.2UH,-,-,-,SPRING,-,-,-,-		
AL2	AH27-90001A	COIL-SPRING;-,2.2UH,-,-,-,SPRING,-,-,-,-		
AL1R	AH27-90001A	COIL-SPRING;-,2.2UH,-,-,-,SPRING,-,-,-,-		
AL1L	AH27-90001A	COIL-SPRING;-,2.2UH,-,-,-,SPRING,-,-,-,-		
ACW2	AH39-00249A	LEAD CONNECTOR ASSY;MX-K5,#1007,22AWG,UL		
ACW3	AH39-00408A	LEAD CONNECTOR ASSY;MAX-DL44,1007#22,-,2		
AD6L	0401-000101	DIODE-SWITCHING;1N4148,100V,200mA,DO-35,		
AD6R	0401-000101	DIODE-SWITCHING;1N4148,100V,200mA,DO-35,		
AD7	0401-000101	DIODE-SWITCHING;1N4148,100V,200mA,DO-35,		
AD5	0402-000127	DIODE-RECTIFIER;1N4002,100V,1A,DO-41,TP		
AQ6	0501-000010	TR-SMALL SIGNAL;KSC1008,NPN,800mW,TO-92,		
AQ7L	0501-000296	TR-SMALL SIGNAL;KSA709-Y,PNP,800mW,TO-92		
AQ7R	0501-000296	TR-SMALL SIGNAL;KSA709-Y,PNP,800mW,TO-92		
AQ11	0501-000331	TR-SMALL SIGNAL;KSC1009-Y,NPN,800mW,TO-9		
AQ10	0501-000331	TR-SMALL SIGNAL;KSC1009-Y,NPN,800mW,TO-9		
AQ7	0501-000407	TR-SMALL SIGNAL;KSD471A-Y,NPN,800mW,TO-9		
AQ5	0501-000407	TR-SMALL SIGNAL;KSD471A-Y,NPN,800mW,TO-9		
AQ2R	0501-000407	TR-SMALL SIGNAL;KSD471A-Y,NPN,800mW,TO-9		

Location no	Code no.	Description Specification	Remarks
AQ2L	0501-000407	TR-SMALL SIGNAL;KSD471A-Y,NPN,800mW,TO-9	
AQ8	0501-000610	TR-SMALL SIGNAL;KSA928A-Y,PNP,1W,TO-92L,	
AQ1A	0504-000118	TR-DIGITAL;KSR1003,NPN,300MW,22K/22K,TO-	
AQ1	0504-001003	TR-DIGITAL;KSR2003,PNP,300MW,22K/22K,TO-	
AR40R	2001-000008	R-CARBON;15Kohm,5%,1/8W,AA,TP,1.8x3.2mm	
AR40L	2001-000008	R-CARBON;15Kohm,5%,1/8W,AA,TP,1.8x3.2mm	
AR6L	2001-000017	R-CARBON;4.7ohm,5%,1/4W,AA,TP,2.4x6.4mm	
AR6R	2001-000017	R-CARBON;4.7ohm,5%,1/4W,AA,TP,2.4x6.4mm	
AR77	2001-000065	R-CARBON;10Kohm,5%,1/4W,AA,TP,2.4x6.4mm	
AJR9	2001-000073	R-CARBON;33KOHM,5%,1/4W,AA,TP,2.4X6.4MM	
AR403	2001-000118	R-CARBON(S);180ohm,5%,1/2W,AA,TP,2.4x6.4	
AR404	2001-000118	R-CARBON(S);180ohm,5%,1/2W,AA,TP,2.4x6.4	
AR2R	2001-000221	R-CARBON;1.2Kohm,5%,1/8W,AA,TP,1.8x3.2m	
AR2L	2001-000221	R-CARBON;1.2Kohm,5%,1/8W,AA,TP,1.8x3.2m	
AR46	2001-000273	R-CARBON;100Kohm,5%,1/8W,AA,TP,1.8x3.2m	
AR44R	2001-000273	R-CARBON;100Kohm,5%,1/8W,AA,TP,1.8x3.2m	
AR44L	2001-000273	R-CARBON;100Kohm,5%,1/8W,AA,TP,1.8x3.2m	
AR26	2001-000273	R-CARBON;100Kohm,5%,1/8W,AA,TP,1.8x3.2m	
AR9	2001-000290	R-CARBON;10Kohm,5%,1/8W,AA,TP,1.8x3.2mm	
AR31	2001-000290	R-CARBON;10Kohm,5%,1/8W,AA,TP,1.8x3.2mm	
AR30	2001-000290	R-CARBON;10Kohm,5%,1/8W,AA,TP,1.8x3.2mm	
AR1R	2001-000290	R-CARBON;10Kohm,5%,1/8W,AA,TP,1.8x3.2mm	
AR1L	2001-000290	R-CARBON;10Kohm,5%,1/8W,AA,TP,1.8x3.2mm	
AR41R	2001-000302	R-CARBON;10ohm,5%,1/8W,AA,TP,1.8x3.2mm	
AR41L	2001-000302	R-CARBON;10ohm,5%,1/8W,AA,TP,1.8x3.2mm	
AR405R	2001-000429	R-CARBON;1Kohm,5%,1/8W,AA,TP,1.8x3.2mm	
AR405L	2001-000429	R-CARBON;1Kohm,5%,1/8W,AA,TP,1.8x3.2mm	
AR7L	2001-000449	R-CARBON;2.2Kohm,5%,1/8W,AA,TP,1.8x3.2m	
AR7R	2001-000449	R-CARBON;2.2Kohm,5%,1/8W,AA,TP,1.8x3.2m	
AR25	2001-000515	R-CARBON;220ohm,5%,1/8W,AA,TP,1.8x3.2mm	
AR47	2001-000522	R-CARBON;22Kohm,5%,1/8W,AA,TP,1.8x3.2mm	
AR42R	2001-000522	R-CARBON;22Kohm,5%,1/8W,AA,TP,1.8x3.2mm	
AR42L	2001-000522	R-CARBON;22Kohm,5%,1/8W,AA,TP,1.8x3.2mm	
AR405R	2001-000522	R-CARBON;22Kohm,5%,1/8W,AA,TP,1.8x3.2mm	
AR405L	2001-000522	R-CARBON;22Kohm,5%,1/8W,AA,TP,1.8x3.2mm	
AR8R	2001-000591	R-CARBON;3.3Kohm,5%,1/8W,AA,TP,1.8x3.2m	
AR8L	2001-000591	R-CARBON;3.3Kohm,5%,1/8W,AA,TP,1.8x3.2m	
AR33	2001-000591	R-CARBON;3.3Kohm,5%,1/8W,AA,TP,1.8x3.2m	
AR32	2001-000591	R-CARBON;3.3Kohm,5%,1/8W,AA,TP,1.8x3.2m	
AR20	2001-000591	R-CARBON;3.3Kohm,5%,1/8W,AA,TP,1.8x3.2m	
AR43R	2001-000734	R-CARBON;4.7Kohm,5%,1/8W,AA,TP,1.8x3.2m	
AR43L	2001-000734	R-CARBON;4.7Kohm,5%,1/8W,AA,TP,1.8x3.2m	
AR45R	2001-000786	R-CARBON;47Kohm,5%,1/8W,AA,TP,1.8x3.2mm	
AR45L	2001-000786	R-CARBON;47Kohm,5%,1/8W,AA,TP,1.8x3.2mm	
AR310	2001-000786	R-CARBON;47Kohm,5%,1/8W,AA,TP,1.8x3.2mm	
AR309	2001-000786	R-CARBON;47Kohm,5%,1/8W,AA,TP,1.8x3.2mm	
AR56R	2001-000864	R-CARBON;56Kohm,5%,1/8W,AA,TP,1.8x3.2mm	
AR56L	2001-000864	R-CARBON;56Kohm,5%,1/8W,AA,TP,1.8x3.2mm	
AR3R	2001-000864	R-CARBON;56Kohm,5%,1/8W,AA,TP,1.8x3.2mm	
AR3L	2001-000864	R-CARBON;56Kohm,5%,1/8W,AA,TP,1.8x3.2mm	
AR78	2003-000008	R-METAL OXIDE(S);100ohm,5%,1W,AA,TP,3.3x	
AR13	2003-000008	R-METAL OXIDE(S);100ohm,5%,1W,AA,TP,3.3x	
AR15L	2003-000689	R-METAL OXIDE(S);4.7ohm,5%,1W,AA,TP,3.3x	
AR15R	2003-000689	R-METAL OXIDE(S);4.7ohm,5%,1W,AA,TP,3.3x	
AC58R	2201-000368	C-CERAMIC,DISC;0.22NF,10%,50V,SL,TP,6.5X	
AC1R	2201-000368	C-CERAMIC,DISC;0.22NF,10%,50V,SL,TP,6.5X	
AC1L	2201-000368	C-CERAMIC,DISC;0.22NF,10%,50V,SL,TP,6.5X	
ACE2	2201-000381	C-CERAMIC,DISC;22nF,+80%,50V,-,,8x4mm,-	
AC57L	2201-000532	C-CERAMIC,DISC;4.7NF,10%,50V,Y5P,TP,8X3.	
AC56R	2201-000532	C-CERAMIC,DISC;4.7NF,10%,50V,Y5P,TP,8X3.	
AC56L	2201-000532	C-CERAMIC,DISC;4.7NF,10%,50V,Y5P,TP,8X3.	
AC17R	2201-000532	C-CERAMIC,DISC;4.7NF,10%,50V,Y5P,TP,8X3.	
AC17L	2201-000532	C-CERAMIC,DISC;4.7NF,10%,50V,Y5P,TP,8X3.	
AC16R	2201-000783	C-CERAMIC,DISC;100NF,+80-20%,50V,Y5V,TP,	
AC16L	2201-000783	C-CERAMIC,DISC;100NF,+80-20%,50V,Y5V,TP,	
AC5R	2201-000838	C-CERAMIC,DISC;0.003NF,0.25PF,50V,C0G,TP	
AC5L	2201-000838	C-CERAMIC,DISC;0.003NF,0.25PF,50V,C0G,TP	
AC7	2202-000854	C-CERAMIC,MLC-AXIAL;47nF,30%,50V,Y5R,TP,	
AC15R	2301-000375	C-FILM,PEF;100nF,10%,TP,50V,11x12.5x6.5,	
AC15L	2301-000375	C-FILM,PEF;100nF,10%,TP,50V,11x12.5x6.5,	
AC40	2401-000970	C-AL;22uF,20%,50V,WT,TP,5x11,5	
AC4R	2401-001164	C-AL;33uF,20%,16V,GP,TP,5x11mm,5mm	
AC4L	2401-001164	C-AL;33uF,20%,16V,GP,TP,5x11mm,5mm	
AC21	2401-001912	C-AL;1uF,20%,50V,GP,5*11,5mm,TP	
AC6L	2401-001954	C-AL;4.7uF,20%,50V,GP,TP,5x11mm,5mm	
AC3R	2401-001954	C-AL;4.7uF,20%,50V,GP,TP,5x11mm,5mm	
AC23	2401-002180	C-AL;2.2uF,20%,50V,GP,TP,5x11mm,5mm	
AC22	2401-002180	C-AL;2.2uF,20%,50V,GP,TP,5x11mm,5mm	
	AH92-01814A	**ASSY PCB-POWER/JOG;MAX-KD100,POWER/JOG**	
JVR1	3406-001054	SWITCH-ROTARY;5V DC,0.5mA,-,7.5mm	
JCW1	3708-000452	CONNECTOR-FPC/FFC/PIC;19P,1.25mm,STRAIGH	
JQ4	0501-000341	TR-SMALL SIGNAL;KSC1623-L,NPN,200mW,SOT-	
JQ5	0501-000341	TR-SMALL SIGNAL;KSC1623-L,NPN,200mW,SOT-	
JQ6	0501-000341	TR-SMALL SIGNAL;KSC1623-L,NPN,200mW,SOT-	
JQ7	0501-000341	TR-SMALL SIGNAL;KSC1623-L,NPN,200mW,SOT-	
JQ8	0501-000341	TR-SMALL SIGNAL;KSC1623-L,NPN,200mW,SOT-	
JQ9	0501-000341	TR-SMALL SIGNAL;KSC1623-L,NPN,200mW,SOT-	
JQ1	0501-000341	TR-SMALL SIGNAL;KSC1623-L,NPN,200mW,SOT-	
JQ10	0501-000341	TR-SMALL SIGNAL;KSC1623-L,NPN,200mW,SOT-	
JQ11	0501-000341	TR-SMALL SIGNAL;KSC1623-L,NPN,200mW,SOT-	
JQ3	0501-000341	TR-SMALL SIGNAL;KSC1623-L,NPN,200mW,SOT-	
JQ2	0501-000341	TR-SMALL SIGNAL;KSC1623-L,NPN,200mW,SOT-	

Location no	Code no.	Description Specification	Remarks
JQ12	0501-000341	TR-SMALL SIGNAL;KSC1623-L,NPN,200mW,SOT-	
JLD4	0601-001074	LED;ROUND,GRN,3mm,569nm	
JLD5	0601-001074	LED;ROUND,GRN,3mm,569nm	
JLD6	0601-001074	LED;ROUND,GRN,3mm,569nm	
JLD7	0601-001074	LED;ROUND,GRN,3mm,569nm	
JLD8	0601-001074	LED;ROUND,GRN,3mm,569nm	
JLD9	0601-001074	LED;ROUND,GRN,3mm,569nm	
JLD1	0601-001074	LED;ROUND,GRN,3mm,569nm	
JLD10	0601-001074	LED;ROUND,GRN,3mm,569nm	
JLD11	0601-001074	LED;ROUND,GRN,3mm,569nm	
JLD3	0601-001074	LED;ROUND,GRN,3mm,569nm	
JLD2	0601-001074	LED;ROUND,GRN,3mm,569nm	
JLD12	0601-001074	LED;ROUND,GRN,3mm,569nm	
JJW33	2007-000029	R-CHIP;0ohm,5%,1/8W,TP,2012	
JJW34	2007-000029	R-CHIP;0ohm,5%,1/8W,TP,2012	
JJW35	2007-000029	R-CHIP;0ohm,5%,1/8W,TP,2012	
JJW36	2007-000029	R-CHIP;0ohm,5%,1/8W,TP,2012	
JJW39	2007-000029	R-CHIP;0ohm,5%,1/8W,TP,2012	
JJW29	2007-000029	R-CHIP;0ohm,5%,1/8W,TP,2012	
JJW3	2007-000029	R-CHIP;0ohm,5%,1/8W,TP,2012	
JJW30	2007-000029	R-CHIP;0ohm,5%,1/8W,TP,2012	
JJW31	2007-000029	R-CHIP;0ohm,5%,1/8W,TP,2012	
JJW32	2007-000029	R-CHIP;0ohm,5%,1/8W,TP,2012	
JJW4	2007-000029	R-CHIP;0ohm,5%,1/8W,TP,2012	
JJW5	2007-000029	R-CHIP;0ohm,5%,1/8W,TP,2012	
JJW6	2007-000029	R-CHIP;0ohm,5%,1/8W,TP,2012	
JJW7	2007-000029	R-CHIP;0ohm,5%,1/8W,TP,2012	
JJW8	2007-000029	R-CHIP;0ohm,5%,1/8W,TP,2012	
JJW9	2007-000029	R-CHIP;0ohm,5%,1/8W,TP,2012	
JJW40	2007-000029	R-CHIP;0ohm,5%,1/8W,TP,2012	
JJW41	2007-000029	R-CHIP;0ohm,5%,1/8W,TP,2012	
JJW42	2007-000029	R-CHIP;0ohm,5%,1/8W,TP,2012	
JJW43	2007-000029	R-CHIP;0ohm,5%,1/8W,TP,2012	
JJW44	2007-000029	R-CHIP;0ohm,5%,1/8W,TP,2012	
JJW13	2007-000029	R-CHIP;0ohm,5%,1/8W,TP,2012	
JJW14	2007-000029	R-CHIP;0ohm,5%,1/8W,TP,2012	
JJW15	2007-000029	R-CHIP;0ohm,5%,1/8W,TP,2012	
JJW16	2007-000029	R-CHIP;0ohm,5%,1/8W,TP,2012	
JJW17	2007-000029	R-CHIP;0ohm,5%,1/8W,TP,2012	
JJW1	2007-000029	R-CHIP;0ohm,5%,1/8W,TP,2012	
JJW10	2007-000029	R-CHIP;0ohm,5%,1/8W,TP,2012	
JJW11	2007-000029	R-CHIP;0ohm,5%,1/8W,TP,2012	
JJW11	2007-000029	R-CHIP;0ohm,5%,1/8W,TP,2012	
JJW12	2007-000029	R-CHIP;0ohm,5%,1/8W,TP,2012	
JJW18	2007-000029	R-CHIP;0ohm,5%,1/8W,TP,2012	
JJW24	2007-000029	R-CHIP;0ohm,5%,1/8W,TP,2012	
JJW25	2007-000029	R-CHIP;0ohm,5%,1/8W,TP,2012	
JJW26	2007-000029	R-CHIP;0ohm,5%,1/8W,TP,2012	
JJW27	2007-000029	R-CHIP;0ohm,5%,1/8W,TP,2012	
JJW28	2007-000029	R-CHIP;0ohm,5%,1/8W,TP,2012	
JJW19	2007-000029	R-CHIP;0ohm,5%,1/8W,TP,2012	
JJW2	2007-000029	R-CHIP;0ohm,5%,1/8W,TP,2012	
JJW20	2007-000029	R-CHIP;0ohm,5%,1/8W,TP,2012	
JJW21	2007-000029	R-CHIP;0ohm,5%,1/8W,TP,2012	
JJW23	2007-000029	R-CHIP;0ohm,5%,1/8W,TP,2012	
JR8	2007-000221	R-CHIP;1.2Kohm,5%,1/8W,TP,2012	
JR9	2007-000241	R-CHIP;1.5Kohm,5%,1/8W,TP,2012	
JR13	2007-000267	R-CHIP;1.8Kohm,5%,1/8W,TP,2012	
JR32	2007-000267	R-CHIP;1.8Kohm,5%,1/8W,TP,2012	
JR27	2007-000300	R-CHIP;10Kohm,5%,1/8W,TP,2012	
JR36	2007-000468	R-CHIP;1Kohm,5%,1/8W,TP,2012	
JR37	2007-000468	R-CHIP;1Kohm,5%,1/8W,TP,2012	
JR38	2007-000468	R-CHIP;1Kohm,5%,1/8W,TP,2012	
JR6	2007-000468	R-CHIP;1Kohm,5%,1/8W,TP,2012	
JR7	2007-000468	R-CHIP;1Kohm,5%,1/8W,TP,2012	
JR8	2007-000468	R-CHIP;1Kohm,5%,1/8W,TP,2012	
JR25	2007-000468	R-CHIP;1Kohm,5%,1/8W,TP,2012	
JR1	2007-000468	R-CHIP;1Kohm,5%,1/8W,TP,2012	
JR11	2007-000468	R-CHIP;1Kohm,5%,1/8W,TP,2012	
JR16	2007-000468	R-CHIP;1Kohm,5%,1/8W,TP,2012	
JR19	2007-000468	R-CHIP;1Kohm,5%,1/8W,TP,2012	
JR2	2007-000468	R-CHIP;1Kohm,5%,1/8W,TP,2012	
JR24	2007-000468	R-CHIP;1Kohm,5%,1/8W,TP,2012	
JR34	2007-000493	R-CHIP;2.2Kohm,5%,1/8W,TP,2012	
JR15	2007-000493	R-CHIP;2.2Kohm,5%,1/8W,TP,2012	
JR26	2007-000572	R-CHIP;220ohm,5%,1/8W,TP,2012	
JR28	2007-000572	R-CHIP;220ohm,5%,1/8W,TP,2012	
JR3	2007-000572	R-CHIP;220ohm,5%,1/8W,TP,2012	
JR33	2007-000572	R-CHIP;220ohm,5%,1/8W,TP,2012	
JR35	2007-000572	R-CHIP;220ohm,5%,1/8W,TP,2012	
JR5	2007-000572	R-CHIP;220ohm,5%,1/8W,TP,2012	
JR10	2007-000572	R-CHIP;220ohm,5%,1/8W,TP,2012	
JR12	2007-000572	R-CHIP;220ohm,5%,1/8W,TP,2012	
JR14	2007-000572	R-CHIP;220ohm,5%,1/8W,TP,2012	
JR18	2007-000572	R-CHIP;220ohm,5%,1/8W,TP,2012	
JR20	2007-000572	R-CHIP;220ohm,5%,1/8W,TP,2012	
JR22	2007-000572	R-CHIP;220ohm,5%,1/8W,TP,2012	
JR30	2007-000586	R-CHIP;22Kohm,5%,1/8W,TP,2012	
JR17	2007-000686	R-CHIP;3.3Kohm,5%,1/8W,TP,2012	
JR21	2007-000872	R-CHIP;4.7Kohm,5%,1/8W,TP,2012	
JR31	2007-001039	R-CHIP;56Kohm,5%,1/8W,TP,2012	
JR23	2007-001071	R-CHIP;6.8Kohm,5%,1/8W,TP,2012	
JR4	2007-001198	R-CHIP;820ohm,1%,1/8W,TP,2012	

Location no	Code no.	Description	Specification	Remarks
JC2	2203-001537	C-CERAMIC,CHIP;1nF,10%,50V,X7R,TP,2012		
JC1	2203-001537	C-CERAMIC,CHIP;1nF,10%,50V,X7R,TP,2012		
JSW3	3404-000165	SWITCH-TACT;12V,50mA,160gf,6x6mm,SPST		
JSW4	3404-000165	SWITCH-TACT;12V,50mA,160gf,6x6mm,SPST		
JSW5	3404-000165	SWITCH-TACT;12V,50mA,160gf,6x6mm,SPST		
JSW6	3404-000165	SWITCH-TACT;12V,50mA,160gf,6x6mm,SPST		
JSW7	3404-000165	SWITCH-TACT;12V,50mA,160gf,6x6mm,SPST		
JSW8	3404-000165	SWITCH-TACT;12V,50mA,160gf,6x6mm,SPST		
JSW9	3404-000165	SWITCH-TACT;12V,50mA,160gf,6x6mm,SPST		
JSW2	3404-000165	SWITCH-TACT;12V,50mA,160gf,6x6mm,SPST		
JSW1	3404-000165	SWITCH-TACT;12V,50mA,160gf,6x6mm,SPST		
JSW10	3404-000165	SWITCH-TACT;12V,50mA,160gf,6x6mm,SPST		
JSW11	3404-000165	SWITCH-TACT;12V,50mA,160gf,6x6mm,SPST		
JSW12	3404-000165	SWITCH-TACT;12V,50mA,160gf,6x6mm,SPST		
JSW13	3404-000165	SWITCH-TACT;12V,50mA,160gf,6x6mm,SPST		
JSW14	3404-000165	SWITCH-TACT;12V,50mA,160gf,6x6mm,SPST		
JSW15	3404-000165	SWITCH-TACT;12V,50mA,160gf,6x6mm,SPST		
	AH92-01848A	**ASSY PCB-POWER;MAX-KD100,POWER**		
PD2	0402-000157	DIODE-RECTIFIER;1N5402,200V,3A,DO-201AD,		
PD3	0402-000157	DIODE-RECTIFIER;1N5402,200V,3A,DO-201AD,		
PD1	0402-001258	DIODE-BRIDGE;GBU606,600V,6A,SIP-4,BK		
PQ5	0502-000303	TR-POWER;KSD882,NPN,1W,TO-126,TP,160-32		
PIC5	1201-000191	IC-OP AMP;4558,DIP,8P,300MIL,DUAL,20V/mV		
PIC2	1203-001006	IC-VOLTAGE REGULATOR;78R05,TO-220F,4P;-,		
PIC3	1203-001586	IC-VOLTAGE REGULATOR;278R33,TO-220F,4P,-		
PIC4	1203-001589	IC-POSI.FIXED REG.;278R05,TO-220F,4P;-,P		
PR10	2003-000710	R-METAL OXIDE(S);47ohm,5%,2W,AA,TP,4x12m		
PR26	2003-000710	R-METAL OXIDE(S);47ohm,5%,2W,AA,TP,4x12m		
PR72	2003-000710	R-METAL OXIDE(S);47ohm,5%,2W,AA,TP,4x12m		
PC5	2401-001633	C-AL;6800uF,20%,25V,GP,BK,18x35.5,7		
PC20	2401-001633	C-AL;6800uF,20%,25V,GP,BK,18x35.5,7		
PC19	2401-001882	C-AL;1000uF,20%,16V,LZ,-,10x20,-		
PC6	2401-001923	C-AL;2200UF,20%,16V,GP,BK,12.5X16,5		
LFU2	3601-000282	FUSE;250V,4A,TIME-LAG,GLASS,5.2x20m		
PCW3	3711-000629	CONNECTOR-HEADER;BOX,11P,2R,2.5MM,STRAIG		
PCW1	3711-000820	CONNECTOR-HEADER;BOX,2P,1R,2.5MM,STRAIGH		
PCW7	3711-000820	CONNECTOR-HEADER;BOX,2P,1R,2.5MM,STRAIGH		
PCW5	3711-000827	CONNECTOR-HEADER;BOX,2P,1R,2mm,STRAIGHT,		
PCW4	3711-003107	CONNECTOR-HEADER;BOX,3P,1R,2.5mm,STRAIGH		
PCW6	AH39-00060A	LEAD CONNECTOR ASSY;-,51015-08,51004-08,		
PCW2	AH39-00096B	LEAD CONNECTOR ASSY;RXD-DV9,#1007,28,AWG		
PD5	0401-000101	DIODE-SWITCHING;1N4148,100V,200mA,DO-35,		
PD4	0401-000101	DIODE-SWITCHING;1N4148,100V,200mA,DO-35,		
PC10	0402-000127	DIODE-RECTIFIER;1N4002,100V,1A,DO-41,TP		
PQ8	0501-000010	TR-SMALL SIGNAL;KSC1008,NPN,800mW,TO-92,		
PQ7	0501-000010	TR-SMALL SIGNAL;KSC1008,NPN,800mW,TO-92,		
PQ6	0501-000303	TR-SMALL SIGNAL;KSA733,PNP,250mW,TO-92,T		
PQ4	0501-000398	TR-SMALL SIGNAL;KSC945,NPN,250mW,TO-92,T		
PQ2	0501-000398	TR-SMALL SIGNAL;KSC945,NPN,250mW,TO-92,T		
PQ3	0501-000610	TR-SMALL SIGNAL;KSA928A-Y,PNP,1W,TO-92L,		
PQ1	0501-000610	TR-SMALL SIGNAL;KSA928A-Y,PNP,1W,TO-92L,		
PR17	2001-000003	R-CARBON;330ohm,5%,1/8W,AA,TP,1.8x3.2mm		
PR11	2001-000010	R-CARBON;68Kohm,5%,1/8W,AA,TP,1.8x3.2mm		
PR8	2001-000273	R-CARBON;100Kohm,5%,1/8W,AA,TP,1.8x3.2m		
PR14	2001-000273	R-CARBON;100Kohm,5%,1/8W,AA,TP,1.8x3.2m		
PR12	2001-000273	R-CARBON;100Kohm,5%,1/8W,AA,TP,1.8x3.2m		
PR22	2001-000290	R-CARBON;10Kohm,5%,1/8W,AA,TP,1.8x3.2mm		
PR19	2001-000290	R-CARBON;10Kohm,5%,1/8W,AA,TP,1.8x3.2mm		
PR18	2001-000290	R-CARBON;10Kohm,5%,1/8W,AA,TP,1.8x3.2mm		
PR15	2001-000290	R-CARBON;10Kohm,5%,1/8W,AA,TP,1.8x3.2mm		
PR13	2001-000290	R-CARBON;10Kohm,5%,1/8W,AA,TP,1.8x3.2mm		
PR3R	2001-000331	R-CARBON;12Kohm,5%,1/8W,AA,TP,1.8x3.2mm		
PR3L	2001-000331	R-CARBON;12Kohm,5%,1/8W,AA,TP,1.8x3.2mm		
PR7	2001-000429	R-CARBON;1Kohm,5%,1/8W,AA,TP,1.8x3.2mm		
PR21	2001-000435	R-CARBON;1Mohm,5%,1/8W,AA,TP,1.8x3.2mm		
RR1R	2001-000449	R-CARBON;2.2Kohm,5%,1/8W,AA,TP,1.8x3.2m		
PR1L	2001-000449	R-CARBON;2.2Kohm,5%,1/8W,AA,TP,1.8x3.2m		
PR24	2001-000613	R-CARBON;3.9Kohm,5%,1/8W,AA,TP,1.8x3.2m		
PR23	2001-000613	R-CARBON;3.9Kohm,5%,1/8W,AA,TP,1.8x3.2m		
PR6	2001-000786	R-CARBON;47Kohm,5%,1/8W,AA,TP,1.8x3.2mm		
PR5	2001-000786	R-CARBON;47Kohm,5%,1/8W,AA,TP,1.8x3.2mm		
PR2R	2001-000786	R-CARBON;47Kohm,5%,1/8W,AA,TP,1.8x3.2mm		
PR2L	2001-000786	R-CARBON;47Kohm,5%,1/8W,AA,TP,1.8x3.2mm		
PR20	2001-000802	R-CARBON;5.6Kohm,5%,1/8W,AA,TP,1.8x3.2m		
PR16	2001-000869	R-CARBON;56ohm,5%,1/8W,AA,TP,1.8x3.2mm		
PR9	2001-000977	R-CARBON;8.2KOHM,5%,1/8W,AA,TP,1.8x3.2m		
PR4R	2001-000977	R-CARBON;8.2KOHM,5%,1/8W,AA,TP,1.8x3.2m		
PR4L	2001-000977	R-CARBON;8.2KOHM,5%,1/8W,AA,TP,1.8x3.2m		
GR52	2001-001144	R-CARBON(S);4.7Kohm,5%,1/2W,AA,TP,2.4x6.		
	2201-000532	C-CERAMIC,DISC;4.7NF,10%,50V,Y5P,TP,8X3.		
PC2L	2202-000781	C-CERAMIC,MLC-AXIAL;100pF,10%,50V,Y5P,TP		
PC2R	2202-000781	C-CERAMIC,MLC-AXIAL;100pF,10%,50V,Y5P,TP		
PC8	2401-000240	C-AL;100uF,20%,10V,GP,TP,5x11,5		
PC11	2401-000240	C-AL;100uF,20%,10V,GP,TP,5x11,5		
PC14	2401-001364	C-AL;470uF,20%,16V,GP,TP,10x12.5,5		
PC18	2401-001538	C-AL;47uF,20%,25V,GP,TP,5x11mm,5mm		
PC17	2401-001538	C-AL;47uF,20%,25V,GP,TP,5x11mm,5mm		
PC12	2401-001893	C-AL;100uF,20%,16V,GP,6*7,5MM,TP		
PC3R	2401-001954	C-AL;4.7uF,20%,50V,GP,TP,5x11mm,5mm		
PC3L	2401-001954	C-AL;4.7uF,20%,50V,GP,TP,5x11mm,5mm		
PC1R	2401-001954	C-AL;4.7uF,20%,50V,GP,TP,5x11mm,5mm		
PC1L	2401-001954	C-AL;4.7uF,20%,50V,GP,TP,5x11mm,5mm		

Location no	Code no.	Description	Specification	Remarks
PC15	2401-001975	C-AL;47uF,20%,16V,GP,TP,5x11mm,5mm		
PC16	2401-001975	C-AL;47uF,20%,16V,GP,TP,5x11mm,5mm		
PL1	2701-000116	INDUCTOR-AXIAL;10uH,10%,4.2x9.8mm		
PFU1*2	3602-000147	FUSE-CLIP;250V,7.5A,30mohm		

***** MAX-KD110 Parts List *****

	3809-000171	CABLE-FLAT;30V,80C,200mm,16P,1.25mm,UL28		
	3809-001185	CABLE-FLAT;30V,80C,120MM,16P,1.25MM,UL28		
	3809-001222	CABLE-FLAT;30V,80C,50mm,11P,1.25mm,UL289		
	3809-001332	CABLE-FLAT;30V,80C,140MM,16P,1.25MM,UL28		
	3809-001416	CABLE-FLAT;30V,80C,150MM,19P,1.25MM,UL28		
	3809-001450	CABLE-FLAT;30V,80C,150MM,23P,1.25MM,UL28		
	6801-001066	CARD-REGISTRATION;RUSSIA,CIS(RUSSIA),RUS		
	AH26-00238A	TRANS POWER;-,MAX-KD110,-,0,220V,##40/##		
	AH39-00257F	POWER CORD;MAX980,-,CP2,250V,2.5A,1830MM		
	AH39-00320C	CBF COAXIAL CABLE;MAX-L68,110REC,-,1007#		
	AH39-40001T	CABLE-RCA-VIDEO CABLE,BLK,2000;DP,1P-1P,		
	AH39-50001X	WIRE HARNESS;RING,1007#24,200MM,BLK		
	AH40-00009A	TUNER-PACK ASSY;KST-MB112LS1-30,FM/MW/LW		
	AH42-20001P	ANT LOOP;-,KS971120-01,18.5UH##10%,-		
	AH46-00020A	DISC-KARAOKE;-,-,DVD,MAX-KD100		
	AH59-01049A	**REMOCON-ASSY;MAX-WB650,-,-,-,62KEY,-,-,-**		
	AH59-01198A	**MICROPHONE;-,M-85,-,-,-,-,-,-,-,-,MIC FOR**		
	AH59-01074G	**SPEAKER SYSTEM;PSKD110E,-,-,-,-,-,-,XFO,**		
	AH59-01162A	**DECK;-,MAX-KD100,-,-,-,-,-,-,-**		
DCN5	3711-003379	CONNECTOR-HEADER;NOWALL,3P,1R,2.5mm,STRA		
	AH92-01831A	**ASSY PCB;MAX-KD100,-**		
RZD1	0403-000352	DIODE-ZENER;UZ4.7BM,4.7V,4.4-5.0V,500mW,		
	0403-000357	DIODE-ZENER;UZ5.6BM,5.6V,5.4-5.8V,500mW,		
DIC2	1003-001418	IC-MOTOR DRIVER;FAN8082,DIP,8P,-,-,1MA,S		
DIC1	1003-001418	IC-MOTOR DRIVER;FAN8082,DIP,8P,-,-,1MA,S		
DXT1	2801-000261	CRYSTAL-UNIT;33.8688MHz,50ppm,28-AAA,12p		
ZX71	2801-003554	CRYSTAL-UNIT;27MHz,10ppm,28-AAM,12pF,40o		
AX1	2801-003716	CRYSTAL-UNIT;9.6MHz,50ppm,28-AAM,20pF,70		
UX1	2801-004256	CRYSTAL-UNIT;33MHZ,30PPM,28-AAE,12 PF,80		OLD PART
UX1	2801-004306	CRYSTAL-UNIT;40MHZ,20PPM,28-AAE,20 PF,80		NEW PART(MP3)
DCN3	3708-000307	CONNECTOR-FPC/FFC/PIC;7P,1.25mm,ANGLE,SN		
ACN21	3708-001195	CONNECTOR-FPC/FFC/PIC;27P,1.25mm,STRAIGH		
RCN1	3708-001464	CONNECTOR-FPC/FFC/PIC;24P,1mm,STRAIGHT,S		
PCN1	3711-000629	CONNECTOR-HEADER;BOX,11P,2R,2.5MM,STRAIG		
VCN2	3711-000827	CONNECTOR-HEADER;BOX,2P,1R,2mm,STRAIGHT,		
TCN2	3711-000907	CONNECTOR-HEADER;BOX,3P,1R,2mm,STRAIGHT,		
ACN22	3711-000907	CONNECTOR-HEADER;BOX,3P,1R,2mm,STRAIGHT,		
DCN4	AH39-00367A	LEAD CONNECTOR ASSY;6P,100MM,#1007,-,6P,		
	AH39-50001M	WIRE HARNESS;RING,1007#24,350MM,BLK		
RD1	0407-000116	DIODE-ARRAY;DAP202K,80V,100mA,CK2-3,SOT-		
DD1	0407-000116	DIODE-ARRAY;DAP202K,80V,100mA,CK2-3,SOT-		
TQ2	0501-000314	TR-SMALL SIGNAL;KSA812,PNP,150mW,SOT-23,		
VQ1	0501-000314	TR-SMALL SIGNAL;KSA812,PNP,150mW,SOT-23,		
TQ1	0501-000341	TR-SMALL SIGNAL;KSC1623-L,NPN,200mW,SOT-		
AQ28	0501-000341	TR-SMALL SIGNAL;KSC1623-L,NPN,200mW,SOT-		
AQ27	0501-000341	TR-SMALL SIGNAL;KSC1623-L,NPN,200mW,SOT-		
RQ2	0501-000632	TR-SMALL SIGNAL;2SB1197K,PNP,200mW,SOT-2		
RQ1	0501-000632	TR-SMALL SIGNAL;2SB1197K,PNP,200mW,SOT-2		
AQ25	0504-000152	TR-DIGITAL;KSR2101,PNP,200mW,4.7K/4.7K,S		
TIC2	0801-000008	IC-CMOS LOGIC;74HC245,TRANSCEIVER,SOP,20		
TIC1	0801-000008	IC-CMOS LOGIC;74HC245,TRANSCEIVER,SOP,20		
AIC5	0801-000475	IC-CMOS LOGIC;74HCT157,MUTIPLEXER,SOP,16		
AIC25	0801-000475	IC-CMOS LOGIC;74HCT157,MUTIPLEXER,SOP,16		
FIC3	0801-000508	IC-CMOS LOGIC;74HCT374,D FLIP-FLOP,SOP,2		
FIC6	0801-001042	IC-CMOS LOGIC;74HC157,MULTIPLEXER,SOP,16		
FIC5	0801-001042	IC-CMOS LOGIC;74HC157,MULTIPLEXER,SOP,16		
UIC5	0801-002770	IC-CMOS LOGIC;MC74VHC1GU04,UNBUFFERED IN		
UIC4	0803-000321	IC-TTL;74LS175,D FLIP-FLOP,SOP,16P,15		
TIC3	0803-000898	IC-TTL;74F244,BUFFER/DRIVERS,SOP,20,3		
UIC2	0803-001040	IC-TTL;74LS14,SCHMITT INVERTER,SOP,14		
UIC1	0903-001337	IC-MICROCONTROLLER;AM186EM,16BIT,PQFP,10		OLD PART
UIC1	0903-001331	IC-MICROCONTROLLER;TG2000CMD,16BIT,PQFP,10		NEW PART(MP3)
AIC14	1002-001188	IC-D/A CONVERTER;PCM1716,24BIT,SSOP,28P,		
DIC3	1003-001450	IC-MOTOR DRIVER;BA5954FM,SOP,28P,300MIL,		
SIC2	1105-001300	IC-DRAM;224162,256Kx16Bit,SOJ,40P,400M		
FIC8	1105-001300	IC-DRAM;224162,256Kx16Bit,SOJ,40P,400M		
FIC7	1105-001300	IC-DRAM;224162,256Kx16Bit,SOJ,40P,400M		
FIC1	1105-001375	IC-DRAM;-,4X1MX16BIT,TSOP(II),54P,400M		
MIC2	1107-001203	IC-FLASH MEMORY;49F512,64Kx8Bit,PLCC,32P		
UIC3	1107-001444	IC-FLASH MEMORY;M29F800DT,1024X8BIT,TSOP		
AIC11	1201-000461	IC-OP AMP;4558,SOP,8P,150MIL,DUAL,20V/mV		
RIC1	1201-001790	IC-RF AMP;SP3721A,TQFP,64P,10MIL,SINGLE,		
RIC2	1201-001842	IC-OP AMP;TL3472CD,SO,TP,8P,-,DUAL,-,PAL		
MIC1	1203-001369	IC-VOL. DETECTOR;61AN1902,SOT-23,3P,63MI		
DIC4	1203-002390	IC-POSI.FIXED REG.;NJM7805,TO-252,3P,-,P		
ZIC2	1203-002935	IC-POSI.ADJUST REG.;AIC1117ACE,TO-252,3P		
ZIC3	1204-001919	IC-DECODER;ZIVA4.1 B0,QFP,208P,28X28MM,P		
SIC1	1204-001936	IC-DECODER;M5705,LQFP,176P,24X24MM,PALST		
AIC13	1209-001485	IC-SYNTHESIZER;SAM9773,TQFP,80P,14X14MM,		
PL6	2007-000029	R-CHIP;0ohm,5%,1/8W,TP,2012		

Location no	Code no.	Description Specification	Remarks
PL5	2007-000029	R-CHIP;0ohm,5%,1/8W,TP,2012	
DL4	2007-000029	R-CHIP;0ohm,5%,1/8W,TP,2012	
RR7	2007-000070	R-CHIP;0ohm,5%,1/10W,TP,1608	
RR6	2007-000070	R-CHIP;0ohm,5%,1/10W,TP,1608	
RR27	2007-000070	R-CHIP;0ohm,5%,1/10W,TP,1608	
RR21	2007-000070	R-CHIP;0ohm,5%,1/10W,TP,1608	
SR13	2007-000070	R-CHIP;0ohm,5%,1/10W,TP,1608	
SR19	2007-000070	R-CHIP;0ohm,5%,1/10W,TP,1608	
UR23	2007-000070	R-CHIP;0ohm,5%,1/10W,TP,1608	
UR42	2007-000070	R-CHIP;0ohm,5%,1/10W,TP,1608	
RR2	2007-000070	R-CHIP;0ohm,5%,1/10W,TP,1608	
DR29	2007-000070	R-CHIP;0ohm,5%,1/10W,TP,1608	
DR43	2007-000070	R-CHIP;0ohm,5%,1/10W,TP,1608	
FR11	2007-000070	R-CHIP;0ohm,5%,1/10W,TP,1608	
FR2	2007-000070	R-CHIP;0ohm,5%,1/10W,TP,1608	
RR11	2007-000070	R-CHIP;0ohm,5%,1/10W,TP,1608	
FR9	2007-000070	R-CHIP;0ohm,5%,1/10W,TP,1608	
FR7	2007-000070	R-CHIP;0ohm,5%,1/10W,TP,1608	
FR5	2007-000070	R-CHIP;0ohm,5%,1/10W,TP,1608	
UR11	2007-000072	R-CHIP;47ohm,5%,1/10W,TP,1608	
FR8	2007-000072	R-CHIP;47ohm,5%,1/10W,TP,1608	
FR6	2007-000072	R-CHIP;47ohm,5%,1/10W,TP,1608	
TR28	2007-000074	R-CHIP;100ohm,5%,1/10W,TP,1608	
AR142	2007-000074	R-CHIP;100ohm,5%,1/10W,TP,1608	
UR36	2007-000075	R-CHIP;220ohm,5%,1/10W,TP,1608	
UR25	2007-000075	R-CHIP;220ohm,5%,1/10W,TP,1608	
UR24	2007-000075	R-CHIP;220ohm,5%,1/10W,TP,1608	
RR32	2007-000075	R-CHIP;220ohm,5%,1/10W,TP,1608	
TR30	2007-000075	R-CHIP;220ohm,5%,1/10W,TP,1608	
UR17	2007-000113	R-CHIP;33ohm,5%,1/10W,TP,1608	OLD PART
UR17	2007-000074	R-CHIP;100ohm,5%,1/10W,TP,1608	NEW PART(MP3)
SR34	2007-000076	R-CHIP;330ohm,5%,1/10W,TP,1608	
SR35	2007-000076	R-CHIP;330ohm,5%,1/10W,TP,1608	
SR36	2007-000076	R-CHIP;330ohm,5%,1/10W,TP,1608	
SR37	2007-000076	R-CHIP;330ohm,5%,1/10W,TP,1608	
SR32	2007-000076	R-CHIP;330ohm,5%,1/10W,TP,1608	
AR101	2007-000076	R-CHIP;330ohm,5%,1/10W,TP,1608	
AR102	2007-000076	R-CHIP;330ohm,5%,1/10W,TP,1608	
AR119	2007-000076	R-CHIP;330ohm,5%,1/10W,TP,1608	
AR120	2007-000076	R-CHIP;330ohm,5%,1/10W,TP,1608	
UR19	2007-000077	R-CHIP;470ohm,5%,1/10W,TP,1608	
MR4	2007-000078	R-CHIP;1Kohm,5%,1/10W,TP,1608	
RR12	2007-000078	R-CHIP;1Kohm,5%,1/10W,TP,1608	
RR3	2007-000078	R-CHIP;1Kohm,5%,1/10W,TP,1608	
SR22	2007-000078	R-CHIP;1Kohm,5%,1/10W,TP,1608	
ZR55	2007-000078	R-CHIP;1Kohm,5%,1/10W,TP,1608	
ZR58	2007-000078	R-CHIP;1Kohm,5%,1/10W,TP,1608	
MR3	2007-000078	R-CHIP;1Kohm,5%,1/10W,TP,1608	
DR14	2007-000078	R-CHIP;1Kohm,5%,1/10W,TP,1608	
DR15	2007-000078	R-CHIP;1Kohm,5%,1/10W,TP,1608	
DR3	2007-000078	R-CHIP;1Kohm,5%,1/10W,TP,1608	
DR6	2007-000078	R-CHIP;1Kohm,5%,1/10W,TP,1608	
DR5	2007-000078	R-CHIP;1Kohm,5%,1/10W,TP,1608	
DR4	2007-000078	R-CHIP;1Kohm,5%,1/10W,TP,1608	
SR9	2007-000082	R-CHIP;3.3Kohm,5%,1/10W,TP,1608	
SR17	2007-000082	R-CHIP;3.3Kohm,5%,1/10W,TP,1608	
SR11	2007-000082	R-CHIP;3.3Kohm,5%,1/10W,TP,1608	
SR10	2007-000082	R-CHIP;3.3Kohm,5%,1/10W,TP,1608	
DR21	2007-000082	R-CHIP;3.3Kohm,5%,1/10W,TP,1608	
UR41	2007-000084	R-CHIP;4.7Kohm,5%,1/10W,TP,1608	
UR20	2007-000084	R-CHIP;4.7Kohm,5%,1/10W,TP,1608	
SR5	2007-000084	R-CHIP;4.7Kohm,5%,1/10W,TP,1608	
ZR1	2007-000084	R-CHIP;4.7Kohm,5%,1/10W,TP,1608	
ZR2	2007-000084	R-CHIP;4.7Kohm,5%,1/10W,TP,1608	
ZR56	2007-000084	R-CHIP;4.7Kohm,5%,1/10W,TP,1608	
ZR57	2007-000084	R-CHIP;4.7Kohm,5%,1/10W,TP,1608	
DR7	2007-000084	R-CHIP;4.7Kohm,5%,1/10W,TP,1608	
FR1	2007-000084	R-CHIP;4.7Kohm,5%,1/10W,TP,1608	
FR3	2007-000084	R-CHIP;4.7Kohm,5%,1/10W,TP,1608	
MR2	2007-000084	R-CHIP;4.7Kohm,5%,1/10W,TP,1608	
MR5	2007-000084	R-CHIP;4.7Kohm,5%,1/10W,TP,1608	
SR12	2007-000084	R-CHIP;4.7Kohm,5%,1/10W,TP,1608	
SR18	2007-000084	R-CHIP;4.7Kohm,5%,1/10W,TP,1608	
RR26	2007-000088	R-CHIP;7.5Kohm,5%,1/10W,TP,1608	
R43	2007-000090	R-CHIP;10Kohm,5%,1/10W,TP,1608	
RR15	2007-000090	R-CHIP;10Kohm,5%,1/10W,TP,1608	
RR16	2007-000090	R-CHIP;10Kohm,5%,1/10W,TP,1608	
SR28	2007-000090	R-CHIP;10Kohm,5%,1/10W,TP,1608	
TR22	2007-000090	R-CHIP;10Kohm,5%,1/10W,TP,1608	
UR22	2007-000090	R-CHIP;10Kohm,5%,1/10W,TP,1608	
UR38	2007-000090	R-CHIP;10Kohm,5%,1/10W,TP,1608	
VR1	2007-000090	R-CHIP;10Kohm,5%,1/10W,TP,1608	
DR26	2007-000090	R-CHIP;10Kohm,5%,1/10W,TP,1608	
AR103	2007-000090	R-CHIP;10Kohm,5%,1/10W,TP,1608	
AR104	2007-000090	R-CHIP;10Kohm,5%,1/10W,TP,1608	
AR107	2007-000090	R-CHIP;10Kohm,5%,1/10W,TP,1608	
AR108	2007-000090	R-CHIP;10Kohm,5%,1/10W,TP,1608	
DR25	2007-000090	R-CHIP;10Kohm,5%,1/10W,TP,1608	
DR20	2007-000090	R-CHIP;10Kohm,5%,1/10W,TP,1608	
AR110	2007-000090	R-CHIP;10Kohm,5%,1/10W,TP,1608	
AR109	2007-000090	R-CHIP;10Kohm,5%,1/10W,TP,1608	
DR19	2007-000091	R-CHIP;12Kohm,5%,1/10W,TP,1608	
SR7	2007-000093	R-CHIP;20Kohm,5%,1/10W,TP,1608	

Location no	Code no.	Description Specification	Remarks
TR2	2007-000094	R-CHIP;22Kohm,5%,1/10W,TP,1608	
TR3	2007-000094	R-CHIP;22Kohm,5%,1/10W,TP,1608	
TR4	2007-000094	R-CHIP;22Kohm,5%,1/10W,TP,1608	
TR8	2007-000094	R-CHIP;22Kohm,5%,1/10W,TP,1608	
TR9	2007-000094	R-CHIP;22Kohm,5%,1/10W,TP,1608	
TR12	2007-000094	R-CHIP;22Kohm,5%,1/10W,TP,1608	
AR131	2007-000094	R-CHIP;22Kohm,5%,1/10W,TP,1608	
MR1	2007-000094	R-CHIP;22Kohm,5%,1/10W,TP,1608	
TR1	2007-000094	R-CHIP;22Kohm,5%,1/10W,TP,1608	
TR10	2007-000094	R-CHIP;22Kohm,5%,1/10W,TP,1608	
TR11	2007-000094	R-CHIP;22Kohm,5%,1/10W,TP,1608	
SR14	2007-000097	R-CHIP;47Kohm,5%,1/10W,TP,1608	
SR27	2007-000097	R-CHIP;47Kohm,5%,1/10W,TP,1608	
UR10	2007-000097	R-CHIP;47Kohm,5%,1/10W,TP,1608	
UR9	2007-000097	R-CHIP;47Kohm,5%,1/10W,TP,1608	
DR28	2007-000097	R-CHIP;47Kohm,5%,1/10W,TP,1608	
DR17	2007-000097	R-CHIP;47Kohm,5%,1/10W,TP,1608	
DR13	2007-000097	R-CHIP;47Kohm,5%,1/10W,TP,1608	
DR12	2007-000097	R-CHIP;47Kohm,5%,1/10W,TP,1608	
DR11	2007-000097	R-CHIP;47Kohm,5%,1/10W,TP,1608	
RR25	2007-000098	R-CHIP;56Kohm,5%,1/10W,TP,1608	
RR28	2007-000107	R-CHIP;470Kohm,5%,1/10W,TP,1608	
ZR71	2007-000109	R-CHIP;1Mohm,5%,1/10W,TP,1608	
UR18	2007-000109	R-CHIP;1Mohm,5%,1/10W,TP,1608	
AR141	2007-000109	R-CHIP;1Mohm,5%,1/10W,TP,1608	
VR28	2007-000113	R-CHIP;33ohm,5%,1/10W,TP,1608	
VR30	2007-000113	R-CHIP;33ohm,5%,1/10W,TP,1608	
VR32	2007-000113	R-CHIP;33ohm,5%,1/10W,TP,1608	
VR34	2007-000113	R-CHIP;33ohm,5%,1/10W,TP,1608	
UR8	2007-000113	R-CHIP;33ohm,5%,1/10W,TP,1608	
UR7	2007-000113	R-CHIP;33ohm,5%,1/10W,TP,1608	
UR6	2007-000113	R-CHIP;33ohm,5%,1/10W,TP,1608	
UR5	2007-000113	R-CHIP;33ohm,5%,1/10W,TP,1608	
ZR51	2007-000113	R-CHIP;33ohm,5%,1/10W,TP,1608	
ZR50	2007-000113	R-CHIP;33ohm,5%,1/10W,TP,1608	
ZR45	2007-000113	R-CHIP;33ohm,5%,1/10W,TP,1608	
ZR44	2007-000113	R-CHIP;33ohm,5%,1/10W,TP,1608	
ZR43	2007-000113	R-CHIP;33ohm,5%,1/10W,TP,1608	
ZR42	2007-000113	R-CHIP;33ohm,5%,1/10W,TP,1608	
ZR38	2007-000113	R-CHIP;33ohm,5%,1/10W,TP,1608	
VR35	2007-000113	R-CHIP;33ohm,5%,1/10W,TP,1608	
UR40	2007-000113	R-CHIP;33ohm,5%,1/10W,TP,1608	
SR15	2007-000113	R-CHIP;33ohm,5%,1/10W,TP,1608	
RR9	2007-000113	R-CHIP;33ohm,5%,1/10W,TP,1608	
RR8	2007-000113	R-CHIP;33ohm,5%,1/10W,TP,1608	
RR5	2007-000113	R-CHIP;33ohm,5%,1/10W,TP,1608	
FR4	2007-000113	R-CHIP;33ohm,5%,1/10W,TP,1608	
FR10	2007-000113	R-CHIP;33ohm,5%,1/10W,TP,1608	
DR18	2007-000113	R-CHIP;33ohm,5%,1/10W,TP,1608	
AR143	2007-000113	R-CHIP;33ohm,5%,1/10W,TP,1608	
UR4	2007-000113	R-CHIP;33ohm,5%,1/10W,TP,1608	
UR39	2007-000113	R-CHIP;33ohm,5%,1/10W,TP,1608	
UR30	2007-000113	R-CHIP;33ohm,5%,1/10W,TP,1608	
UR3	2007-000113	R-CHIP;33ohm,5%,1/10W,TP,1608	
UR1	2007-000113	R-CHIP;33ohm,5%,1/10W,TP,1608	
UR12	2007-000113	R-CHIP;33ohm,5%,1/10W,TP,1608	
UR2	2007-000113	R-CHIP;33ohm,5%,1/10W,TP,1608	
UR21	2007-000113	R-CHIP;33ohm,5%,1/10W,TP,1608	
DR9	2007-000118	R-CHIP;390ohm,5%,1/10W,TP,1608	
DR8	2007-000118	R-CHIP;390ohm,5%,1/10W,TP,1608	
DR10	2007-000118	R-CHIP;390ohm,5%,1/10W,TP,1608	
RR33	2007-000119	R-CHIP;560ohm,5%,1/10W,TP,1608	
ZR54	2007-000122	R-CHIP;1.2Kohm,5%,1/10W,TP,1608	
SR1	2007-000122	R-CHIP;1.2Kohm,5%,1/10W,TP,1608	
RR14	2007-000122	R-CHIP;1.2Kohm,5%,1/10W,TP,1608	
RR13	2007-000122	R-CHIP;1.2Kohm,5%,1/10W,TP,1608	
LR2	2007-000124	R-CHIP;2.2Kohm,5%,1/10W,TP,1608	
LR1	2007-000124	R-CHIP;2.2Kohm,5%,1/10W,TP,1608	
SR3	2007-000131	R-CHIP;91Kohm,5%,1/10W,TP,1608	
SR2	2007-000131	R-CHIP;91Kohm,5%,1/10W,TP,1608	
DR16	2007-000134	R-CHIP;33Kohm,5%,1/10W,TP,1608	
DR27	2007-000134	R-CHIP;33Kohm,5%,1/10W,TP,1608	
RR10	2007-000308	R-CHIP;10ohm,5%,1/8W,TP,2012	
RR1	2007-000308	R-CHIP;10ohm,5%,1/8W,TP,2012	
PR1	2007-000308	R-CHIP;10ohm,5%,1/8W,TP,2012	
VR26	2007-000309	R-CHIP;10ohm,5%,1/10W,TP,1608	
SR23	2007-000309	R-CHIP;10ohm,5%,1/10W,TP,1608	
AR92	2007-000309	R-CHIP;10ohm,5%,1/10W,TP,1608	
AR91	2007-000309	R-CHIP;10ohm,5%,1/10W,TP,1608	
VR2	2007-000402	R-CHIP;150ohm,5%,1/10W,TP,1608	
AR132	2007-000417	R-CHIP;15ohm,5%,1/4W,TP,3216	
DR32	2007-000483	R-CHIP;1ohm,5%,1/8W,TP,2012	
DR31	2007-000483	R-CHIP;1ohm,5%,1/8W,TP,2012	
DR24	2007-000483	R-CHIP;1ohm,5%,1/8W,TP,2012	
DR23	2007-000483	R-CHIP;1ohm,5%,1/8W,TP,2012	
ZR60	2007-000608	R-CHIP;240ohm,5%,1/10W,TP,1608	
ZR59	2007-000608	R-CHIP;240ohm,5%,1/10W,TP,1608	
SR21	2007-000962	R-CHIP;5.1Kohm,1%,1/10W,TP,1608	
SR29	2007-000962	R-CHIP;5.1Kohm,1%,1/10W,TP,1608	
SR8	2007-001010	R-CHIP;51Kohm,5%,1/10W,TP,1608	
AR122	2007-001010	R-CHIP;51Kohm,5%,1/10W,TP,1608	
AR121	2007-001010	R-CHIP;51Kohm,5%,1/10W,TP,1608	
UR16	2007-001134	R-CHIP;68ohm,5%,1/10W,TP,1608	

Location no	Code no.	Description	Specification	Remarks
UR28	2007-001134	R-CHIP;68ohm,5%,1/10W,TP,1608		
UR29	2007-001134	R-CHIP;68ohm,5%,1/10W,TP,1608		
UR31	2007-001134	R-CHIP;68ohm,5%,1/10W,TP,1608		
VR3	2007-001134	R-CHIP;68ohm,5%,1/10W,TP,1608		
FR12	2007-001134	R-CHIP;68ohm,5%,1/10W,TP,1608		
FR13	2007-001134	R-CHIP;68ohm,5%,1/10W,TP,1608		
UR13	2007-001134	R-CHIP;68ohm,5%,1/10W,TP,1608		
UR14	2007-001134	R-CHIP;68ohm,5%,1/10W,TP,1608		
UR15	2007-001134	R-CHIP;68ohm,5%,1/10W,TP,1608		
ZR46	2007-001167	R-CHIP;75ohm,5%,1/10W,TP,1608		
RR4	2007-001179	R-CHIP;8.2Kohm,5%,1/10W,TP,1608		
RR30	2007-001179	R-CHIP;8.2Kohm,5%,1/10W,TP,1608		
RN7	2011-000475	R-NETWORK;33OHM,5%,1/16W,L,CHIP,8P,TP,32		
RN8	2011-000475	R-NETWORK;33OHM,5%,1/16W,L,CHIP,8P,TP,32		
RN9	2011-000475	R-NETWORK;33OHM,5%,1/16W,L,CHIP,8P,TP,32		
SN1	2011-000475	R-NETWORK;33OHM,5%,1/16W,L,CHIP,8P,TP,32		
TN3	2011-000475	R-NETWORK;33OHM,5%,1/16W,L,CHIP,8P,TP,32		
TN5	2011-000475	R-NETWORK;33OHM,5%,1/16W,L,CHIP,8P,TP,32		
RN1	2011-000475	R-NETWORK;33OHM,5%,1/16W,L,CHIP,8P,TP,32		
RN2	2011-000475	R-NETWORK;33OHM,5%,1/16W,L,CHIP,8P,TP,32		
RN3	2011-000475	R-NETWORK;33OHM,5%,1/16W,L,CHIP,8P,TP,32		
RN4	2011-000475	R-NETWORK;33OHM,5%,1/16W,L,CHIP,8P,TP,32		
RN5	2011-000475	R-NETWORK;33OHM,5%,1/16W,L,CHIP,8P,TP,32		
RN6	2011-000475	R-NETWORK;33OHM,5%,1/16W,L,CHIP,8P,TP,32		
TN4	2011-000585	R-NETWORK;47OHM,5%,1/16W,L,CHIP,8P,TP		
TN13	2011-000816	R-NETWORK;100OHM,5%,1/16W,L,CHIP,8P,TP		
TN12	2011-000816	R-NETWORK;100OHM,5%,1/16W,L,CHIP,8P,TP		
TN11	2011-000816	R-NETWORK;100OHM,5%,1/16W,L,CHIP,8P,TP		
TN10	2011-000816	R-NETWORK;100OHM,5%,1/16W,L,CHIP,8P,TP		
TN7	2011-001011	R-NETWORK;10KOHM,5%,1/16W,L,CHIP,8P,TP		
TN8	2011-001011	R-NETWORK;10KOHM,5%,1/16W,L,CHIP,8P,TP		
TN9	2011-001011	R-NETWORK;10KOHM,5%,1/16W,L,CHIP,8P,TP		
TN6	2011-001011	R-NETWORK;10KOHM,5%,1/16W,L,CHIP,8P,TP		
TN2	2011-001011	R-NETWORK;10KOHM,5%,1/16W,L,CHIP,8P,TP		
TN1	2011-001011	R-NETWORK;10KOHM,5%,1/16W,L,CHIP,8P,TP		
AC108	2203-000140	C-CERAMIC,CHIP;1.5nF,10%,50V,X7R,TP,1608		
AC107	2203-000140	C-CERAMIC,CHIP;1.5nF,10%,50V,X7R,TP,1608		
AC120	2203-000236	C-CERAMIC,CHIP;0.1NF,5%,50V,C0G,TP,1608		
DC16	2203-000236	C-CERAMIC,CHIP;0.1NF,5%,50V,C0G,TP,1608		
DC9	2203-000236	C-CERAMIC,CHIP;0.1NF,5%,50V,C0G,TP,1608		
RC21	2203-000236	C-CERAMIC,CHIP;0.1NF,5%,50V,C0G,TP,1608		
AC119	2203-000236	C-CERAMIC,CHIP;0.1NF,5%,50V,C0G,TP,1608		
AC105	2203-000236	C-CERAMIC,CHIP;0.1NF,5%,50V,C0G,TP,1608		
AC106	2203-000236	C-CERAMIC,CHIP;0.1NF,5%,50V,C0G,TP,1608		
AC113	2203-000236	C-CERAMIC,CHIP;0.1NF,5%,50V,C0G,TP,1608		
AC114	2203-000236	C-CERAMIC,CHIP;0.1NF,5%,50V,C0G,TP,1608		
DC5	2203-000257	C-CERAMIC,CHIP;10nF,10%,50V,X7R,TP,1608		
AC139	2203-000257	C-CERAMIC,CHIP;10nF,10%,50V,X7R,TP,1608		
TC14	2203-000280	C-CERAMIC,CHIP;0.01NF,0.5PF,50V,C0G,TP,1		
TC15	2203-000280	C-CERAMIC,CHIP;0.01NF,0.5PF,50V,C0G,TP,1		
TC16	2203-000280	C-CERAMIC,CHIP;0.01NF,0.5PF,50V,C0G,TP,1		
VC3	2203-000280	C-CERAMIC,CHIP;0.01NF,0.5PF,50V,C0G,TP,1		
VC5	2203-000280	C-CERAMIC,CHIP;0.01NF,0.5PF,50V,C0G,TP,1		
FC10	2203-000280	C-CERAMIC,CHIP;0.01NF,0.5PF,50V,C0G,TP,1		
FC9	2203-000280	C-CERAMIC,CHIP;0.01NF,0.5PF,50V,C0G,TP,1		
TC11	2203-000280	C-CERAMIC,CHIP;0.01NF,0.5PF,50V,C0G,TP,1		
TC12	2203-000280	C-CERAMIC,CHIP;0.01NF,0.5PF,50V,C0G,TP,1		
TC13	2203-000280	C-CERAMIC,CHIP;0.01NF,0.5PF,50V,C0G,TP,1		
UC3	2203-000384	C-CERAMIC,CHIP;0.015NF,5%,50V,C0G,TP,160		
UC2	2203-000426	C-CERAMIC,CHIP;0.018NF,5%,50V,C0G,TP,160		
UC1	2203-000440	C-CERAMIC,CHIP;1nF,10%,50V,X7R,TP,1608,-		
SC20	2203-000440	C-CERAMIC,CHIP;1nF,10%,50V,X7R,TP,1608,-		
SC19	2203-000440	C-CERAMIC,CHIP;1nF,10%,50V,X7R,TP,1608,-		
SC11	2203-000440	C-CERAMIC,CHIP;1nF,10%,50V,X7R,TP,1608,-		
RC10	2203-000440	C-CERAMIC,CHIP;1nF,10%,50V,X7R,TP,1608,-		
RC22	2203-000440	C-CERAMIC,CHIP;1nF,10%,50V,X7R,TP,1608,-		
RC26	2203-000440	C-CERAMIC,CHIP;1nF,10%,50V,X7R,TP,1608,-		
AC140	2203-000491	C-CERAMIC,CHIP;2.2nF,10%,50V,X7R,TP,1608		
AC142	2203-000626	C-CERAMIC,CHIP;0.022NF,5%,50V,C0G,TP,160		
AC141	2203-000626	C-CERAMIC,CHIP;0.022NF,5%,50V,C0G,TP,160		
AC104	2203-000783	C-CERAMIC,CHIP;0.33NF,5%,50V,C0G,TP,1608		
AC103	2203-000783	C-CERAMIC,CHIP;0.33NF,5%,50V,C0G,TP,1608		
DC10	2203-000888	C-CERAMIC,CHIP;4.7nF,10%,50V,X7R,TP,1608		
SC14	2203-000972	C-CERAMIC,CHIP;47nF,10%,16V,X7R,TP,1608		
SC1	2203-000972	C-CERAMIC,CHIP;47nF,10%,16V,X7R,TP,1608		
RC17	2203-000972	C-CERAMIC,CHIP;47nF,10%,16V,X7R,TP,1608		
SC6	2203-000998	C-CERAMIC,CHIP;0.047NF,5%,50V,C0G,TP,160		
SC28	2203-000998	C-CERAMIC,CHIP;0.047NF,5%,50V,C0G,TP,160		
SC2	2203-001052	C-CERAMIC,CHIP;0.56nF,10%,50V,X7R,TP,160		
RC47	2203-001071	C-CERAMIC,CHIP;0.056NF,5%,50V,C0G,TP,160		
RC46	2203-001071	C-CERAMIC,CHIP;0.056NF,5%,50V,C0G,TP,160		
SC12	2203-001103	C-CERAMIC,CHIP;6.8nF,10%,50V,X7R,TP,1608		
RC19	2203-001126	C-CERAMIC,CHIP;0.68nF,10%,50V,X7R,TP,160		
RC9	2203-001126	C-CERAMIC,CHIP;0.68nF,10%,50V,X7R,TP,160		
VC4	2203-001126	C-CERAMIC,CHIP;0.68nF,10%,50V,X7R,TP,160		
RC18	2203-001126	C-CERAMIC,CHIP;0.68nF,10%,50V,X7R,TP,160		
RC15	2203-001126	C-CERAMIC,CHIP;0.68nF,10%,50V,X7R,TP,160		
RC13	2203-001126	C-CERAMIC,CHIP;0.68nF,10%,50V,X7R,TP,160		
SC35	2203-001573	C-CERAMIC,CHIP;0.012nF,5%,50V,NP0,TP,160		
SC29	2203-001573	C-CERAMIC,CHIP;0.012nF,5%,50V,NP0,TP,160		
ZC72	2203-001628	C-CERAMIC,CHIP;0.03nF,5%,50V,NP0,TP,1608		
ZC71	2203-001628	C-CERAMIC,CHIP;0.03nF,5%,50V,NP0,TP,1608		
RC39	2203-001636	C-CERAMIC,CHIP;0.033nF,5%,50V,NP0,TP,160		

Location no	Code no.	Description	Specification	Remarks
RC16	2203-001636	C-CERAMIC,CHIP;0.033nF,5%,50V,NP0,TP,160		
RC14	2203-001636	C-CERAMIC,CHIP;0.033nF,5%,50V,NP0,TP,160		
RC12	2203-001636	C-CERAMIC,CHIP;0.033nF,5%,50V,NP0,TP,160		
VC6	2203-001640	C-CERAMIC,CHIP;0.39nF,10%,50V,X7R,TP,160		
VC2	2203-001640	C-CERAMIC,CHIP;0.39nF,10%,50V,X7R,TP,160		
	2203-001652	C-CERAMIC,CHIP;470nF,+80-20%,16V,Y5V,TP,		
SC16	2203-001656	C-CERAMIC,CHIP;0.47nF,5%,50V,NP0,TP,1608		
SC15	2203-001656	C-CERAMIC,CHIP;0.47nF,5%,50V,NP0,TP,1608		
SC38	2203-005005	C-CERAMIC,CHIP;100nF,10%,16V,X7R,TP,1608		
SC37	2203-005005	C-CERAMIC,CHIP;100nF,10%,16V,X7R,TP,1608		
SC34	2203-005005	C-CERAMIC,CHIP;100nF,10%,16V,X7R,TP,1608		
SC33	2203-005005	C-CERAMIC,CHIP;100nF,10%,16V,X7R,TP,1608		
SC32	2203-005005	C-CERAMIC,CHIP;100nF,10%,16V,X7R,TP,1608		
SC31	2203-005005	C-CERAMIC,CHIP;100nF,10%,16V,X7R,TP,1608		
SC39	2203-005005	C-CERAMIC,CHIP;100nF,10%,16V,X7R,TP,1608		
TC20	2203-005005	C-CERAMIC,CHIP;100nF,10%,16V,X7R,TP,1608		
SC9	2203-005005	C-CERAMIC,CHIP;100nF,10%,16V,X7R,TP,1608		
SC8	2203-005005	C-CERAMIC,CHIP;100nF,10%,16V,X7R,TP,1608		
SC5	2203-005005	C-CERAMIC,CHIP;100nF,10%,16V,X7R,TP,1608		
SC40	2203-005005	C-CERAMIC,CHIP;100nF,10%,16V,X7R,TP,1608		
SC4	2203-005005	C-CERAMIC,CHIP;100nF,10%,16V,X7R,TP,1608		
SC18	2203-005005	C-CERAMIC,CHIP;100nF,10%,16V,X7R,TP,1608		
SC17	2203-005005	C-CERAMIC,CHIP;100nF,10%,16V,X7R,TP,1608		
RC8	2203-005005	C-CERAMIC,CHIP;100nF,10%,16V,X7R,TP,1608		
RC44	2203-005005	C-CERAMIC,CHIP;100nF,10%,16V,X7R,TP,1608		
RC43	2203-005005	C-CERAMIC,CHIP;100nF,10%,16V,X7R,TP,1608		
RC41	2203-005005	C-CERAMIC,CHIP;100nF,10%,16V,X7R,TP,1608		
SC21	2203-005005	C-CERAMIC,CHIP;100nF,10%,16V,X7R,TP,1608		
SC27	2203-005005	C-CERAMIC,CHIP;100nF,10%,16V,X7R,TP,1608		
SC26	2203-005005	C-CERAMIC,CHIP;100nF,10%,16V,X7R,TP,1608		
SC25	2203-005005	C-CERAMIC,CHIP;100nF,10%,16V,X7R,TP,1608		
SC24	2203-005005	C-CERAMIC,CHIP;100nF,10%,16V,X7R,TP,1608		
SC23	2203-005005	C-CERAMIC,CHIP;100nF,10%,16V,X7R,TP,1608		
SC22	2203-005005	C-CERAMIC,CHIP;100nF,10%,16V,X7R,TP,1608		
TC21	2203-005005	C-CERAMIC,CHIP;100nF,10%,16V,X7R,TP,1608		
ZC4	2203-005005	C-CERAMIC,CHIP;100nF,10%,16V,X7R,TP,1608		
ZC10	2203-005005	C-CERAMIC,CHIP;100nF,10%,16V,X7R,TP,1608		
UC9	2203-005005	C-CERAMIC,CHIP;100nF,10%,16V,X7R,TP,1608		
UC7	2203-005005	C-CERAMIC,CHIP;100nF,10%,16V,X7R,TP,1608		
UC5	2203-005005	C-CERAMIC,CHIP;100nF,10%,16V,X7R,TP,1608		
UC4	2203-005005	C-CERAMIC,CHIP;100nF,10%,16V,X7R,TP,1608		
ZC5	2203-005005	C-CERAMIC,CHIP;100nF,10%,16V,X7R,TP,1608		
ZC8	2203-005005	C-CERAMIC,CHIP;100nF,10%,16V,X7R,TP,1608		
ZC76	2203-005005	C-CERAMIC,CHIP;100nF,10%,16V,X7R,TP,1608		
ZC75	2203-005005	C-CERAMIC,CHIP;100nF,10%,16V,X7R,TP,1608		
ZC74	2203-005005	C-CERAMIC,CHIP;100nF,10%,16V,X7R,TP,1608		
ZC73	2203-005005	C-CERAMIC,CHIP;100nF,10%,16V,X7R,TP,1608		
ZC7	2203-005005	C-CERAMIC,CHIP;100nF,10%,16V,X7R,TP,1608		
TC7	2203-005005	C-CERAMIC,CHIP;100nF,10%,16V,X7R,TP,1608		
TC6	2203-005005	C-CERAMIC,CHIP;100nF,10%,16V,X7R,TP,1608		
TC5	2203-005005	C-CERAMIC,CHIP;100nF,10%,16V,X7R,TP,1608		
TC4	2203-005005	C-CERAMIC,CHIP;100nF,10%,16V,X7R,TP,1608		
TC3	2203-005005	C-CERAMIC,CHIP;100nF,10%,16V,X7R,TP,1608		
TC22	2203-005005	C-CERAMIC,CHIP;100nF,10%,16V,X7R,TP,1608		
UC10	2203-005005	C-CERAMIC,CHIP;100nF,10%,16V,X7R,TP,1608		
UC17	2203-005005	C-CERAMIC,CHIP;100nF,10%,16V,X7R,TP,1608		
UC16	2203-005005	C-CERAMIC,CHIP;100nF,10%,16V,X7R,TP,1608		
UC15	2203-005005	C-CERAMIC,CHIP;100nF,10%,16V,X7R,TP,1608		
UC14	2203-005005	C-CERAMIC,CHIP;100nF,10%,16V,X7R,TP,1608		
UC12	2203-005005	C-CERAMIC,CHIP;100nF,10%,16V,X7R,TP,1608		
UC11	2203-005005	C-CERAMIC,CHIP;100nF,10%,16V,X7R,TP,1608		
RC40	2203-005005	C-CERAMIC,CHIP;100nF,10%,16V,X7R,TP,1608		
DC22	2203-005005	C-CERAMIC,CHIP;100nF,10%,16V,X7R,TP,1608		
DC2	2203-005005	C-CERAMIC,CHIP;100nF,10%,16V,X7R,TP,1608		
DC15	2203-005005	C-CERAMIC,CHIP;100nF,10%,16V,X7R,TP,1608		
DC14	2203-005005	C-CERAMIC,CHIP;100nF,10%,16V,X7R,TP,1608		
DC13	2203-005005	C-CERAMIC,CHIP;100nF,10%,16V,X7R,TP,1608		
DC11	2203-005005	C-CERAMIC,CHIP;100nF,10%,16V,X7R,TP,1608		
DC3	2203-005005	C-CERAMIC,CHIP;100nF,10%,16V,X7R,TP,1608		
FC18	2203-005005	C-CERAMIC,CHIP;100nF,10%,16V,X7R,TP,1608		
FC17	2203-005005	C-CERAMIC,CHIP;100nF,10%,16V,X7R,TP,1608		
FC16	2203-005005	C-CERAMIC,CHIP;100nF,10%,16V,X7R,TP,1608		
FC15	2203-005005	C-CERAMIC,CHIP;100nF,10%,16V,X7R,TP,1608		
FC14	2203-005005	C-CERAMIC,CHIP;100nF,10%,16V,X7R,TP,1608		
DC8	2203-005005	C-CERAMIC,CHIP;100nF,10%,16V,X7R,TP,1608		
AC136	2203-005005	C-CERAMIC,CHIP;100nF,10%,16V,X7R,TP,1608		
AC134	2203-005005	C-CERAMIC,CHIP;100nF,10%,16V,X7R,TP,1608		
AC133	2203-005005	C-CERAMIC,CHIP;100nF,10%,16V,X7R,TP,1608		
AC132	2203-005005	C-CERAMIC,CHIP;100nF,10%,16V,X7R,TP,1608		
AC118	2203-005005	C-CERAMIC,CHIP;100nF,10%,16V,X7R,TP,1608		
AC117	2203-005005	C-CERAMIC,CHIP;100nF,10%,16V,X7R,TP,1608		
AC137	2203-005005	C-CERAMIC,CHIP;100nF,10%,16V,X7R,TP,1608		
DC1	2203-005005	C-CERAMIC,CHIP;100nF,10%,16V,X7R,TP,1608		
AC92	2203-005005	C-CERAMIC,CHIP;100nF,10%,16V,X7R,TP,1608		
AC91	2203-005005	C-CERAMIC,CHIP;100nF,10%,16V,X7R,TP,1608		
AC24	2203-005005	C-CERAMIC,CHIP;100nF,10%,16V,X7R,TP,1608		
AC18	2203-005005	C-CERAMIC,CHIP;100nF,10%,16V,X7R,TP,1608		
AC138	2203-005005	C-CERAMIC,CHIP;100nF,10%,16V,X7R,TP,1608		
FC19	2203-005005	C-CERAMIC,CHIP;100nF,10%,16V,X7R,TP,1608		
RC28	2203-005005	C-CERAMIC,CHIP;100nF,10%,16V,X7R,TP,1608		
RC23	2203-005005	C-CERAMIC,CHIP;100nF,10%,16V,X7R,TP,1608		
RC2	2203-005005	C-CERAMIC,CHIP;100nF,10%,16V,X7R,TP,1608		
RC11	2203-005005	C-CERAMIC,CHIP;100nF,10%,16V,X7R,TP,1608		

Location no	Code no.	Description Specification	Remarks
RC1	2203-005005	C-CERAMIC,CHIP;100nF,10%,16V,X7R,TP,1608	
PC9	2203-005005	C-CERAMIC,CHIP;100nF,10%,16V,X7R,TP,1608	
RC29	2203-005005	C-CERAMIC,CHIP;100nF,10%,16V,X7R,TP,1608	
RC4	2203-005005	C-CERAMIC,CHIP;100nF,10%,16V,X7R,TP,1608	
RC36	2203-005005	C-CERAMIC,CHIP;100nF,10%,16V,X7R,TP,1608	
RC35	2203-005005	C-CERAMIC,CHIP;100nF,10%,16V,X7R,TP,1608	
RC31	2203-005005	C-CERAMIC,CHIP;100nF,10%,16V,X7R,TP,1608	
RC30	2203-005005	C-CERAMIC,CHIP;100nF,10%,16V,X7R,TP,1608	
RC3	2203-005005	C-CERAMIC,CHIP;100nF,10%,16V,X7R,TP,1608	
LC2	2203-005005	C-CERAMIC,CHIP;100nF,10%,16V,X7R,TP,1608	
LC1	2203-005005	C-CERAMIC,CHIP;100nF,10%,16V,X7R,TP,1608	
FC8	2203-005005	C-CERAMIC,CHIP;100nF,10%,16V,X7R,TP,1608	
FC6	2203-005005	C-CERAMIC,CHIP;100nF,10%,16V,X7R,TP,1608	
FC5	2203-005005	C-CERAMIC,CHIP;100nF,10%,16V,X7R,TP,1608	
FC22	2203-005005	C-CERAMIC,CHIP;100nF,10%,16V,X7R,TP,1608	
LC3	2203-005005	C-CERAMIC,CHIP;100nF,10%,16V,X7R,TP,1608	
PC8	2203-005005	C-CERAMIC,CHIP;100nF,10%,16V,X7R,TP,1608	
PC14	2203-005005	C-CERAMIC,CHIP;100nF,10%,16V,X7R,TP,1608	
MC56	2203-005005	C-CERAMIC,CHIP;100nF,10%,16V,X7R,TP,1608	
MC55	2203-005005	C-CERAMIC,CHIP;100nF,10%,16V,X7R,TP,1608	
MC3	2203-005005	C-CERAMIC,CHIP;100nF,10%,16V,X7R,TP,1608	
MC2	2203-005005	C-CERAMIC,CHIP;100nF,10%,16V,X7R,TP,1608	
MC1	2203-005065	C-CERAMIC,CHIP;1000nF,+80-20%,10V,Y5V,TP	
RC7	2401-000240	C-AL;100uF,20%,10V,GP,TP,5x11,5	
RC20	2401-000240	C-AL;100uF,20%,10V,GP,TP,5x11,5	
PC13	2401-000240	C-AL;100uF,20%,10V,GP,TP,5x11,5	
PC10	2401-000240	C-AL;100uF,20%,10V,GP,TP,5x11,5	
AC116	2401-000438	C-AL;10UF,20%,25V,GP,-,5X11,5	
AC115	2401-000438	C-AL;10UF,20%,25V,GP,-,5X11,5	
AC102	2401-000438	C-AL;10UF,20%,25V,GP,-,5X11,5	
AC101	2401-000438	C-AL;10UF,20%,25V,GP,-,5X11,5	
ZC9	2401-000778	C-AL;220uF,20%,10V,GP,6.3x11,5MM,TP	
SC3	2401-000778	C-AL;220uF,20%,10V,GP,6.3x11,5MM,TP	
AC17	2401-000830	C-AL;220uF,20%,25V,GP,TP,8x11.5,5	
VC1	2401-001355	C-AL;470uF,20%,10V,GP,TP,8x11.5mm,5	
UC6	2401-001355	C-AL;470uF,20%,10V,GP,TP,8x11.5mm,5	
PC11	2401-001364	C-AL;470uF,20%,16V,GP,TP,10x12.5,5	
TC8	2401-001893	C-AL;100uF,20%,16V,GP,6*7,5MM,TP	
TC2	2401-001893	C-AL;100uF,20%,16V,GP,6*7,5MM,TP	
JC13	2401-001893	C-AL;100uF,20%,16V,GP,6*7,5MM,TP	
FC7	2401-001893	C-AL;100uF,20%,16V,GP,6*7,5MM,TP	
FC21	2401-001893	C-AL;100uF,20%,16V,GP,6*7,5MM,TP	
UC8	2401-001893	C-AL;100uF,20%,16V,GP,6*7,5MM,TP	
ZC6	2401-001893	C-AL;100uF,20%,16V,GP,6*7,5MM,TP	
ZC3	2401-001893	C-AL;100uF,20%,16V,GP,6*7,5MM,TP	
ZC2	2401-001893	C-AL;100uF,20%,16V,GP,6*7,5MM,TP	
ZC14	2401-001893	C-AL;100uF,20%,16V,GP,6*7,5MM,TP	
ZC1	2401-001893	C-AL;100uF,20%,16V,GP,6*7,5MM,TP	
FC20	2401-001893	C-AL;100uF,20%,16V,GP,6*7,5MM,TP	
AC94	2401-001893	C-AL;100uF,20%,16V,GP,6*7,5MM,TP	
AC93	2401-001893	C-AL;100uF,20%,16V,GP,6*7,5MM,TP	
AC135	2401-001893	C-AL;100uF,20%,16V,GP,6*7,5MM,TP	
AC131	2401-001893	C-AL;100uF,20%,16V,GP,6*7,5MM,TP	
AC110	2401-001893	C-AL;100uF,20%,16V,GP,6*7,5MM,TP	
DC12	2401-001893	C-AL;100uF,20%,16V,GP,6*7,5MM,TP	
FC13	2401-001893	C-AL;100uF,20%,16V,GP,6*7,5MM,TP	
FC12	2401-001893	C-AL;100uF,20%,16V,GP,6*7,5MM,TP	
FC11	2401-001893	C-AL;100uF,20%,16V,GP,6*7,5MM,TP	
DC4	2401-001893	C-AL;100uF,20%,16V,GP,6*7,5MM,TP	
DC21	2401-001893	C-AL;100uF,20%,16V,GP,6*7,5MM,TP	
RC37	2401-001975	C-AL;47uF,20%,16V,GP,TP,5x11mm,5mm	
RC45	2401-001975	C-AL;47uF,20%,16V,GP,TP,5x11mm,5mm	
UC13	2401-001975	C-AL;47uF,20%,16V,GP,TP,5x11mm,5mm	
RC34	2401-001975	C-AL;47uF,20%,16V,GP,TP,5x11mm,5mm	
AC23	2401-001975	C-AL;47uF,20%,16V,GP,TP,5x11mm,5mm	
AC112	2401-001975	C-AL;47uF,20%,16V,GP,TP,5x11mm,5mm	
AC111	2401-001975	C-AL;47uF,20%,16V,GP,TP,5x11mm,5mm	
VL2	2703-000274	INDUCTOR-SMD;2.2uH,10%,1.25x2x0.85mm	
VL1	2703-000274	INDUCTOR-SMD;2.2uH,10%,1.25x2x0.85mm	
UL1	2703-001254	INDUCTOR-SMD;1.8uH,10%,2x1.25x0.85mm	
RL2	3301-001069	BEAD-SMD;AB,1.6x0.8x0.8mm,-,-	
RL1	3301-001069	BEAD-SMD;AB,1.6x0.8x0.8mm,-,-	
AL21	3301-001069	BEAD-SMD;AB,1.6x0.8x0.8mm,-,-	
PL3	3301-001495	BEAD-SMD;AB,120OHM,2.0X1.2X0.9MM,2500MA	
PL7	3301-001495	BEAD-SMD;AB,120OHM,2.0X1.2X0.9MM,2500MA	
PL9	3301-001495	BEAD-SMD;AB,120OHM,2.0X1.2X0.9MM,2500MA	
ZL1	3301-001495	BEAD-SMD;AB,120OHM,2.0X1.2X0.9MM,2500MA	
ZL71	3301-001495	BEAD-SMD;AB,120OHM,2.0X1.2X0.9MM,2500MA	
ZL72	3301-001495	BEAD-SMD;AB,120OHM,2.0X1.2X0.9MM,2500MA	
ZL73	3301-001495	BEAD-SMD;AB,120OHM,2.0X1.2X0.9MM,2500MA	
AL1	3301-001495	BEAD-SMD;AB,120OHM,2.0X1.2X0.9MM,2500MA	
AL2	3301-001495	BEAD-SMD;AB,120OHM,2.0X1.2X0.9MM,2500MA	
DL1	3301-001495	BEAD-SMD;AB,120OHM,2.0X1.2X0.9MM,2500MA	
DL2	3301-001495	BEAD-SMD;AB,120OHM,2.0X1.2X0.9MM,2500MA	
DL5	3301-001495	BEAD-SMD;AB,120OHM,2.0X1.2X0.9MM,2500MA	
DL6	3301-001495	BEAD-SMD;AB,120OHM,2.0X1.2X0.9MM,2500MA	
PL10	3301-001495	BEAD-SMD;AB,120OHM,2.0X1.2X0.9MM,2500MA	
FIC4	AH09-00093A	IC MICOM;ATF1500A,PLCC,-,17.7*	OLD PART
FIC4	1301-001661	IC MICOM;ATF1502AS,PLCC	NEW PART(MP3)
FIC2	AH11-00099A	MASK ROM;MX23C3210,MAX-KD100,32M,-,SOP,	
ZIC1	AH14-10004R	IC;M74HCU04,SOP,TAPE 14P	
	AH97-00840A	**ASSY DVD DECK;-,CMS-D300,MX-DVA5**	
	0205-001106	GREASE-HARD;G-99004X,40~150,1KG	

Location no	Code no.	Description Specification	Remarks
	3710-000544	CONNECTOR-SOCKET;3P,1R,2.5MM,STRAIGHT,SN	
	3711-003379	CONNECTOR-HEADER;NOWALL,3P,1R,2.5mm,STRA	
	3809-001299	CABLE-FLAT;30V,80C,190MM,24P,1MM,UL20696	
	3809-001300	CABLE-FLAT;30V,80C,180MM,7P,1.25MM,UL289	
	AH97-00900B	**ASSY-DECK CDP;-,MXDVA5,ASSY DECK CDP**	
	3405-000101	SWITCH-MICRO;1.6V,1A,70gf,SPST	
	3711-000826	CONNECTOR-HEADER;BOX,2P,1R,2mm,ANGLE,SN	
	AH92-00995B	**ASSY PCB;MAX-ZL45,TAPE,DECK**	
	6002-000396	SCREW-TAPPING;BH,+,2,M2,L5,ZPC(WHT),SWCH	
	AH39-00021A	LEAD CONNECTOR ASSY;UL1533#28,300MM,-,-,	
	AH39-20002D	LEAD CONNECTOR ASSY;5264,-,3P,300MM,2970	
	AH59-01142A	DECK-CASSETTE;ADR266AMW,MAXB450,-,-,DC12	
	AH81-00101A	A/S-BELT SUB;ADR2400S,34.7,6602-001055,-	
	AH81-00102A	A/S-SOLENOID;ADR2400-1,MT75-00049A,-,-,-	
	AH81-00141A	A/S-HEAD PB;TC881CB,MT59-00044A,-,-,-,-	
	AH81-00363A	A/S-ASSY MOTOR;ADR246DSW,MT91-15012J,-,-	
	AH81-00364A	A/S-BELT MAIN1;ADR246DSW,6602-001056,-,-	
	AH81-00365A	A/S-BELT MAIN2;ADR246DSW,6602-001057,-,-	
	AH81-01029A	A/S PART-R/P HEAD ASSY;MAXB450,MT91-1101	
	AH61-00413B	BRACKET-DECK;MAX-B550,SPTE 0.3T,0.3T,-,-	
	AH92-01815A	**ASSY PCB-FRONT;MAX-KD110,FRONT**	
	0601-001490	LED;INVERTER,BLUE,3MM,465-477NM	
UIC4	0904-001621	IC-I/O CONTROLLER;PT8300,16BIT,SOP,28P,3	
UIC3	0904-001621	IC-I/O CONTROLLER;PT8300,16BIT,SOP,28P,3	
UIC2	0904-001621	IC-I/O CONTROLLER;PT8300,16BIT,SOP,28P,3	
MIC1	1201-001572	IC-PREAMP;2011,SIP,7P,17MIL,SINGLE,47,PL	
UIC5	1204-002110	IC-SOUND PROCESSOR;NJM2072D,DIP,8P,-,PLA	
UR106	2003-000690	R-METAL OXIDE(S);4.7ohm,5%,2W,AA,TP,4x12	
MVR1	2101-001052	VR-ROTARY;10KOHM,10%,0.05W,TOP	
UX2	2801-001394	CRYSTAL-UNIT;32.768KHz,20ppm,28-AAY,12.5	
UX1	2802-001174	RESONATOR-CERAMIC;10MHZ,0.5%,BK,8X3.5X3M	
UVR1	3406-001047	SWITCH-ROTARY;5V DC,0.5mA,-,12mm	
UVR2	3406-001050	SWITCH-ROTARY;5V DC,0.5mA,click,12mm	
UVR3	3406-001050	SWITCH-ROTARY;5V DC,0.5mA,click,12mm	
UCW5	3708-000451	CONNECTOR-FPC/FFC/PIC;16P,1.25mm,STRAIGH	
UCW2	3708-000451	CONNECTOR-FPC/FFC/PIC;16P,1.25mm,STRAIGH	
UCW1	3708-000451	CONNECTOR-FPC/FFC/PIC;16P,1.25mm,STRAIGH	
UCW4	3708-000452	CONNECTOR-FPC/FFC/PIC;19P,1.25mm,STRAIGH	
UCW6	3708-001212	CONNECTOR-FPC/FFC/PIC;27P,1.25mm,STRAIGH	
UCW8	3708-001845	CONNECTOR-FPC/FFC/PIC;23P,1.25MM,STRAIGH	
UCW3	3708-001845	CONNECTOR-FPC/FFC/PIC;23P,1.25MM,STRAIGH	
UCH1	3711-000907	CONNECTOR-HEADER;BOX,3P,1R,2mm,STRAIGHT,	
UCH2	3711-001018	CONNECTOR-HEADER;BOX,5P,1R,2mm,STRAIGHT,	
HJACK1	3722-000351	JACK-PHONE;11P,3.5PI,AG,BLK,-	
MJACK2	3722-001190	JACK-PHONE;9P/2C,6.43PI,AU,BLK,RC6701(EI	
MJACK1	3722-001190	JACK-PHONE;9P/2C,6.43PI,AU,BLK,RC6701(EI	
RE-EYE	AC59-60060A	MODULE REMOCON;GP1U281R,SHARP,38KHZ,-,-,	
UVFD1	AH07-00066A	VF DISPLAY;HNA-16LM24T,MAX-B550/570/VB55	
UIC1	AH11-00094A	MASK ROM;LC876748C-52B9,MAX-KD100,56K,-	
UCA2	AH39-00101A	LEAD CONNECTOR ASSY;-,5295,51004,5P,150M	
	AH39-00264A	WIRE HARNESS;W2000,#1007,-,02P,-,-,-,529	
UCA1	AH39-00477A	LEAD CONNECTOR-ASSY;HT-DB300,-,-,3P,-,-,	
	AH39-50001N	WIRE HARNESS;RING,1007#24,250MM,BLK	
UD41	0401-000101	DIODE-SWITCHING;1N4148,100V,200mA,DO-35,	
UD3	0401-000101	DIODE-SWITCHING;1N4148,100V,200mA,DO-35,	
UD22	0401-000101	DIODE-SWITCHING;1N4148,100V,200mA,DO-35,	
UD42	0401-000101	DIODE-SWITCHING;1N4148,100V,200mA,DO-35,	
UD7	0401-000101	DIODE-SWITCHING;1N4148,100V,200mA,DO-35,	
UD9	0401-000101	DIODE-SWITCHING;1N4148,100V,200mA,DO-35,	
HD1	0401-000101	DIODE-SWITCHING;1N4148,100V,200mA,DO-35,	
MD1	0401-000101	DIODE-SWITCHING;1N4148,100V,200mA,DO-35,	
UD11	0401-000101	DIODE-SWITCHING;1N4148,100V,200mA,DO-35,	
UD2	0401-000101	DIODE-SWITCHING;1N4148,100V,200mA,DO-35,	
UD18	0401-000101	DIODE-SWITCHING;1N4148,100V,200mA,DO-35,	
UD17	0401-000101	DIODE-SWITCHING;1N4148,100V,200mA,DO-35,	
UD21	0402-000127	DIODE-RECTIFIER;1N4002,100V,1A,DO-41,TP	
UD27	0402-000127	DIODE-RECTIFIER;1N4002,100V,1A,DO-41,TP	
UD30	0402-000127	DIODE-RECTIFIER;1N4002,100V,1A,DO-41,TP	
UD31	0402-000127	DIODE-RECTIFIER;1N4002,100V,1A,DO-41,TP	
UD20	0402-000127	DIODE-RECTIFIER;1N4002,100V,1A,DO-41,TP	
UD19	0402-000127	DIODE-RECTIFIER;1N4002,100V,1A,DO-41,TP	
UD16	0402-000127	DIODE-RECTIFIER;1N4002,100V,1A,DO-41,TP	
UD15	0402-000127	DIODE-RECTIFIER;1N4002,100V,1A,DO-41,TP	
UZD1	0403-000392	DIODE-ZENER;UZP4.7B,4.7V,4.4-5.0V,1W,DO-	
UQ1	0501-000398	TR-SMALL SIGNAL;KSC945,NPN,250mW,TO-92,T	
UQ2	0501-000398	TR-SMALL SIGNAL;KSC945,NPN,250mW,TO-92,T	
UQ6	0501-000407	TR-SMALL SIGNAL;KSD471A-Y,NPN,800mW,TO-9	
UQ5	0501-000407	TR-SMALL SIGNAL;KSD471A-Y,NPN,800mW,TO-9	
UQ4	0501-000407	TR-SMALL SIGNAL;KSD471A-Y,NPN,800mW,TO-9	
UQ3	0501-000407	TR-SMALL SIGNAL;KSD471A-Y,NPN,800mW,TO-9	
UQ9	0501-000610	TR-SMALL SIGNAL;KSA928A-Y,PNP,1W,TO-92L,	
UQ8	0501-000610	TR-SMALL SIGNAL;KSA928A-Y,PNP,1W,TO-92L,	
UQ7	0501-000610	TR-SMALL SIGNAL;KSA928A-Y,PNP,1W,TO-92L,	
UQ12	0504-000118	TR-DIGITAL;KSR1003,NPN,300MW,22K/22K,TO-	
UQ11	0504-000118	TR-DIGITAL;KSR1003,NPN,300MW,22K/22K,TO-	
ULED4	0601-001074	LED;ROUND,GRN,3mm,569nm	
ULED3	0601-001074	LED;ROUND,GRN,3mm,569nm	
ULED2	0601-001074	LED;ROUND,GRN,3mm,569nm	
ULED1	0601-001074	LED;ROUND,GRN,3mm,569nm	
ULD5	0601-001238	LED;ROUND,RED,3.1mm,697nm	
UR69	2001-000008	R-CARBON;15Kohm,5%,1/8W,AA,TP,1.8x3.2mm	

Location no	Code no.	Description	Specification	Remarks
UR62	2001-000008	R-CARBON;15Kohm,5%,1/8W,AA,TP,1.8x3.2mm		
UR174	2001-000008	R-CARBON;15Kohm,5%,1/8W,AA,TP,1.8x3.2mm		
UR173	2001-000008	R-CARBON;15Kohm,5%,1/8W,AA,TP,1.8x3.2mm		
UR150	2001-000027	R-CARBON;100ohm,5%,1/4W,AA,TP,2.4x6.4mm		
UR63	2001-000036	R-CARBON;330ohm,5%,1/4W,AA,TP,2.4x6.4mm		
UR107	2001-000037	R-CARBON(S);330OHM,5%,1/2W,AA,TP,2.4X6.4		
UR90	2001-000221	R-CARBON;1.2Kohm,5%,1/8W,AA,TP,1.8x3.2m		
UR129	2001-000221	R-CARBON;1.2Kohm,5%,1/8W,AA,TP,1.8x3.2m		
UR130	2001-000241	R-CARBON;1.5Kohm,5%,1/8W,AA,TP,1.8x3.2m		
UR91	2001-000241	R-CARBON;1.5Kohm,5%,1/8W,AA,TP,1.8x3.2m		
UR112	2001-000258	R-CARBON;1.8Kohm,5%,1/8W,AA,TP,1.8x3.2m		
MR40	2001-000273	R-CARBON;100Kohm,5%,1/8W,AA,TP,1.8x3.2m		
UR104	2001-000273	R-CARBON;100Kohm,5%,1/8W,AA,TP,1.8x3.2m		
UR75	2001-000281	R-CARBON;100ohm,5%,1/8W,AA,TP,1.8x3.2mm		
UR76	2001-000281	R-CARBON;100ohm,5%,1/8W,AA,TP,1.8x3.2mm		
UR77	2001-000281	R-CARBON;100ohm,5%,1/8W,AA,TP,1.8x3.2mm		
UR78	2001-000281	R-CARBON;100ohm,5%,1/8W,AA,TP,1.8x3.2mm		
MR3	2001-000281	R-CARBON;100ohm,5%,1/8W,AA,TP,1.8x3.2mm		
UR170	2001-000281	R-CARBON;100ohm,5%,1/8W,AA,TP,1.8x3.2mm		
UR171	2001-000281	R-CARBON;100ohm,5%,1/8W,AA,TP,1.8x3.2mm		
UR74	2001-000281	R-CARBON;100ohm,5%,1/8W,AA,TP,1.8x3.2mm		
UR6	2001-000290	R-CARBON;10Kohm,5%,1/8W,AA,TP,1.8x3.2mm		
UR54	2001-000290	R-CARBON;10Kohm,5%,1/8W,AA,TP,1.8x3.2mm		
UR5	2001-000290	R-CARBON;10Kohm,5%,1/8W,AA,TP,1.8x3.2mm		
UR64	2001-000290	R-CARBON;10Kohm,5%,1/8W,AA,TP,1.8x3.2mm		
UR7	2001-000290	R-CARBON;10Kohm,5%,1/8W,AA,TP,1.8x3.2mm		
UR70	2001-000290	R-CARBON;10Kohm,5%,1/8W,AA,TP,1.8x3.2mm		
UR71	2001-000290	R-CARBON;10Kohm,5%,1/8W,AA,TP,1.8x3.2mm		
UR47	2001-000290	R-CARBON;10Kohm,5%,1/8W,AA,TP,1.8x3.2mm		
UR3	2001-000290	R-CARBON;10Kohm,5%,1/8W,AA,TP,1.8x3.2mm		
UR39	2001-000290	R-CARBON;10Kohm,5%,1/8W,AA,TP,1.8x3.2mm		
UR4	2001-000290	R-CARBON;10Kohm,5%,1/8W,AA,TP,1.8x3.2mm		
UR40	2001-000290	R-CARBON;10Kohm,5%,1/8W,AA,TP,1.8x3.2mm		
UR41	2001-000290	R-CARBON;10Kohm,5%,1/8W,AA,TP,1.8x3.2mm		
UR42	2001-000290	R-CARBON;10Kohm,5%,1/8W,AA,TP,1.8x3.2mm		
UR43	2001-000290	R-CARBON;10Kohm,5%,1/8W,AA,TP,1.8x3.2mm		
UR86	2001-000290	R-CARBON;10Kohm,5%,1/8W,AA,TP,1.8x3.2mm		
UR87	2001-000290	R-CARBON;10Kohm,5%,1/8W,AA,TP,1.8x3.2mm		
UR9	2001-000290	R-CARBON;10Kohm,5%,1/8W,AA,TP,1.8x3.2mm		
UR92	2001-000290	R-CARBON;10Kohm,5%,1/8W,AA,TP,1.8x3.2mm		
UR93	2001-000290	R-CARBON;10Kohm,5%,1/8W,AA,TP,1.8x3.2mm		
UR94	2001-000290	R-CARBON;10Kohm,5%,1/8W,AA,TP,1.8x3.2mm		
UR95	2001-000290	R-CARBON;10Kohm,5%,1/8W,AA,TP,1.8x3.2mm		
UR85	2001-000290	R-CARBON;10Kohm,5%,1/8W,AA,TP,1.8x3.2mm		
UR72	2001-000290	R-CARBON;10Kohm,5%,1/8W,AA,TP,1.8x3.2mm		
UR73	2001-000290	R-CARBON;10Kohm,5%,1/8W,AA,TP,1.8x3.2mm		
UR8	2001-000290	R-CARBON;10Kohm,5%,1/8W,AA,TP,1.8x3.2mm		
UR80	2001-000290	R-CARBON;10Kohm,5%,1/8W,AA,TP,1.8x3.2mm		
UR81	2001-000290	R-CARBON;10Kohm,5%,1/8W,AA,TP,1.8x3.2mm		
UR82	2001-000290	R-CARBON;10Kohm,5%,1/8W,AA,TP,1.8x3.2mm		
UR84	2001-000290	R-CARBON;10Kohm,5%,1/8W,AA,TP,1.8x3.2mm		
UR120	2001-000290	R-CARBON;10Kohm,5%,1/8W,AA,TP,1.8x3.2mm		
UR121	2001-000290	R-CARBON;10Kohm,5%,1/8W,AA,TP,1.8x3.2mm		
UR122	2001-000290	R-CARBON;10Kohm,5%,1/8W,AA,TP,1.8x3.2mm		
UR13	2001-000290	R-CARBON;10Kohm,5%,1/8W,AA,TP,1.8x3.2mm		
UR135	2001-000290	R-CARBON;10Kohm,5%,1/8W,AA,TP,1.8x3.2mm		
UR136	2001-000290	R-CARBON;10Kohm,5%,1/8W,AA,TP,1.8x3.2mm		
UR137	2001-000290	R-CARBON;10Kohm,5%,1/8W,AA,TP,1.8x3.2mm		
UR12	2001-000290	R-CARBON;10Kohm,5%,1/8W,AA,TP,1.8x3.2mm		
MR21	2001-000290	R-CARBON;10Kohm,5%,1/8W,AA,TP,1.8x3.2mm		
UJ505	2001-000290	R-CARBON;10Kohm,5%,1/8W,AA,TP,1.8x3.2mm		
UR1	2001-000290	R-CARBON;10Kohm,5%,1/8W,AA,TP,1.8x3.2mm		
UR10	2001-000290	R-CARBON;10Kohm,5%,1/8W,AA,TP,1.8x3.2mm		
UR100	2001-000290	R-CARBON;10Kohm,5%,1/8W,AA,TP,1.8x3.2mm		
UR101	2001-000290	R-CARBON;10Kohm,5%,1/8W,AA,TP,1.8x3.2mm		
UR11	2001-000290	R-CARBON;10Kohm,5%,1/8W,AA,TP,1.8x3.2mm		
UR2	2001-000290	R-CARBON;10Kohm,5%,1/8W,AA,TP,1.8x3.2mm		
UR23	2001-000290	R-CARBON;10Kohm,5%,1/8W,AA,TP,1.8x3.2mm		
UR24	2001-000290	R-CARBON;10Kohm,5%,1/8W,AA,TP,1.8x3.2mm		
UR25	2001-000290	R-CARBON;10Kohm,5%,1/8W,AA,TP,1.8x3.2mm		
UR26	2001-000290	R-CARBON;10Kohm,5%,1/8W,AA,TP,1.8x3.2mm		
UR27	2001-000290	R-CARBON;10Kohm,5%,1/8W,AA,TP,1.8x3.2mm		
UR28	2001-000290	R-CARBON;10Kohm,5%,1/8W,AA,TP,1.8x3.2mm		
UR16	2001-000290	R-CARBON;10Kohm,5%,1/8W,AA,TP,1.8x3.2mm		
UR138	2001-000290	R-CARBON;10Kohm,5%,1/8W,AA,TP,1.8x3.2mm		
UR139	2001-000290	R-CARBON;10Kohm,5%,1/8W,AA,TP,1.8x3.2mm		
UR14	2001-000290	R-CARBON;10Kohm,5%,1/8W,AA,TP,1.8x3.2mm		
UR140	2001-000290	R-CARBON;10Kohm,5%,1/8W,AA,TP,1.8x3.2mm		
UR142	2001-000290	R-CARBON;10Kohm,5%,1/8W,AA,TP,1.8x3.2mm		
UR143	2001-000290	R-CARBON;10Kohm,5%,1/8W,AA,TP,1.8x3.2mm		
UR15	2001-000290	R-CARBON;10Kohm,5%,1/8W,AA,TP,1.8x3.2mm		
UR21	2001-000295	R-CARBON;10MOHM,5%,1/8W,AA,TP,1.8X3.2MM		
UR19	2001-000362	R-CARBON;150ohm,5%,1/8W,AA,TP,1.8x3.2mm		
UR131	2001-000405	R-CARBON;180OHM,5%,1/8W,AA,TP,1.8X3.2MM		
UR111	2001-000405	R-CARBON;180OHM,5%,1/8W,AA,TP,1.8X3.2MM		
UR109	2001-000405	R-CARBON;180OHM,5%,1/8W,AA,TP,1.8X3.2MM		
UR108	2001-000405	R-CARBON;180OHM,5%,1/8W,AA,TP,1.8X3.2MM		
UR89	2001-000429	R-CARBON;1Kohm,5%,1/8W,AA,TP,1.8x3.2mm		
UR128	2001-000429	R-CARBON;1Kohm,5%,1/8W,AA,TP,1.8x3.2mm		
UR22	2001-000435	R-CARBON;1Mohm,5%,1/8W,AA,TP,1.8x3.2mm		
MR4	2001-000435	R-CARBON;1Mohm,5%,1/8W,AA,TP,1.8x3.2mm		
UR88	2001-000449	R-CARBON;2.2Kohm,5%,1/8W,AA,TP,1.8x3.2m		
UR17	2001-000449	R-CARBON;2.2Kohm,5%,1/8W,AA,TP,1.8x3.2m		

Location no	Code no.	Description	Specification	Remarks
UR110	2001-000449	R-CARBON;2.2Kohm,5%,1/8W,AA,TP,1.8x3.2m		
MR6	2001-000449	R-CARBON;2.2Kohm,5%,1/8W,AA,TP,1.8x3.2m		
MR2	2001-000449	R-CARBON;2.2Kohm,5%,1/8W,AA,TP,1.8x3.2m		
UR133	2001-000472	R-CARBON;2.7Kohm,5%,1/8W,AA,TP,1.8x3.2m		
UR18	2001-000508	R-CARBON;220Kohm,5%,1/8W,AA,TP,1.8x3.2m		
UR124	2001-000522	R-CARBON;22Kohm,5%,1/8W,AA,TP,1.8x3.2mm		
UR172	2001-000522	R-CARBON;22Kohm,5%,1/8W,AA,TP,1.8x3.2mm		
UR44	2001-000522	R-CARBON;22Kohm,5%,1/8W,AA,TP,1.8x3.2mm		
UD23	2001-000525	R-CARBON;22ohm,5%,1/4W,AA,TP,2.4x6.4mm		
UJ1	2001-000527	R-CARBON;22ohm,5%,1/8W,AA,TP,1.8x3.2mm		
UR145	2001-000591	R-CARBON;3.3Kohm,5%,1/8W,AA,TP,1.8x3.2m		
UR52	2001-000613	R-CARBON;3.9Kohm,5%,1/8W,AA,TP,1.8x3.2m		
UR68	2001-000660	R-CARBON;33Kohm,5%,1/8W,AA,TP,1.8x3.2mm		
UR61	2001-000660	R-CARBON;33Kohm,5%,1/8W,AA,TP,1.8x3.2mm		
UR51	2001-000734	R-CARBON;4.7Kohm,5%,1/8W,AA,TP,1.8x3.2m		
UR53	2001-000734	R-CARBON;4.7Kohm,5%,1/8W,AA,TP,1.8x3.2m		
UR55	2001-000734	R-CARBON;4.7Kohm,5%,1/8W,AA,TP,1.8x3.2m		
UR56	2001-000734	R-CARBON;4.7Kohm,5%,1/8W,AA,TP,1.8x3.2m		
UR57	2001-000734	R-CARBON;4.7Kohm,5%,1/8W,AA,TP,1.8x3.2m		
UR46	2001-000734	R-CARBON;4.7Kohm,5%,1/8W,AA,TP,1.8x3.2m		
MR1	2001-000734	R-CARBON;4.7Kohm,5%,1/8W,AA,TP,1.8x3.2m		
MR7	2001-000734	R-CARBON;4.7Kohm,5%,1/8W,AA,TP,1.8x3.2m		
UR132	2001-000734	R-CARBON;4.7Kohm,5%,1/8W,AA,TP,1.8x3.2m		
UR146	2001-000734	R-CARBON;4.7Kohm,5%,1/8W,AA,TP,1.8x3.2m		
UR17	2001-000734	R-CARBON;4.7Kohm,5%,1/8W,AA,TP,1.8x3.2m		
HR2	2001-000745	R-CARBON;4.7ohm,5%,1/8W,AA,TP,1.8x3.2mm		
HR1	2001-000745	R-CARBON;4.7ohm,5%,1/8W,AA,TP,1.8x3.2mm		
UJ138	2001-000780	R-CARBON;470ohm,5%,1/8W,AA,TP,1.8x3.2mm		
UR34	2001-000786	R-CARBON;47Kohm,5%,1/8W,AA,TP,1.8x3.2mm		
UR33	2001-000786	R-CARBON;47Kohm,5%,1/8W,AA,TP,1.8x3.2mm		
UR32	2001-000786	R-CARBON;47Kohm,5%,1/8W,AA,TP,1.8x3.2mm		
UR35	2001-000786	R-CARBON;47Kohm,5%,1/8W,AA,TP,1.8x3.2mm		
UR36	2001-000786	R-CARBON;47Kohm,5%,1/8W,AA,TP,1.8x3.2mm		
UR37	2001-000786	R-CARBON;47Kohm,5%,1/8W,AA,TP,1.8x3.2mm		
UR38	2001-000786	R-CARBON;47Kohm,5%,1/8W,AA,TP,1.8x3.2mm		
MR20	2001-000786	R-CARBON;47Kohm,5%,1/8W,AA,TP,1.8x3.2mm		
MR2132	2001-000786	R-CARBON;47Kohm,5%,1/8W,AA,TP,1.8x3.2mm		
UR134	2001-000786	R-CARBON;47Kohm,5%,1/8W,AA,TP,1.8x3.2mm		
UR200	2001-000786	R-CARBON;47Kohm,5%,1/8W,AA,TP,1.8x3.2mm		
UR29	2001-000786	R-CARBON;47Kohm,5%,1/8W,AA,TP,1.8x3.2mm		
UR30	2001-000786	R-CARBON;47Kohm,5%,1/8W,AA,TP,1.8x3.2mm		
UR31	2001-000786	R-CARBON;47Kohm,5%,1/8W,AA,TP,1.8x3.2mm		
UR20	2001-000850	R-CARBON;560Kohm,5%,1/8W,AA,TP,1.8x3.2m		
UR119	2001-000890	R-CARBON;6.8Kohm,5%,1/8W,AA,TP,1.8x3.2m		
UR113	2001-000995	R-CARBON;820ohm,5%,1/8W,AA,TP,1.8x3.2mm		
UR127	2001-000995	R-CARBON;820ohm,5%,1/8W,AA,TP,1.8x3.2mm		
UR60	2001-001192	R-CARBON(S);820ohm,5%,1/2W,AA,TP,2.4x6.4		
UR59	2001-001192	R-CARBON(S);820ohm,5%,1/2W,AA,TP,2.4x6.4		
UR58	2001-001192	R-CARBON(S);820ohm,5%,1/2W,AA,TP,2.4x6.4		
URV1	2103-000341	VR-SEMI;2Kohm,30%,1/10W,TOP		
ZC5	2201-000132	C-CERAMIC,DISC;0.1NF,10%,500V,Y5P,TP,6.5		
UC11	2201-000300	C-CERAMIC,DISC;1NF,20%,50V,Y5T,TP,5X3MM,		
HC2	2201-000300	C-CERAMIC,DISC;1NF,20%,50V,Y5T,TP,5X3MM,		
HC1	2201-000300	C-CERAMIC,DISC;1NF,20%,50V,Y5T,TP,5X3MM,		
UC8	2201-000389	C-CERAMIC,DISC;0.022NF,5%,50V,C0G,TP,5X3		
UC7	2201-000389	C-CERAMIC,DISC;0.022NF,5%,50V,C0G,TP,5X3		
UC35	2201-000565	C-CERAMIC,DISC;47nF,+80-20%,-,,-,12.5x4m		
ZC1	2201-000565	C-CERAMIC,DISC;47nF,+80-20%,-,,-,12.5x4m		
ZC2	2201-000565	C-CERAMIC,DISC;47nF,+80-20%,-,,-,12.5x4m		
ZC4	2201-000565	C-CERAMIC,DISC;47nF,+80-20%,-,,-,12.5x4m		
UC1	2201-000565	C-CERAMIC,DISC;47nF,+80-20%,-,,-,12.5x4m		
UC10	2201-000565	C-CERAMIC,DISC;47nF,+80-20%,-,,-,12.5x4m		
UC15	2201-000565	C-CERAMIC,DISC;47nF,+80-20%,-,,-,12.5x4m		
UC3	2201-000565	C-CERAMIC,DISC;47nF,+80-20%,-,,-,12.5x4m		
UC17	2201-000783	C-CERAMIC,DISC;100NF,+80-20%,50V,Y5V,TP,		
UC60	2202-000780	C-CERAMIC,MLC-AXIAL;100nF,+80-20%,50V,Y5		
UC001	2202-000780	C-CERAMIC,MLC-AXIAL;100nF,+80-20%,50V,Y5		
UC24	2202-000796	C-CERAMIC,MLC-AXIAL;1NF,10%,50V,Y5P,TP,3		
UC25	2202-000796	C-CERAMIC,MLC-AXIAL;1NF,10%,50V,Y5P,TP,3		
UC39	2202-000796	C-CERAMIC,MLC-AXIAL;1NF,10%,50V,Y5P,TP,3		
UC901	2202-000796	C-CERAMIC,MLC-AXIAL;1NF,10%,50V,Y5P,TP,3		
UC18	2202-000796	C-CERAMIC,MLC-AXIAL;1NF,10%,50V,Y5P,TP,3		
UC19	2202-000796	C-CERAMIC,MLC-AXIAL;1NF,10%,50V,Y5P,TP,3		
UC20	2202-000796	C-CERAMIC,MLC-AXIAL;1NF,10%,50V,Y5P,TP,3		
UC21	2202-000796	C-CERAMIC,MLC-AXIAL;1NF,10%,50V,Y5P,TP,3		
UC28	2202-000797	C-CERAMIC,MLC-AXIAL;10NF,30%,16V,Y5S,TP,		
ZC3	2202-000854	C-CERAMIC,MLC-AXIAL;47nF,30%,50V,Y5R,TP,		
UC40	2301-000419	C-FILM,PEF;27nF,10%,50V,TP,7.5x10.5x4mm,		
UC37	2401-000438	C-AL;10UF,20%,25V,GP,-,5X11,5		
MC4	2401-000475	C-AL;10uF,20%,50V,GP,TP,5x11mm,5mm		
UC2	2401-000475	C-AL;10uF,20%,50V,GP,TP,5x11mm,5mm		
UC9	2401-000475	C-AL;10uF,20%,50V,GP,TP,5x11mm,5mm		
MC5	2401-001022	C-AL;3.3UF,20%,50V,GP,TP,5X11,5		
UC26	2401-001893	C-AL;100uF,20%,16V,GP,6*7,5MM,TP		
UC27	2401-001893	C-AL;100uF,20%,16V,GP,6*7,5MM,TP		
UC36	2401-001893	C-AL;100uF,20%,16V,GP,6*7,5MM,TP		
UC4	2401-001893	C-AL;100uF,20%,16V,GP,6*7,5MM,TP		
UC5	2401-001893	C-AL;100uF,20%,16V,GP,6*7,5MM,TP		
MC1	2401-001893	C-AL;100uF,20%,16V,GP,6*7,5MM,TP		
MC10	2401-001893	C-AL;100uF,20%,16V,GP,6*7,5MM,TP		
UC100	2401-001893	C-AL;100uF,20%,16V,GP,6*7,5MM,TP		
UC14	2401-001893	C-AL;100uF,20%,16V,GP,6*7,5MM,TP		
UC16	2401-001893	C-AL;100uF,20%,16V,GP,6*7,5MM,TP		

Location no	Code no.	Description Specification	Remarks
MC3	2401-001912	C-AL;1uF,20%,50V,GP,5*11,5mm,TP	
MC6	2401-001912	C-AL;1uF,20%,50V,GP,5*11,5mm,TP	
UC12	2401-001919	C-AL;2.2uF,20%,50V,GP,4*7,5MM,TP	
UC6	2401-001931	C-AL;220nF,20%,50V,-,TP,4x7mm,5	
MC2	2401-001975	C-AL;47uF,20%,16V,GP,TP,5x11mm,5mm	
UC38	2401-001975	C-AL;47uF,20%,16V,GP,TP,5x11mm,5mm	
MC30	2401-002180	C-AL;2.2uF,20%,50V,GP,TP,5x11mm,5mm	
UC13	2409-000123	C-EDL;47000uF,4uA,5.5V,-,BK,-,5mm	
UL4	2701-000114	INDUCTOR-AXIAL;10uH,10%,2.5x3.4mm	
UL3	2701-000114	INDUCTOR-AXIAL;10uH,10%,2.5x3.4mm	
UL2	2701-000114	INDUCTOR-AXIAL;10uH,10%,2.5x3.4mm	
UL19	2701-000114	INDUCTOR-AXIAL;10uH,10%,2.5x3.4mm	
UL18	2701-000114	INDUCTOR-AXIAL;10uH,10%,2.5x3.4mm	
UL9	2701-000114	INDUCTOR-AXIAL;10uH,10%,2.5x3.4mm	
UL8	2701-000114	INDUCTOR-AXIAL;10uH,10%,2.5x3.4mm	
UL7	2701-000114	INDUCTOR-AXIAL;10uH,10%,2.5x3.4mm	
UL6	2701-000114	INDUCTOR-AXIAL;10uH,10%,2.5x3.4mm	
UL5	2701-000114	INDUCTOR-AXIAL;10uH,10%,2.5x3.4mm	
UL12	2701-000114	INDUCTOR-AXIAL;10uH,10%,2.5x3.4mm	
UL11	2701-000114	INDUCTOR-AXIAL;10uH,10%,2.5x3.4mm	
UL10	2701-000114	INDUCTOR-AXIAL;10uH,10%,2.5x3.4mm	
UL1	2701-000114	INDUCTOR-AXIAL;10uH,10%,2.5x3.4mm	
HL1	2701-000114	INDUCTOR-AXIAL;10uH,10%,2.5x3.4mm	
UL17	2701-000114	INDUCTOR-AXIAL;10uH,10%,2.5x3.4mm	
UL16	2701-000114	INDUCTOR-AXIAL;10uH,10%,2.5x3.4mm	
UL15	2701-000114	INDUCTOR-AXIAL;10uH,10%,2.5x3.4mm	
UL14	2701-000114	INDUCTOR-AXIAL;10uH,10%,2.5x3.4mm	
UL13	2701-000114	INDUCTOR-AXIAL;10uH,10%,2.5x3.4mm	
HL2	2701-000177	INDUCTOR-AXIAL;33uH,10%,2.5x3.4mm	
HL1	2701-000177	INDUCTOR-AXIAL;33uH,10%,2.5x3.4mm	
USW5	3404-000165	SWITCH-TACT;12V,50mA,160gf,6x6mm,SPST	
USW4	3404-000165	SWITCH-TACT;12V,50mA,160gf,6x6mm,SPST	
USW3	3404-000165	SWITCH-TACT;12V,50mA,160gf,6x6mm,SPST	
USW2	3404-000165	SWITCH-TACT;12V,50mA,160gf,6x6mm,SPST	
USW6	3404-000165	SWITCH-TACT;12V,50mA,160gf,6x6mm,SPST	
USW7	3404-000165	SWITCH-TACT;12V,50mA,160gf,6x6mm,SPST	
USW8	3404-000165	SWITCH-TACT;12V,50mA,160gf,6x6mm,SPST	
USW9	3404-000165	SWITCH-TACT;12V,50mA,160gf,6x6mm,SPST	
USW17	3404-000165	SWITCH-TACT;12V,50mA,160gf,6x6mm,SPST	
USW1	3404-000165	SWITCH-TACT;12V,50mA,160gf,6x6mm,SPST	
USW10	3404-000165	SWITCH-TACT;12V,50mA,160gf,6x6mm,SPST	
USW11	3404-000165	SWITCH-TACT;12V,50mA,160gf,6x6mm,SPST	
USW12	3404-000165	SWITCH-TACT;12V,50mA,160gf,6x6mm,SPST	
USW16	3404-000165	SWITCH-TACT;12V,50mA,160gf,6x6mm,SPST	
USW15	3404-000165	SWITCH-TACT;12V,50mA,160gf,6x6mm,SPST	
USW14	3404-000165	SWITCH-TACT;12V,50mA,160gf,6x6mm,SPST	
USW13	3404-000165	SWITCH-TACT;12V,50mA,160gf,6x6mm,SPST	
	AH92-01816A	**ASSY PCB-MAIN;MAX-KD110,MAIN**	
RBD1	0402-001258	DIODE-BRIDGE;GBU606,600V,6A,SIP-4,BK	
RBD2	0402-001258	DIODE-BRIDGE;GBU606,600V,6A,SIP-4,BK	
OJAKC1	0603-001069	OPTIC TRANSMITTER;5V,8Mb/s,-,-17dBm,660n	
FIC1	1201-000191	IC-OP AMP;4558,DIP,8P,300MIL,DUAL,20V/mV	
FIC1	1201-000191	IC-OP AMP;4558,DIP,8P,300MIL,DUAL,20V/mV	
KIC1	1201-000191	IC-OP AMP;4558,DIP,8P,300MIL,DUAL,20V/mV	
DIC1	1201-001899	IC-PREAMP;HA12237F,QFP,40P,7X7MM,-,-,PLA	
RIC2	1203-000242	IC-POSI.FIXED REG.;7812,TO-220,3P,-,PLAS	
RIC1	1203-001653	IC-VOLTAGE REGULATOR;4959,MULTIWATT,15P,	
KIC2	1204-001730	IC-ECHO;M65855P,DIP,16P,300MIL,PLASTIC	
FIC2	1204-001776	IC-SOUND PROCESSOR;TDA7442D,SOP,28P,295M	
RR34	2003-000005	R-METAL OXIDE(S);1ohm,5%,2W,AA,TP,4x12mm	
RR35	2003-000390	R-METAL OXIDE(S);0.27OHM,5%,2W,AA,TP,	
RR36	2003-000390	R-METAL OXIDE(S);0.27OHM,5%,2W,AA,TP,	
RR9	2003-000455	R-METAL OXIDE(S);100ohm,5%,2W,AA,TP,4x12	
RR3	2003-000701	R-METAL OXIDE(S);470ohm,5%,2W,AA,TP,4x12	
RC18	2201-002128	C-CERAMIC,DISC;4.7NF,20%,400V,Y5U,BK,15X	
RC19	2201-002128	C-CERAMIC,DISC;4.7NF,20%,400V,Y5U,BK,15X	
	2401-000129	C-AL;1000uF,20%,16V,GP,-,10x16mm,5	
	2401-001886	C-AL;1000uF,20%,35V,GP,BK,16x25mm,5	
RC1	2401-003381	C-AL;3300uF,20%,63V,GP,BK,22x40,10	
RC2	2401-003381	C-AL;3300uF,20%,63V,GP,BK,22x40,10	
RC4	2401-003755	C-AL;6800UF,20%,35V,BP,TP,22X40MM,1	
RC3	2401-003755	C-AL;6800UF,20%,35V,BP,TP,22X40MM,1	
OLP1	2901-001139	FILTER-EMI ON BOARD;50V,.5A,-,390PF,7X2.	
RRL1	3501-001008	RELAY-POWER;12VDC,530MW,10000MA,1FORMC,1	
RF1	3601-000248	FUSE-CARTRIDGE;250V,2A,TIME-LAG,GLASS,5x	
TCW1	3708-000122	CONNECTOR-FPC/FFC/PIC;11P,1.25mm,ANGLE,S	
FCW4	3708-000181	CONNECTOR-FPC/FFC/PIC;16P,1.25mm,STRAIGH	
FCW2	3708-000181	CONNECTOR-FPC/FFC/PIC;16P,1.25mm,STRAIGH	
FCW1	3708-000181	CONNECTOR-FPC/FFC/PIC;16P,1.25mm,STRAIGH	
RCW2	3711-000190	CONNECTOR-HEADER;1WALL,2P,1R,7.92MM,STRA	
DCW2	3711-000907	CONNECTOR-HEADER;BOX,3P,1R,2mm,STRAIGHT,	
ACW1	3711-001011	CONNECTOR-HEADER;BOX,5P,1R,2.5mm,STRAIGH	
CCW1	3711-001137	CONNECTOR-HEADER;BOX,8P,1R,2mm,STRAIGHT,	
RCW1	3711-003075	CONNECTOR-HEADER;NOWALL,6P,1R,8mm,STRAIG	
DCW3	3711-003107	CONNECTOR-HEADER;BOX,3P,1R,2.5mm,STRAIGH	
DCW1	3711-003111	CONNECTOR-HEADER;BOX,6P,1R,2.5mm,STRAIGH	
RCW5	3711-003112	CONNECTOR-HEADER;BOX,8P,1R,2.5mm,STRAIGH	
VJACK1	3722-000379	JACK-PIN;4P/2C,3.5mm,#16~22,SN	
OIC1	AH14-10004R	IC;M74HCU04,SOP,TAPE 14P	
	AH26-00135C	TRANS POWER-XFO TRANS POWER;XFO TRANS PO	
DL2	AH26-10002W	TRANS TRAP-COIL;BIAS-TRAP105K,BIAS-TRAP,	
DL1	AH26-10002W	TRANS TRAP-COIL;BIAS-TRAP105K,BIAS-TRAP,	

Location no	Code no.	Description Specification	Remarks
DL4	AH26-10003C	TRANS TRAP-COIL;PCHNS-5371EQJ,BIAS-TRAP,	
RL2	AH27-10001F	COIL-CHOKE;27uH,K,Q30,-,-,DR(6.5*7.5),-,	
RL1	AH27-10001F	COIL-CHOKE;27uH,K,Q30,-,-,DR(6.5*7.5),-,	
	AH37-00005A	JACK---RCA;1P,S-440B,YELLOW,-,SHIELD PLAT	
OCW1	AH39-00096B	LEAD CONNECTOR ASSY;RXD-DV9,#1007,28,AWG	
	AH39-00347B	LEAD CONNECTOR;-,-,-,2P,-,-,-,5295,51004	
TD2	0401-000101	DIODE-SWITCHING;1N4148,100V,200mA,DO-35,	
TD1	0401-000101	DIODE-SWITCHING;1N4148,100V,200mA,DO-35,	
FD1	0401-000101	DIODE-SWITCHING;1N4148,100V,200mA,DO-35,	
DD1	0401-000101	DIODE-SWITCHING;1N4148,100V,200mA,DO-35,	
RD2	0402-000127	DIODE-RECTIFIER;1N4002,100V,1A,DO-41,TP	
RD13	0402-000127	DIODE-RECTIFIER;1N4002,100V,1A,DO-41,TP	
RD12	0402-000127	DIODE-RECTIFIER;1N4002,100V,1A,DO-41,TP	
FZD1	0403-000372	DIODE-ZENER;UZ9.1BM,9.1V,8.7-9.4V,500mW,	
RZD5	0403-000380	DIODE-ZENER;UZP13B,13V,12.4-14.1V,1W,DO-	
RZD2	0403-000564	DIODE-ZENER;TZP16A,16V,15.3-17.1V,1W,DO-	
RZD3	0403-000570	DIODE-ZENER;UZP18B,18V,16.9-19.1V,1W,DO-	
RZD4	0403-001010	DIODE-ZENER;UZP5.6B,5.6V,5.2-6.0V,1W,DO	
DQ9	0501-000010	TR-SMALL SIGNAL;KSC1008,NPN,800mW,TO-92,	
DQ8	0501-000010	TR-SMALL SIGNAL;KSC1008,NPN,800mW,TO-92,	
DQ7	0501-000010	TR-SMALL SIGNAL;KSC1008,NPN,800mW,TO-92,	
DQ6	0501-000010	TR-SMALL SIGNAL;KSC1008,NPN,800mW,TO-92,	
RQ2	0501-000294	TR-SMALL SIGNAL;KSA708-Y,PNP,800mW,TO-92	
CQ3	0501-000331	TR-SMALL SIGNAL;KSC1009-Y,NPN,800mW,TO-9	
CQ2	0501-000331	TR-SMALL SIGNAL;KSC1009-Y,NPN,800mW,TO-9	
DQ4	0501-000369	TR-SMALL SIGNAL;KSC2331-Y,NPN,1000mW,TO-	
FQ1	0501-000398	TR-SMALL SIGNAL;KSC945,NPN,250mW,TO-92,T	
DQ1	0501-000398	TR-SMALL SIGNAL;KSC945,NPN,250mW,TO-92,T	
DQ3	0501-000610	TR-SMALL SIGNAL;KSA928A-Y,PNP,1W,TO-92L,	
RQ1	0501-000610	TR-SMALL SIGNAL;KSA928A-Y,PNP,1W,TO-92L,	
KQ2	0504-000118	TR-DIGITAL;KSR1003,NPN,300MW,22K/22K,TO-	
CQ1	0504-001003	TR-DIGITAL;KSR2003,PNP,300MW,22K/22K,TO-	
DQ5	0504-001003	TR-DIGITAL;KSR2003,PNP,300MW,22K/22K,TO-	
CR7	2001-000008	R-CARBON;15Kohm,5%,1/8W,AA,TP,1.8x3.2mm	
CR4	2001-000008	R-CARBON;15Kohm,5%,1/8W,AA,TP,1.8x3.2mm	
FR11	2001-000027	R-CARBON;100ohm,5%,1/4W,AA,TP,2.4x6.4mm	
RR10	2001-000038	R-CARBON;390ohm,5%,1/4W,AA,TP,2.4x6.4mm	
RR11	2001-000050	R-CARBON;2.7Kohm,5%,1/4W,AA,TP,2.4x6.4m	
DR18	2001-000111	R-CARBON;150ohm,5%,1/4W,AA,TP,2.4x6.4mm	
	2001-000118	R-CARBON(S);180ohm,5%,1/2W,AA,TP,2.4x6.4	
DR6	2001-000241	R-CARBON;1.5Kohm,5%,1/8W,AA,TP,1.8x3.2m	
DR13	2001-000241	R-CARBON;1.5Kohm,5%,1/8W,AA,TP,1.8x3.2m	
FR25	2001-000273	R-CARBON;100Kohm,5%,1/8W,AA,TP,1.8x3.2m	
FR24	2001-000273	R-CARBON;100Kohm,5%,1/8W,AA,TP,1.8x3.2m	
TR2	2001-000281	R-CARBON;100ohm,5%,1/8W,AA,TP,1.8x3.2mm	
TR3	2001-000281	R-CARBON;100ohm,5%,1/8W,AA,TP,1.8x3.2mm	
TR4	2001-000281	R-CARBON;100ohm,5%,1/8W,AA,TP,1.8x3.2mm	
TR5	2001-000281	R-CARBON;100ohm,5%,1/8W,AA,TP,1.8x3.2mm	
TR6	2001-000281	R-CARBON;100ohm,5%,1/8W,AA,TP,1.8x3.2mm	
DR1	2001-000281	R-CARBON;100ohm,5%,1/8W,AA,TP,1.8x3.2mm	
DR17	2001-000281	R-CARBON;100ohm,5%,1/8W,AA,TP,1.8x3.2mm	
DR2	2001-000281	R-CARBON;100ohm,5%,1/8W,AA,TP,1.8x3.2mm	
DR4	2001-000281	R-CARBON;100ohm,5%,1/8W,AA,TP,1.8x3.2mm	
TR1	2001-000281	R-CARBON;100ohm,5%,1/8W,AA,TP,1.8x3.2mm	
KR24	2001-000290	R-CARBON;10Kohm,5%,1/8W,AA,TP,1.8x3.2mm	
DR3	2001-000290	R-CARBON;10Kohm,5%,1/8W,AA,TP,1.8x3.2mm	
DR9	2001-000302	R-CARBON;10ohm,5%,1/8W,AA,TP,1.8x3.2mm	
DR11	2001-000302	R-CARBON;10ohm,5%,1/8W,AA,TP,1.8x3.2mm	
FR21	2001-000319	R-CARBON;120Kohm,5%,1/8W,AA,TP,1.8x3.2m	
FR20	2001-000319	R-CARBON;120Kohm,5%,1/8W,AA,TP,1.8x3.2m	
TR9	2001-000331	R-CARBON;12Kohm,5%,1/8W,AA,TP,1.8x3.2mm	
TR12	2001-000331	R-CARBON;12Kohm,5%,1/8W,AA,TP,1.8x3.2mm	
FR8	2001-000331	R-CARBON;12Kohm,5%,1/8W,AA,TP,1.8x3.2mm	
FR1	2001-000331	R-CARBON;12Kohm,5%,1/8W,AA,TP,1.8x3.2mm	
CR5	2001-000411	R-CARBON;18Kohm,5%,1/8W,AA,TP,1.8x3.2mm	
CR2	2001-000411	R-CARBON;18Kohm,5%,1/8W,AA,TP,1.8x3.2mm	
RR4	2001-000429	R-CARBON;1Kohm,5%,1/8W,AA,TP,1.8x3.2mm	
JW10	2001-000429	R-CARBON;1Kohm,5%,1/8W,AA,TP,1.8x3.2mm	
FR22	2001-000429	R-CARBON;1Kohm,5%,1/8W,AA,TP,1.8x3.2mm	
DR10	2001-000435	R-CARBON;1Mohm,5%,1/8W,AA,TP,1.8x3.2mm	
KR31	2001-000449	R-CARBON;2.2Kohm,5%,1/8W,AA,TP,1.8x3.2m	
KR15	2001-000449	R-CARBON;2.2Kohm,5%,1/8W,AA,TP,1.8x3.2m	
KR12	2001-000449	R-CARBON;2.2Kohm,5%,1/8W,AA,TP,1.8x3.2m	
FR17	2001-000449	R-CARBON;2.2Kohm,5%,1/8W,AA,TP,1.8x3.2m	
FR16	2001-000449	R-CARBON;2.2Kohm,5%,1/8W,AA,TP,1.8x3.2m	
RR19	2001-000472	R-CARBON;2.7Kohm,5%,1/8W,AA,TP,1.8x3.2m	
WR3	2001-000515	R-CARBON;220ohm,5%,1/8W,AA,TP,1.8x3.2mm	
DR12	2001-000522	R-CARBON;22Kohm,5%,1/8W,AA,TP,1.8x3.2mm	
TR8	2001-000563	R-CARBON;27Kohm,5%,1/8W,AA,TP,1.8x3.2mm	
RR12	2001-000563	R-CARBON;27Kohm,5%,1/8W,AA,TP,1.8x3.2mm	
DR7	2001-000563	R-CARBON;27Kohm,5%,1/8W,AA,TP,1.8x3.2mm	
DR14	2001-000563	R-CARBON;27Kohm,5%,1/8W,AA,TP,1.8x3.2mm	
DR38	2001-000563	R-CARBON;27Kohm,5%,1/8W,AA,TP,1.8x3.2mm	
DR39	2001-000563	R-CARBON;27Kohm,5%,1/8W,AA,TP,1.8x3.2mm	
FR7	2001-000591	R-CARBON;3.3Kohm,5%,1/8W,AA,TP,1.8x3.2m	
FR5	2001-000591	R-CARBON;3.3Kohm,5%,1/8W,AA,TP,1.8x3.2m	
FR4	2001-000591	R-CARBON;3.3Kohm,5%,1/8W,AA,TP,1.8x3.2m	
FR2	2001-000591	R-CARBON;3.3Kohm,5%,1/8W,AA,TP,1.8x3.2m	
DR20	2001-000591	R-CARBON;3.3Kohm,5%,1/8W,AA,TP,1.8x3.2m	
RR6	2001-000613	R-CARBON;3.9Kohm,5%,1/8W,AA,TP,1.8x3.2m	
DR28	2001-000613	R-CARBON;3.9Kohm,5%,1/8W,AA,TP,1.8x3.2m	
DR21	2001-000613	R-CARBON;3.9Kohm,5%,1/8W,AA,TP,1.8x3.2m	
FR12	2001-000645	R-CARBON;330Kohm,5%,1/8W,AA,TP,1.8x3.2m	

Location no	Code no.	Description	Specification	Remarks
FR13	2001-000645	R-CARBON;330Kohm,5%,1/8W,AA,TP,1.8x3.2m		
RR1A	2001-000660	R-CARBON;33Kohm,5%,1/8W,AA,TP,1.8x3.2mm		
KR8	2001-000660	R-CARBON;33Kohm,5%,1/8W,AA,TP,1.8x3.2mm		
KR7	2001-000660	R-CARBON;33Kohm,5%,1/8W,AA,TP,1.8x3.2mm		
RR14	2001-000734	R-CARBON;4.7Kohm,5%,1/8W,AA,TP,1.8x3.2m		
KR9	2001-000734	R-CARBON;4.7Kohm,5%,1/8W,AA,TP,1.8x3.2m		
KR6	2001-000734	R-CARBON;4.7Kohm,5%,1/8W,AA,TP,1.8x3.2m		
KR27	2001-000734	R-CARBON;4.7Kohm,5%,1/8W,AA,TP,1.8x3.2m		
RR5	2001-000734	R-CARBON;4.7Kohm,5%,1/8W,AA,TP,1.8x3.2m		
TR10	2001-000734	R-CARBON;4.7Kohm,5%,1/8W,AA,TP,1.8x3.2m		
TR11	2001-000734	R-CARBON;4.7Kohm,5%,1/8W,AA,TP,1.8x3.2m		
TR7	2001-000734	R-CARBON;4.7Kohm,5%,1/8W,AA,TP,1.8x3.2m		
DR102	2001-000734	R-CARBON;4.7Kohm,5%,1/8W,AA,TP,1.8x3.2m		
DR15	2001-000734	R-CARBON;4.7Kohm,5%,1/8W,AA,TP,1.8x3.2m		
DR16	2001-000734	R-CARBON;4.7Kohm,5%,1/8W,AA,TP,1.8x3.2m		
DR22	2001-000734	R-CARBON;4.7Kohm,5%,1/8W,AA,TP,1.8x3.2m		
DR25	2001-000734	R-CARBON;4.7Kohm,5%,1/8W,AA,TP,1.8x3.2m		
DR29	2001-000734	R-CARBON;4.7Kohm,5%,1/8W,AA,TP,1.8x3.2m		
FR18	2001-000734	R-CARBON;4.7Kohm,5%,1/8W,AA,TP,1.8x3.2m		
JW102	2001-000734	R-CARBON;4.7Kohm,5%,1/8W,AA,TP,1.8x3.2m		
FR23	2001-000773	R-CARBON;470Kohm,5%,1/8W,AA,TP,1.8x3.2m		
KR17	2001-000786	R-CARBON;47Kohm,5%,1/8W,AA,TP,1.8x3.2mm		
KR16	2001-000786	R-CARBON;47Kohm,5%,1/8W,AA,TP,1.8x3.2mm		
FR6	2001-000786	R-CARBON;47Kohm,5%,1/8W,AA,TP,1.8x3.2mm		
FR3	2001-000786	R-CARBON;47Kohm,5%,1/8W,AA,TP,1.8x3.2mm		
FR15	2001-000786	R-CARBON;47Kohm,5%,1/8W,AA,TP,1.8x3.2mm		
CR3	2001-000786	R-CARBON;47Kohm,5%,1/8W,AA,TP,1.8x3.2mm		
CR6	2001-000786	R-CARBON;47Kohm,5%,1/8W,AA,TP,1.8x3.2mm		
DR19	2001-000786	R-CARBON;47Kohm,5%,1/8W,AA,TP,1.8x3.2mm		
FR14	2001-000786	R-CARBON;47Kohm,5%,1/8W,AA,TP,1.8x3.2mm		
FR9	2001-000802	R-CARBON;5.6Kohm,5%,1/8W,AA,TP,1.8x3.2m		
FR10	2001-000802	R-CARBON;5.6Kohm,5%,1/8W,AA,TP,1.8x3.2m		
FR21	2001-000864	R-CARBON;56Kohm,5%,1/8W,AA,TP,1.8x3.2mm		
FR20	2001-000864	R-CARBON;56Kohm,5%,1/8W,AA,TP,1.8x3.2mm		
DR37	2001-000890	R-CARBON;6.8Kohm,5%,1/8W,AA,TP,1.8x3.2m		
JW11	2001-000890	R-CARBON;6.8Kohm,5%,1/8W,AA,TP,1.8x3.2m		
KR4	2001-000890	R-CARBON;6.8Kohm,5%,1/8W,AA,TP,1.8x3.2m		
KR5	2001-000890	R-CARBON;6.8Kohm,5%,1/8W,AA,TP,1.8x3.2m		
RR7	2001-000890	R-CARBON;6.8Kohm,5%,1/8W,AA,TP,1.8x3.2m		
DR12	2001-000890	R-CARBON;6.8Kohm,5%,1/8W,AA,TP,1.8x3.2m		
DR27	2001-000890	R-CARBON;6.8Kohm,5%,1/8W,AA,TP,1.8x3.2m		
DR34	2001-000890	R-CARBON;6.8Kohm,5%,1/8W,AA,TP,1.8x3.2m		
DR35	2001-000890	R-CARBON;6.8Kohm,5%,1/8W,AA,TP,1.8x3.2m		
DR36	2001-000890	R-CARBON;6.8Kohm,5%,1/8W,AA,TP,1.8x3.2m		
DR33	2001-000924	R-CARBON;680ohm,5%,1/8W,AA,TP,1.8x3.2mm		
KR13	2001-000924	R-CARBON;680ohm,5%,1/8W,AA,TP,1.8x3.2mm		
KR14	2001-000924	R-CARBON;680ohm,5%,1/8W,AA,TP,1.8x3.2mm		
DR30	2001-000924	R-CARBON;680ohm,5%,1/8W,AA,TP,1.8x3.2mm		
DR31	2001-000924	R-CARBON;680ohm,5%,1/8W,AA,TP,1.8x3.2mm		
DR32	2001-000924	R-CARBON;680ohm,5%,1/8W,AA,TP,1.8x3.2mm		
DR26	2001-000977	R-CARBON;8.2KOHM,5%,1/8W,AA,TP,1.8x3.2m		
DR8	2001-000977	R-CARBON;8.2KOHM,5%,1/8W,AA,TP,1.8x3.2m		
RR13	2001-001004	R-CARBON;82ohm,5%,1/4W,AA,TP,2.4x6.4mm		
DR23	2001-001096	R-CARBON(S);2.2ohm,5%,1/2W,AA,TP,2.4x6.4		
RR2	2001-001153	R-CARBON(S);47ohm,5%,1/2W,AA,TP,2.4x6.4m		
RR1	2001-001153	R-CARBON(S);47ohm,5%,1/2W,AA,TP,2.4x6.4m		
RR8	2003-000542	R-METAL OXIDE(S);1ohm,5%,1W,AA,TP,3.3x9m		
KC4	2201-000146	C-CERAMIC,DISC;0.1NF,5%,50V,SL,TP,5X3.5M		
KC3	2201-000146	C-CERAMIC,DISC;0.1NF,5%,50V,SL,TP,5X3.5M		
FC6	2201-000146	C-CERAMIC,DISC;0.1NF,5%,50V,SL,TP,5X3.5M		
FC3	2201-000146	C-CERAMIC,DISC;0.1NF,5%,50V,SL,TP,5X3.5M		
RC26	2201-000161	C-CERAMIC,DISC;10NF,+80-20%,500V,Y5V,TP,		
RC25	2201-000161	C-CERAMIC,DISC;10NF,+80-20%,500V,Y5V,TP,		
OC4	2201-000300	C-CERAMIC,DISC;1NF,20%,50V,Y5T,TP,5X3MM,		
DC23	2201-000300	C-CERAMIC,DISC;1NF,20%,50V,Y5T,TP,5X3MM,		
DC22	2201-000300	C-CERAMIC,DISC;1NF,20%,50V,Y5T,TP,5X3MM,		
DC19	2201-000300	C-CERAMIC,DISC;1NF,20%,50V,Y5T,TP,5X3MM,		
DC18	2201-000300	C-CERAMIC,DISC;1NF,20%,50V,Y5T,TP,5X3MM,		
FC28	2201-000368	C-CERAMIC,DISC;0.22NF,10%,50V,SL,TP,6.5X		
FC29	2201-000368	C-CERAMIC,DISC;0.22NF,10%,50V,SL,TP,6.5X		
KC7	2201-000368	C-CERAMIC,DISC;0.22NF,10%,50V,SL,TP,6.5X		
KC8	2201-000368	C-CERAMIC,DISC;0.22NF,10%,50V,SL,TP,6.5X		
DC17	2201-000368	C-CERAMIC,DISC;0.22NF,10%,50V,SL,TP,6.5X		
DC33	2201-000368	C-CERAMIC,DISC;0.22NF,10%,50V,SL,TP,6.5X		
FC26	2201-000368	C-CERAMIC,DISC;0.22NF,10%,50V,SL,TP,6.5X		
FC27	2201-000368	C-CERAMIC,DISC;0.22NF,10%,50V,SL,TP,6.5X		
OC1	2201-000487	C-CERAMIC,DISC;33pF,5%,50V,SL,TP,5x3,5m		
DC29	2201-000674	C-CERAMIC,DISC;0.82NF,10%,50V,Y5P,BK,5X3		
DC1	2201-000674	C-CERAMIC,DISC;0.82NF,10%,50V,Y5P,BK,5X3		
KC18	2202-000780	C-CERAMIC,MLC-AXIAL;100nF,+80-20%,50V,Y5		
EMC1	2202-000780	C-CERAMIC,MLC-AXIAL;100nF,+80-20%,50V,Y5		
TC7	2202-000781	C-CERAMIC,MLC-AXIAL;100pF,10%,50V,Y5P,TP		
TC6	2202-000781	C-CERAMIC,MLC-AXIAL;100pF,10%,50V,Y5P,TP		
TC5	2202-000781	C-CERAMIC,MLC-AXIAL;100pF,10%,50V,Y5P,TP		
TC4	2202-000781	C-CERAMIC,MLC-AXIAL;100pF,10%,50V,Y5P,TP		
TC1	2202-000781	C-CERAMIC,MLC-AXIAL;100pF,10%,50V,Y5P,TP		
TC2	2202-000781	C-CERAMIC,MLC-AXIAL;100pF,10%,50V,Y5P,TP		
TC3	2202-000781	C-CERAMIC,MLC-AXIAL;100pF,10%,50V,Y5P,TP		
TC20	2202-000796	C-CERAMIC,MLC-AXIAL;1NF,10%,50V,Y5P,TP,3		
KC17	2202-000797	C-CERAMIC,MLC-AXIAL;10NF,30%,16V,Y5S,TP,		
KC20	2202-000797	C-CERAMIC,MLC-AXIAL;10NF,30%,16V,Y5S,TP,		
KC10	2202-000829	C-CERAMIC,MLC-AXIAL;0.82NF,10%,50V,Y5P,T		
KC15	2202-000854	C-CERAMIC,MLC-AXIAL;47nF,30%,50V,Y5R,TP,		

Location no	Code no.	Description	Specification	Remarks
KC16	2202-000854	C-CERAMIC,MLC-AXIAL;47nF,30%,50V,Y5R,TP,		
FC14	2301-000361	C-FILM,PEF;1.2nF,10%,50V,TP,-,5mm		
FC15	2301-000375	C-FILM,PEF;100nF,10%,TP,50V,11x12.5x6.5,		
FC16	2301-000375	C-FILM,PEF;100nF,10%,TP,50V,11x12.5x6.5,		
FC17	2301-000375	C-FILM,PEF;100nF,10%,TP,50V,11x12.5x6.5,		
FC32	2301-000375	C-FILM,PEF;100nF,10%,TP,50V,11x12.5x6.5,		
FC13	2301-000375	C-FILM,PEF;100nF,10%,TP,50V,11x12.5x6.5,		
DC10	2301-000375	C-FILM,PEF;100nF,10%,TP,50V,11x12.5x6.5,		
DC25	2301-000375	C-FILM,PEF;100nF,10%,TP,50V,11x12.5x6.5,		
DC26	2301-000375	C-FILM,PEF;100nF,10%,TP,50V,11x12.5x6.5,		
DC7	2301-000375	C-FILM,PEF;100nF,10%,TP,50V,11x12.5x6.5,		
DC24	2301-000379	C-FILM,PEF;10nF,10%,50V,TP,6x12x3.5mm,-		
DC11	2301-000379	C-FILM,PEF;10nF,10%,50V,TP,6x12x3.5mm,-		
DC31	2301-000385	C-FILM,PEF;12nF,10%,50V,TP,7x12x3.5mm,-		
DC37	2301-000385	C-FILM,PEF;12nF,10%,50V,TP,7x12x3.5mm,-		
DC16	2301-000404	C-FILM,PEF;2.2nF,10%,50V,TP,5.5x12x3mm,-		
DC15	2301-000404	C-FILM,PEF;2.2nF,10%,50V,TP,5.5x12x3mm,-		
DC14	2301-000404	C-FILM,PEF;2.2nF,10%,50V,TP,5.5x12x3mm,-		
DC13	2301-000407	C-FILM,PEF;2.7nF,10%,50V,TP,5.5x12x3mm,-		
CC2	2301-000449	C-FILM,PEF;47nF,10%,50V,TP,9.5x12.5x5mm,		
FC11	2301-000454	C-FILM,PEF;5.6nF,10%,50V,TP,6x12x3,3.5mm		
FC12	2301-000454	C-FILM,PEF;5.6nF,10%,50V,TP,6x12x3,3.5mm		
RC6	2401-000357	C-AL;100UF,0.2.50V,GP,8*12,5MM,SSL		
RC9	2401-000438	C-AL;10UF,20%,25V,GP,-,5X11,5		
DC30	2401-000438	C-AL;10UF,20%,25V,GP,-,5X11,5		
CC5	2401-000438	C-AL;10UF,20%,25V,GP,-,5X11,5		
FC21	2401-000649	C-AL;2.2uF,20%,50V,BP,TP,5x11,5		
FC20	2401-000649	C-AL;2.2uF,20%,50V,BP,TP,5x11,5		
RC11	2401-000830	C-AL;220uF,20%,25V,GP,TP,8x11.5,5		
RC10	2401-000907	C-AL;22uF,20%,16V,GP,TP,5x11mm,5mm		
FC10	2401-000907	C-AL;22uF,20%,16V,GP,TP,5x11mm,5mm		
CC1	2401-000907	C-AL;22uF,20%,16V,GP,TP,5x11mm,5mm		
FC36	2401-001022	C-AL;3.3UF,20%,50V,GP,TP,5X11,5		
FC35	2401-001022	C-AL;3.3UF,20%,50V,GP,TP,5X11,5		
FC34	2401-001022	C-AL;3.3UF,20%,50V,GP,TP,5X11,5		
FC1	2401-001022	C-AL;3.3UF,20%,50V,GP,TP,5X11,5		
DC36	2401-001022	C-AL;3.3UF,20%,50V,GP,TP,5X11,5		
DC35	2401-001022	C-AL;3.3UF,20%,50V,GP,TP,5X11,5		
DC5	2401-001080	C-AL;330nF,20%,50V,GP,5*11,5mm,TP		
DC4	2401-001102	C-AL;330uF,20%,16V,GP,TP,8x11.5mm,5		
FC25	2401-001238	C-AL;4.7uF,20%,25V,GP,3*5,2.5MM,TP		
FC24	2401-001324	C-AL;0.47UF,20%,50V,GP,BK,3X5,2.5		
FC5	2401-001893	C-AL;100uF,20%,16V,GP,6*7,5MM,TP		
CC4	2401-001893	C-AL;100uF,20%,16V,GP,6*7,5MM,TP		
CC3	2401-001893	C-AL;100uF,20%,16V,GP,6*7,5MM,TP		
FC31	2401-001912	C-AL;1uF,20%,50V,GP,5*11,5mm,TP		
FC8	2401-001912	C-AL;1uF,20%,50V,GP,5*11,5mm,TP		
FC9	2401-001912	C-AL;1uF,20%,50V,GP,5*11,5mm,TP		
RC7	2401-001912	C-AL;1uF,20%,50V,GP,5*11,5mm,TP		
DC20	2401-001912	C-AL;1uF,20%,50V,GP,5*11,5mm,TP		
FC22	2401-001912	C-AL;1uF,20%,50V,GP,5*11,5mm,TP		
FC23	2401-001912	C-AL;1uF,20%,50V,GP,5*11,5mm,TP		
FC30	2401-001912	C-AL;1uF,20%,50V,GP,5*11,5mm,TP		
KC6	2401-001954	C-AL;4.7uF,20%,50V,GP,TP,5x11mm,5mm		
KC9	2401-001954	C-AL;4.7uF,20%,50V,GP,TP,5x11mm,5mm		
RC8	2401-001954	C-AL;4.7uF,20%,50V,GP,TP,5x11mm,5mm		
FC2	2401-001954	C-AL;4.7uF,20%,50V,GP,TP,5x11mm,5mm		
FC33	2401-001954	C-AL;4.7uF,20%,50V,GP,TP,5x11mm,5mm		
FC4	2401-001954	C-AL;4.7uF,20%,50V,GP,TP,5x11mm,5mm		
DC32	2401-001975	C-AL;47uF,20%,16V,GP,TP,5x11mm,5mm		
DC21	2401-001975	C-AL;47uF,20%,16V,GP,TP,5x11mm,5mm		
DC2	2401-001975	C-AL;47uF,20%,16V,GP,TP,5x11mm,5mm		
DC12	2401-001975	C-AL;47uF,20%,16V,GP,TP,5x11mm,5mm		
DC9	2401-002180	C-AL;2.2uF,20%,50V,GP,TP,5x11mm,5mm		
FC18	2401-002180	C-AL;2.2uF,20%,50V,GP,TP,5x11mm,5mm		
FC19	2401-002180	C-AL;2.2uF,20%,50V,GP,TP,5x11mm,5mm		
FC20	2401-002180	C-AL;2.2uF,20%,50V,GP,TP,5x11mm,5mm		
FC21	2401-002180	C-AL;2.2uF,20%,50V,GP,TP,5x11mm,5mm		
DC27	2401-002180	C-AL;2.2uF,20%,50V,GP,TP,5x11mm,5mm		
DC28	2401-002180	C-AL;2.2uF,20%,50V,GP,TP,5x11mm,5mm		
DC34	2401-002180	C-AL;2.2uF,20%,50V,GP,TP,5x11mm,5mm		
DC6	2401-002180	C-AL;2.2uF,20%,50V,GP,TP,5x11mm,5mm		
DC8	2401-002180	C-AL;2.2uF,20%,50V,GP,TP,5x11mm,5mm		
CL2	2701-000178	INDUCTOR-AXIAL;33uH,10%,3x7mm		
CL1	2701-000298	INDUCTOR-AXIAL;470uH,10%,4.2x9.8mm		
DL3	2701-000298	INDUCTOR-AXIAL;470uH,10%,4.2x9.8mm		
RF2	3602-000147	FUSE-CLIP;250V,7.5A,30mohm		
RF1	3602-000147	FUSE-CLIP;250V,7.5A,30mohm		
	AH92-01817A	**ASSY PCB-AUDIO;MAX-KD110,AUDIO**		
AIC1	1201-001715	IC-POWER AMP;402-100,SIP,15P,233MIL,DUAL		
AR5R	2003-000390	R-METAL OXIDE(S);0.27OHM,5%,2W,AA,TP,		
AR5L	2003-000390	R-METAL OXIDE(S);0.27OHM,5%,2W,AA,TP,		
AR4R	2003-000390	R-METAL OXIDE(S);0.27OHM,5%,2W,AA,TP,		
AR4L	2003-000390	R-METAL OXIDE(S);0.27OHM,5%,2W,AA,TP,		
AR402	2003-000734	R-METAL OXIDE(S);560ohm,5%,2W,AA,TP,4x12		
AR401	2003-000734	R-METAL OXIDE(S);560ohm,5%,2W,AA,TP,4x12		
AC302	2401-000230	C-AL;100uF,20%,100V,GP,TP,12.5x20mm		
AC301	2401-000230	C-AL;100uF,20%,100V,GP,TP,12.5x20mm		
AC2R	2401-000230	C-AL;100uF,20%,100V,GP,TP,12.5x20mm		
AC2L	2401-000230	C-AL;100uF,20%,100V,GP,TP,12.5x20mm		
AC20	2401-000871	C-AL;220uF,20%,50V,GP,-,10x16mm,5mm		
ARL1	3501-001197	RELAY-MINIATURE;12VDC,0.54W,44.4MA,1FORM		

Location no	Code no.	Description Specification	Remarks
ACW1	3708-000181	CONNECTOR-FPC/FFC/PIC;16P,1.25mm,STRAIGH	
KCWB	3711-000820	CONNECTOR-HEADER;BOX,2P,1R,2.5MM,STRAIGH	
SPK1	3716-001132	TERMINAL-BLOCK;SOLDER,4P,-,-,-	
AL3	AH27-90001A	COIL-SPRING;-,2.2UH,-,-,-,SPRING,-,-,-,-	
AL2	AH27-90001A	COIL-SPRING;-,2.2UH,-,-,-,SPRING,-,-,-,-	
AL1R	AH27-90001A	COIL-SPRING;-,2.2UH,-,-,-,SPRING,-,-,-,-	
AL1L	AH27-90001A	COIL-SPRING;-,2.2UH,-,-,-,SPRING,-,-,-,-	
ACW2	AH39-00249A	LEAD CONNECTOR ASSY;MX-K5,#1007,22AWG,UL	
ACW3	AH39-00408A	LEAD CONNECTOR ASSY;MAX-DL44,1007#22,-,2	
AD6L	0401-000101	DIODE-SWITCHING;1N4148,100V,200mA,DO-35,	
AD6R	0401-000101	DIODE-SWITCHING;1N4148,100V,200mA,DO-35,	
AD7	0401-000101	DIODE-SWITCHING;1N4148,100V,200mA,DO-35,	
AD5	0402-000127	DIODE-RECTIFIER;1N4002,100V,1A,DO-41,TP	
AQ6	0501-000010	TR-SMALL SIGNAL;KSC1008,NPN,800mW,TO-92,	
AQ7L	0501-000296	TR-SMALL SIGNAL;KSA709-Y,PNP,800mW,TO-92	
AQ7R	0501-000296	TR-SMALL SIGNAL;KSA709-Y,PNP,800mW,TO-92	
AQ11	0501-000331	TR-SMALL SIGNAL;KSC1009-Y,NPN,800mW,TO-9	
AQ10	0501-000331	TR-SMALL SIGNAL;KSC1009-Y,NPN,800mW,TO-9	
AQ7	0501-000407	TR-SMALL SIGNAL;KSD471A-Y,NPN,800mW,TO-9	
AQ5	0501-000407	TR-SMALL SIGNAL;KSD471A-Y,NPN,800mW,TO-9	
AQ2R	0501-000407	TR-SMALL SIGNAL;KSD471A-Y,NPN,800mW,TO-9	
AQ2L	0501-000407	TR-SMALL SIGNAL;KSD471A-Y,NPN,800mW,TO-9	
AQ8	0501-000610	TR-SMALL SIGNAL;KSA928A-Y,PNP,1W,TO-92L,	
AQ1A	0504-000118	TR-DIGITAL;KSR1003,NPN,300MW,22K/22K,TO-	
AQ1	0504-001003	TR-DIGITAL;KSR2003,PNP,300MW,22K/22K,TO-	
AR40R	2001-000008	R-CARBON;15Kohm,5%,1/8W,AA,TP,1.8x3.2mm	
AR40L	2001-000008	R-CARBON;15Kohm,5%,1/8W,AA,TP,1.8x3.2mm	
AR6L	2001-000017	R-CARBON;4.7ohm,5%,1/4W,AA,TP,2.4x6.4mm	
AR6R	2001-000017	R-CARBON;4.7ohm,5%,1/4W,AA,TP,2.4x6.4mm	
AR77	2001-000065	R-CARBON;10Kohm,5%,1/4W,AA,TP,2.4x6.4mm	
AJR9	2001-000073	R-CARBON;33KOHM,5%,1/4W,AA,TP,2.4X6.4MM	
AR2L	2001-000221	R-CARBON;1.2Kohm,5%,1/8W,AA,TP,1.8x3.2m	
AR2R	2001-000221	R-CARBON;1.2Kohm,5%,1/8W,AA,TP,1.8x3.2m	
AR46	2001-000273	R-CARBON;100Kohm,5%,1/8W,AA,TP,1.8x3.2m	
AR44R	2001-000273	R-CARBON;100Kohm,5%,1/8W,AA,TP,1.8x3.2m	
AR44L	2001-000273	R-CARBON;100Kohm,5%,1/8W,AA,TP,1.8x3.2m	
AR26	2001-000273	R-CARBON;100Kohm,5%,1/8W,AA,TP,1.8x3.2m	
AR9	2001-000290	R-CARBON;10Kohm,5%,1/8W,AA,TP,1.8x3.2mm	
AR31	2001-000290	R-CARBON;10Kohm,5%,1/8W,AA,TP,1.8x3.2mm	
AR30	2001-000290	R-CARBON;10Kohm,5%,1/8W,AA,TP,1.8x3.2mm	
AR1R	2001-000290	R-CARBON;10Kohm,5%,1/8W,AA,TP,1.8x3.2mm	
AR1L	2001-000290	R-CARBON;10Kohm,5%,1/8W,AA,TP,1.8x3.2mm	
AR41R	2001-000302	R-CARBON;10ohm,5%,1/8W,AA,TP,1.8x3.2mm	
AR41L	2001-000302	R-CARBON;10ohm,5%,1/8W,AA,TP,1.8x3.2mm	
AR9	2001-000429	R-CARBON;1Kohm,5%,1/8W,AA,TP,1.8x3.2mm	
AR405R	2001-000429	R-CARBON;1Kohm,5%,1/8W,AA,TP,1.8x3.2mm	
AR405L	2001-000429	R-CARBON;1Kohm,5%,1/8W,AA,TP,1.8x3.2mm	
AR21	2001-000429	R-CARBON;1Kohm,5%,1/8W,AA,TP,1.8x3.2mm	
AR35	2001-000429	R-CARBON;1Kohm,5%,1/8W,AA,TP,1.8x3.2mm	
AR36	2001-000429	R-CARBON;1Kohm,5%,1/8W,AA,TP,1.8x3.2mm	
AR7L	2001-000449	R-CARBON;2.2Kohm,5%,1/8W,AA,TP,1.8x3.2m	
AR7R	2001-000449	R-CARBON;2.2Kohm,5%,1/8W,AA,TP,1.8x3.2m	
AR31	2001-000508	R-CARBON;220Kohm,5%,1/8W,AA,TP,1.8x3.2m	
AR25	2001-000515	R-CARBON;220ohm,5%,1/8W,AA,TP,1.8x3.2mm	
AR47	2001-000522	R-CARBON;22Kohm,5%,1/8W,AA,TP,1.8x3.2mm	
AR42R	2001-000522	R-CARBON;22Kohm,5%,1/8W,AA,TP,1.8x3.2mm	
AR42L	2001-000522	R-CARBON;22Kohm,5%,1/8W,AA,TP,1.8x3.2mm	
AR405R	2001-000522	R-CARBON;22Kohm,5%,1/8W,AA,TP,1.8x3.2mm	
AR405L	2001-000522	R-CARBON;22Kohm,5%,1/8W,AA,TP,1.8x3.2mm	
AR8R	2001-000591	R-CARBON;3.3Kohm,5%,1/8W,AA,TP,1.8x3.2m	
AR8L	2001-000591	R-CARBON;3.3Kohm,5%,1/8W,AA,TP,1.8x3.2m	
AR33	2001-000591	R-CARBON;3.3Kohm,5%,1/8W,AA,TP,1.8x3.2m	
AR32	2001-000591	R-CARBON;3.3Kohm,5%,1/8W,AA,TP,1.8x3.2m	
AR20	2001-000591	R-CARBON;3.3Kohm,5%,1/8W,AA,TP,1.8x3.2m	
AR43R	2001-000734	R-CARBON;4.7Kohm,5%,1/8W,AA,TP,1.8x3.2m	
AR43L	2001-000734	R-CARBON;4.7Kohm,5%,1/8W,AA,TP,1.8x3.2m	
AR45R	2001-000786	R-CARBON;47Kohm,5%,1/8W,AA,TP,1.8x3.2mm	
AR45L	2001-000786	R-CARBON;47Kohm,5%,1/8W,AA,TP,1.8x3.2mm	
AR310	2001-000786	R-CARBON;47Kohm,5%,1/8W,AA,TP,1.8x3.2mm	
AR309	2001-000786	R-CARBON;47Kohm,5%,1/8W,AA,TP,1.8x3.2mm	
AR56R	2001-000864	R-CARBON;56Kohm,5%,1/8W,AA,TP,1.8x3.2mm	
AR56L	2001-000864	R-CARBON;56Kohm,5%,1/8W,AA,TP,1.8x3.2mm	
AR3R	2001-000864	R-CARBON;56Kohm,5%,1/8W,AA,TP,1.8x3.2mm	
AR3L	2001-000864	R-CARBON;56Kohm,5%,1/8W,AA,TP,1.8x3.2mm	
AR404	2001-001077	R-CARBON(S);150ohm,5%,1/2W,AA,TP,2.4x6.4	
AR403	2001-001077	R-CARBON(S);150ohm,5%,1/2W,AA,TP,2.4x6.4	
AR78	2003-000008	R-METAL OXIDE(S);100ohm,5%,1W,AA,TP,3.3x	
AR13	2003-000008	R-METAL OXIDE(S);100ohm,5%,1W,AA,TP,3.3x	
AR15L	2003-000689	R-METAL OXIDE(S);4.7ohm,5%,1W,AA,TP,3.3x	
AR15R	2003-000689	R-METAL OXIDE(S);4.7ohm,5%,1W,AA,TP,3.3x	
AC58R	2201-000368	C-CERAMIC,DISC;0.22NF,10%,50V,SL,TP,6.5X	
AC1R	2201-000368	C-CERAMIC,DISC;0.22NF,10%,50V,SL,TP,6.5X	
AC1L	2201-000368	C-CERAMIC,DISC;0.22NF,10%,50V,SL,TP,6.5X	
ACE2	2201-000381	C-CERAMIC,DISC;22nF,+80%,50V,-,,8x4mm,-	
AC57L	2201-000532	C-CERAMIC,DISC;4.7NF,10%,50V,Y5P,TP,8X3.	
AC56R	2201-000532	C-CERAMIC,DISC;4.7NF,10%,50V,Y5P,TP,8X3.	
AC56L	2201-000532	C-CERAMIC,DISC;4.7NF,10%,50V,Y5P,TP,8X3.	
AC17R	2201-000532	C-CERAMIC,DISC;4.7NF,10%,50V,Y5P,TP,8X3.	
AC17L	2201-000532	C-CERAMIC,DISC;4.7NF,10%,50V,Y5P,TP,8X3.	
AC16R	2201-000783	C-CERAMIC,DISC;100NF,+80-20%,50V,Y5V,TP,	
AC16L	2201-000783	C-CERAMIC,DISC;100NF,+80-20%,50V,Y5V,TP,	
AC5R	2201-000838	C-CERAMIC,DISC;0.003NF,0.25PF,50V,C0G,TP	
AC5L	2201-000838	C-CERAMIC,DISC;0.003NF,0.25PF,50V,C0G,TP	

Location no	Code no.	Description Specification	Remarks
AC7	2202-000854	C-CERAMIC,MLC-AXIAL;47nF,30%,50V,Y5R,TP,	
AC15R	2301-000375	C-FILM,PEF;100nF,10%,TP,50V,11x12.5x6.5,	
AC15L	2301-000375	C-FILM,PEF;100nF,10%,TP,50V,11x12.5x6.5,	
AC18L	2301-000404	C-FILM,PEF;2.2nF,10%,50V,TP,5.5x12x3mm,-	
AC18R	2301-000404	C-FILM,PEF;2.2nF,10%,50V,TP,5.5x12x3mm,-	
AC6L	2401-000385	C-AL;10uF,20%,100V,GP,TP,6.3x11,5	
AC3R	2401-000385	C-AL;10uF,20%,100V,GP,TP,6.3x11,5	
AC40	2401-000970	C-AL;22uF,20%,50V,WT,TP,5x11,5	
AC4R	2401-001164	C-AL;33uF,20%,16V,GP,TP,5x11mm,5mm	
AC4L	2401-001164	C-AL;33uF,20%,16V,GP,TP,5x11mm,5mm	
AC21	2401-001912	C-AL;1uF,20%,50V,GP,5*11,5mm,TP	
AC23	2401-002180	C-AL;2.2uF,20%,50V,GP,TP,5x11mm,5mm	
AC22	2401-002180	C-AL;2.2uF,20%,50V,GP,TP,5x11mm,5mm	
	AH92-01818A	**ASSY PCB-POWER/JOG;MAX-KD110,POWER/JOG**	
JVR1	3406-001054	SWITCH-ROTARY;5V DC,0.5mA,-,7.5mm	
JCW1	3708-000452	CONNECTOR-FPC/FFC/PIC;19P,1.25mm,STRAIGH	
JQ4	0501-000341	TR-SMALL SIGNAL;KSC1623-L,NPN,200mW,SOT-	
JQ5	0501-000341	TR-SMALL SIGNAL;KSC1623-L,NPN,200mW,SOT-	
JQ6	0501-000341	TR-SMALL SIGNAL;KSC1623-L,NPN,200mW,SOT-	
JQ7	0501-000341	TR-SMALL SIGNAL;KSC1623-L,NPN,200mW,SOT-	
JQ8	0501-000341	TR-SMALL SIGNAL;KSC1623-L,NPN,200mW,SOT-	
JQ9	0501-000341	TR-SMALL SIGNAL;KSC1623-L,NPN,200mW,SOT-	
JQ1	0501-000341	TR-SMALL SIGNAL;KSC1623-L,NPN,200mW,SOT-	
JQ10	0501-000341	TR-SMALL SIGNAL;KSC1623-L,NPN,200mW,SOT-	
JQ11	0501-000341	TR-SMALL SIGNAL;KSC1623-L,NPN,200mW,SOT-	
JQ3	0501-000341	TR-SMALL SIGNAL;KSC1623-L,NPN,200mW,SOT-	
JQ2	0501-000341	TR-SMALL SIGNAL;KSC1623-L,NPN,200mW,SOT-	
JQ12	0501-000341	TR-SMALL SIGNAL;KSC1623-L,NPN,200mW,SOT-	
JLD4	0601-001074	LED;ROUND,GRN,3mm,569nm	
JLD5	0601-001074	LED;ROUND,GRN,3mm,569nm	
JLD6	0601-001074	LED;ROUND,GRN,3mm,569nm	
JLD7	0601-001074	LED;ROUND,GRN,3mm,569nm	
JLD8	0601-001074	LED;ROUND,GRN,3mm,569nm	
JLD9	0601-001074	LED;ROUND,GRN,3mm,569nm	
JLD1	0601-001074	LED;ROUND,GRN,3mm,569nm	
JLD10	0601-001074	LED;ROUND,GRN,3mm,569nm	
JLD11	0601-001074	LED;ROUND,GRN,3mm,569nm	
JLD3	0601-001074	LED;ROUND,GRN,3mm,569nm	
JLD2	0601-001074	LED;ROUND,GRN,3mm,569nm	
JLD12	0601-001074	LED;ROUND,GRN,3mm,569nm	
JJW34	2007-000029	R-CHIP;0ohm,5%,1/8W,TP,2012	
JJW35	2007-000029	R-CHIP;0ohm,5%,1/8W,TP,2012	
JJW36	2007-000029	R-CHIP;0ohm,5%,1/8W,TP,2012	
JJW39	2007-000029	R-CHIP;0ohm,5%,1/8W,TP,2012	
JJW4	2007-000029	R-CHIP;0ohm,5%,1/8W,TP,2012	
JJW3	2007-000029	R-CHIP;0ohm,5%,1/8W,TP,2012	
JJW30	2007-000029	R-CHIP;0ohm,5%,1/8W,TP,2012	
JJW31	2007-000029	R-CHIP;0ohm,5%,1/8W,TP,2012	
JJW32	2007-000029	R-CHIP;0ohm,5%,1/8W,TP,2012	
JJW33	2007-000029	R-CHIP;0ohm,5%,1/8W,TP,2012	
JJW5	2007-000029	R-CHIP;0ohm,5%,1/8W,TP,2012	
JJW6	2007-000029	R-CHIP;0ohm,5%,1/8W,TP,2012	
JJW7	2007-000029	R-CHIP;0ohm,5%,1/8W,TP,2012	
JJW8	2007-000029	R-CHIP;0ohm,5%,1/8W,TP,2012	
JJW9	2007-000029	R-CHIP;0ohm,5%,1/8W,TP,2012	
JJW40	2007-000029	R-CHIP;0ohm,5%,1/8W,TP,2012	
JJW41	2007-000029	R-CHIP;0ohm,5%,1/8W,TP,2012	
JJW42	2007-000029	R-CHIP;0ohm,5%,1/8W,TP,2012	
JJW43	2007-000029	R-CHIP;0ohm,5%,1/8W,TP,2012	
JJW44	2007-000029	R-CHIP;0ohm,5%,1/8W,TP,2012	
JJW15	2007-000029	R-CHIP;0ohm,5%,1/8W,TP,2012	
JJW16	2007-000029	R-CHIP;0ohm,5%,1/8W,TP,2012	
JJW17	2007-000029	R-CHIP;0ohm,5%,1/8W,TP,2012	
JJW18	2007-000029	R-CHIP;0ohm,5%,1/8W,TP,2012	
JJW19	2007-000029	R-CHIP;0ohm,5%,1/8W,TP,2012	
JJW1	2007-000029	R-CHIP;0ohm,5%,1/8W,TP,2012	
JJW11	2007-000029	R-CHIP;0ohm,5%,1/8W,TP,2012	
JJW12	2007-000029	R-CHIP;0ohm,5%,1/8W,TP,2012	
JJW13	2007-000029	R-CHIP;0ohm,5%,1/8W,TP,2012	
JJW14	2007-000029	R-CHIP;0ohm,5%,1/8W,TP,2012	
JJW25	2007-000029	R-CHIP;0ohm,5%,1/8W,TP,2012	
JJW26	2007-000029	R-CHIP;0ohm,5%,1/8W,TP,2012	
JJW27	2007-000029	R-CHIP;0ohm,5%,1/8W,TP,2012	
JJW28	2007-000029	R-CHIP;0ohm,5%,1/8W,TP,2012	
JJW29	2007-000029	R-CHIP;0ohm,5%,1/8W,TP,2012	
JJW2	2007-000029	R-CHIP;0ohm,5%,1/8W,TP,2012	
JJW20	2007-000029	R-CHIP;0ohm,5%,1/8W,TP,2012	
JJW21	2007-000029	R-CHIP;0ohm,5%,1/8W,TP,2012	
JJW23	2007-000029	R-CHIP;0ohm,5%,1/8W,TP,2012	
JJW24	2007-000029	R-CHIP;0ohm,5%,1/8W,TP,2012	
JR8	2007-000221	R-CHIP;1.2Kohm,5%,1/8W,TP,2012	
JR9	2007-000241	R-CHIP;1.5Kohm,5%,1/8W,TP,2012	
JR13	2007-000267	R-CHIP;1.8Kohm,5%,1/8W,TP,2012	
JR32	2007-000267	R-CHIP;1.8Kohm,5%,1/8W,TP,2012	
JR27	2007-000300	R-CHIP;10Kohm,5%,1/8W,TP,2012	
JR25	2007-000468	R-CHIP;1Kohm,5%,1/8W,TP,2012	
JR36	2007-000468	R-CHIP;1Kohm,5%,1/8W,TP,2012	
JR37	2007-000468	R-CHIP;1Kohm,5%,1/8W,TP,2012	
JR38	2007-000468	R-CHIP;1Kohm,5%,1/8W,TP,2012	
JR6	2007-000468	R-CHIP;1Kohm,5%,1/8W,TP,2012	
JR7	2007-000468	R-CHIP;1Kohm,5%,1/8W,TP,2012	
JR1	2007-000468	R-CHIP;1Kohm,5%,1/8W,TP,2012	

Location no	Code no.	Description Specification	Remarks
JR11	2007-000468	R-CHIP;1Kohm,5%,1/8W,TP,2012	
JR16	2007-000468	R-CHIP;1Kohm,5%,1/8W,TP,2012	
JR19	2007-000468	R-CHIP;1Kohm,5%,1/8W,TP,2012	
JR2	2007-000468	R-CHIP;1Kohm,5%,1/8W,TP,2012	
JR24	2007-000468	R-CHIP;1Kohm,5%,1/8W,TP,2012	
JR34	2007-000493	R-CHIP;2.2Kohm,5%,1/8W,TP,2012	
JR15	2007-000493	R-CHIP;2.2Kohm,5%,1/8W,TP,2012	
JR26	2007-000572	R-CHIP;220ohm,5%,1/8W,TP,2012	
JR28	2007-000572	R-CHIP;220ohm,5%,1/8W,TP,2012	
JR3	2007-000572	R-CHIP;220ohm,5%,1/8W,TP,2012	
JR33	2007-000572	R-CHIP;220ohm,5%,1/8W,TP,2012	
JR35	2007-000572	R-CHIP;220ohm,5%,1/8W,TP,2012	
JR5	2007-000572	R-CHIP;220ohm,5%,1/8W,TP,2012	
JR10	2007-000572	R-CHIP;220ohm,5%,1/8W,TP,2012	
JR12	2007-000572	R-CHIP;220ohm,5%,1/8W,TP,2012	
JR14	2007-000572	R-CHIP;220ohm,5%,1/8W,TP,2012	
JR18	2007-000572	R-CHIP;220ohm,5%,1/8W,TP,2012	
JR20	2007-000572	R-CHIP;220ohm,5%,1/8W,TP,2012	
JR22	2007-000572	R-CHIP;220ohm,5%,1/8W,TP,2012	
JR30	2007-000586	R-CHIP;22Kohm,5%,1/8W,TP,2012	
JR17	2007-000682	R-CHIP;3.3Kohm,1%,1/8W,TP,2012	
JR21	2007-000872	R-CHIP;4.7Kohm,5%,1/8W,TP,2012	
JR31	2007-001039	R-CHIP;56Kohm,5%,1/8W,TP,2012	
JR23	2007-001071	R-CHIP;6.8Kohm,5%,1/8W,TP,2012	
JR4	2007-001198	R-CHIP;820ohm,1%,1/8W,TP,2012	
JC2	2203-001537	C-CERAMIC,CHIP;1nF,10%,50V,X7R,TP,2012	
JC1	2203-001537	C-CERAMIC,CHIP;1nF,10%,50V,X7R,TP,2012	
JSW3	3404-000165	SWITCH-TACT;12V,50mA,160gf,6x6mm,SPST	
JSW4	3404-000165	SWITCH-TACT;12V,50mA,160gf,6x6mm,SPST	
JSW5	3404-000165	SWITCH-TACT;12V,50mA,160gf,6x6mm,SPST	
JSW6	3404-000165	SWITCH-TACT;12V,50mA,160gf,6x6mm,SPST	
JSW7	3404-000165	SWITCH-TACT;12V,50mA,160gf,6x6mm,SPST	
JSW8	3404-000165	SWITCH-TACT;12V,50mA,160gf,6x6mm,SPST	
JSW9	3404-000165	SWITCH-TACT;12V,50mA,160gf,6x6mm,SPST	
JSW2	3404-000165	SWITCH-TACT;12V,50mA,160gf,6x6mm,SPST	
JSW1	3404-000165	SWITCH-TACT;12V,50mA,160gf,6x6mm,SPST	
JSW10	3404-000165	SWITCH-TACT;12V,50mA,160gf,6x6mm,SPST	
JSW11	3404-000165	SWITCH-TACT;12V,50mA,160gf,6x6mm,SPST	
JSW12	3404-000165	SWITCH-TACT;12V,50mA,160gf,6x6mm,SPST	
JSW13	3404-000165	SWITCH-TACT;12V,50mA,160gf,6x6mm,SPST	
JSW14	3404-000165	SWITCH-TACT;12V,50mA,160gf,6x6mm,SPST	
JSW15	3404-000165	SWITCH-TACT;12V,50mA,160gf,6x6mm,SPST	
	AH92-01849A	**ASSY PCB-POWER;MAX-KD110,POWER**	
PD2	0402-000157	DIODE-RECTIFIER;1N5402,200V,3A,DO-201AD,	
PD3	0402-000157	DIODE-RECTIFIER;1N5402,200V,3A,DO-201AD,	
PD1	0402-001258	DIODE-BRIDGE;GBU606,600V,6A,SIP-4,BK	
PQ5	0502-000303	TR-POWER;KSD882,NPN,1W,TO-126,TP,160-32	
PIC5	1201-000191	IC-OP AMP;4558,DIP,8P,300MIL,DUAL,20V/mV	
PIC2	1203-001006	IC-VOLTAGE REGULATOR;78R05,TO-220F,4P,-	
PIC3	1203-001586	IC-VOLTAGE REGULATOR;278R33,TO-220F,4P,-	
PIC4	1203-001589	IC-POSI.FIXED REG.;278R05,TO-220F,4P,-,P	
PR10	2003-000710	R-METAL OXIDE(S);47ohm,5%,2W,AA,TP,4x12m	
PR26	2003-000710	R-METAL OXIDE(S);47ohm,5%,2W,AA,TP,4x12m	
PR72	2003-000710	R-METAL OXIDE(S);47ohm,5%,2W,AA,TP,4x12m	
PC5	2401-001633	C-AL;6800uF,20%,25V,GP,BK,18x35.5,7	
PC20	2401-001633	C-AL;6800uF,20%,25V,GP,BK,18x35.5,7	
PC19	2401-001882	C-AL;1000uF,20%,16V,LZ,-,10x20,-	
PC6	2401-001923	C-AL;2200UF,20%,16V,GP,BK,12.5X16,5	
LFU2	3601-000282	FUSE;250V,4A,TIME-LAG,GLASS,5.2x20m	
PCW3	3711-000629	CONNECTOR-HEADER;BOX,11P,2R,2.5MM,STRAIG	
PCW1	3711-000820	CONNECTOR-HEADER;BOX,2P,1R,2.5MM,STRAIGH	
PCW7	3711-000820	CONNECTOR-HEADER;BOX,2P,1R,2.5MM,STRAIGH	
PCW5	3711-000827	CONNECTOR-HEADER;BOX,2P,1R,2mm,STRAIGHT,	
PCW4	3711-003107	CONNECTOR-HEADER;BOX,3P,1R,2.5mm,STRAIGH	
PCW6	AH39-00060A	LEAD CONNECTOR ASSY;-,51015-08,51004-08,	
PCW2	AH39-00096B	LEAD CONNECTOR ASSY;RXD-DV9,#1007,28,AWG	
PD5	0401-000101	DIODE-SWITCHING;1N4148,100V,200mA,DO-35,	
PD4	0401-000101	DIODE-SWITCHING;1N4148,100V,200mA,DO-35,	
PC10	0402-000127	DIODE-RECTIFIER;1N4002,100V,1A,DO-41,TP	
PQ7	0501-000010	TR-SMALL SIGNAL;KSC1008,NPN,800mW,TO-92,	
PQ8	0501-000010	TR-SMALL SIGNAL;KSC1008,NPN,800mW,TO-92,	
PQ6	0501-000303	TR-SMALL SIGNAL;KSA733,PNP,250mW,TO-92,T	
PQ2	0501-000398	TR-SMALL SIGNAL;KSC945,NPN,250mW,TO-92,T	
PQ4	0501-000398	TR-SMALL SIGNAL;KSC945,NPN,250mW,TO-92,T	
PQ3	0501-000610	TR-SMALL SIGNAL;KSA928A-Y,PNP,1W,TO-92L,	
PQ1	0501-000610	TR-SMALL SIGNAL;KSA928A-Y,PNP,1W,TO-92L,	
PR17	2001-000003	R-CARBON;330ohm,5%,1/8W,AA,TP,1.8x3.2mm	
PR11	2001-000010	R-CARBON;68Kohm,5%,1/8W,AA,TP,1.8x3.2mm	
PR8	2001-000273	R-CARBON;100Kohm,5%,1/8W,AA,TP,1.8x3.2m	
PR14	2001-000273	R-CARBON;100Kohm,5%,1/8W,AA,TP,1.8x3.2m	
PR12	2001-000273	R-CARBON;100Kohm,5%,1/8W,AA,TP,1.8x3.2m	
PR22	2001-000290	R-CARBON;10Kohm,5%,1/8W,AA,TP,1.8x3.2mm	
PR19	2001-000290	R-CARBON;10Kohm,5%,1/8W,AA,TP,1.8x3.2mm	
PR18	2001-000290	R-CARBON;10Kohm,5%,1/8W,AA,TP,1.8x3.2mm	
PR15	2001-000290	R-CARBON;10Kohm,5%,1/8W,AA,TP,1.8x3.2mm	
PR13	2001-000290	R-CARBON;10Kohm,5%,1/8W,AA,TP,1.8x3.2mm	
PR3L	2001-000331	R-CARBON;12Kohm,5%,1/8W,AA,TP,1.8x3.2mm	
PR3R	2001-000331	R-CARBON;12Kohm,5%,1/8W,AA,TP,1.8x3.2mm	
PR7	2001-000429	R-CARBON;1Kohm,5%,1/8W,AA,TP,1.8x3.2mm	
PR21	2001-000435	R-CARBON;1Mohm,5%,1/8W,AA,TP,1.8x3.2mm	
PR1L	2001-000449	R-CARBON;2.2Kohm,5%,1/8W,AA,TP,1.8x3.2m	
RR1R	2001-000449	R-CARBON;2.2Kohm,5%,1/8W,AA,TP,1.8x3.2m	

Location no	Code no.	Description Specification	Remarks
PR24	2001-000613	R-CARBON;3.9Kohm,5%,1/8W,AA,TP,1.8x3.2m	
PR23	2001-000613	R-CARBON;3.9Kohm,5%,1/8W,AA,TP,1.8x3.2m	
PR6	2001-000786	R-CARBON;47Kohm,5%,1/8W,AA,TP,1.8x3.2mm	
PR5	2001-000786	R-CARBON;47Kohm,5%,1/8W,AA,TP,1.8x3.2mm	
PR2R	2001-000786	R-CARBON;47Kohm,5%,1/8W,AA,TP,1.8x3.2mm	
PR2L	2001-000786	R-CARBON;47Kohm,5%,1/8W,AA,TP,1.8x3.2mm	
PR20	2001-000802	R-CARBON;5.6Kohm,5%,1/8W,AA,TP,1.8x3.2m	
PR16	2001-000869	R-CARBON;56ohm,5%,1/8W,AA,TP,1.8x3.2mm	
PR9	2001-000977	R-CARBON;8.2KOHM,5%,1/8W,AA,TP,1.8x3.2m	
PR4R	2001-000977	R-CARBON;8.2KOHM,5%,1/8W,AA,TP,1.8x3.2m	
PR4L	2001-000977	R-CARBON;8.2KOHM,5%,1/8W,AA,TP,1.8x3.2m	
GR52	2001-001144	R-CARBON(S);4.7Kohm,5%,1/2W,AA,TP,2.4x6.	
PC2R	2202-000781	C-CERAMIC,MLC-AXIAL;100pF,10%,50V,Y5P,TP	
PC2L	2202-000781	C-CERAMIC,MLC-AXIAL;100pF,10%,50V,Y5P,TP	
PC8	2401-000240	C-AL;100uF,20%,10V,GP,TP,5x11,5	
PC11	2401-000240	C-AL;100uF,20%,10V,GP,TP,5x11,5	
PC14	2401-001364	C-AL;470uF,20%,16V,GP,TP,10x12.5,5	
PC18	2401-001538	C-AL;47uF,20%,25V,GP,TP,5x11mm,5mm	
PC17	2401-001538	C-AL;47uF,20%,25V,GP,TP,5x11mm,5mm	
PC12	2401-001893	C-AL;100uF,20%,16V,GP,6*7.5MM,TP	
PC3R	2401-001954	C-AL;4.7uF,20%,50V,GP,TP,5x11mm,5mm	
PC3L	2401-001954	C-AL;4.7uF,20%,50V,GP,TP,5x11mm,5mm	
PC1R	2401-001954	C-AL;4.7uF,20%,50V,GP,TP,5x11mm,5mm	
PC1L	2401-001954	C-AL;4.7uF,20%,50V,GP,TP,5x11mm,5mm	
PC16	2401-001975	C-AL;47uF,20%,16V,GP,TP,5x11mm,5mm	
PC15	2401-001975	C-AL;47uF,20%,16V,GP,TP,5x11mm,5mm	
PL1	2701-000116	INDUCTOR-AXIAL;10uH,10%,4.2x9.8mm	
PFU1*2	3602-000147	FUSE-CLIP;250V,7.5A,30mohm	

***** MAX-KD120 Parts List *****

	3809-000171	CABLE-FLAT;30V,80C,200mm,16P,1.25mm,UL28	
	3809-001185	CABLE-FLAT;30V,80C,120MM,16P,1.25MM,UL28	
	3809-001222	CABLE-FLAT;30V,80C,50mm,11P,1.25mm,UL289	
	3809-001332	CABLE-FLAT;30V,80C,140MM,16P,1.25MM,UL28	
	3809-001416	CABLE-FLAT;30V,80C,150MM,19P,1.25MM,UL28	
	3809-001450	CABLE-FLAT;30V,80C,150MM,23P,1.25MM,UL28	
	6801-001066	CARD-REGISTRATION;RUSSIA,CIS(RUSSIA),RUS	
	AH26-00259A	TRANS POWER;-,MAX-KD120,-,-,230/254V,-,-	
	AH39-00257F	POWER CORD;MAX980,-,CP2,250V,2.5A,1830MM	
	AH39-00320C	CBF COAXIAL CABLE;MAX-L68,110REC,-,1007#	
	AH39-40001T	CABLE-RCA-VIDEO CABLE,BLK,2000;DP,1P-1P,	
	AH39-50001X	WIRE HARNESS;RING,1007#24,200MM,BLK	
	AH40-00009A	TUNER-PACK ASSY;KST-MB112LS1-30,FM/MW/LW	
	AH42-20001P	ANT LOOP;-,KS971120-01,18.5UH##10%,-	
	AH46-00020A	DISC-KARAOKE;-,-,DVD,MAX-KD100	
	AH59-01049B	**REMOCON-ASSY;MAX-KD120,-,-,-,62KEY,-,-,-**	
	AH59-01198A	**MICROPHONE;-,M-85,-,-,-,-,-,-,-,-,MIC FOR**	
	AH59-01108J	**SPEAKER SYSTEM;PSKD120,-,-,-,-,-,-,-,RUSSI**	
	AH81-00642A	A/S PART-SPK SYSTEM LEFT;PS WB630E,-,-,S	
	AH81-00642B	A/S PART-SPK SYSTEM RIGHT;PS WB630E,-,-,	
	AH81-00642C	A/S PART-FRONT PANEL L;PS WB630E,-,-,FRO	
	AH81-00642D	A/S PART-FRONT PANEL R;PS WB630E,-,-,FRO	
	AH81-00642E	A/S PART-SIDE PANEL;PS WB630E,-,-,SIDE P	
	AH81-00642F	A/S PART-SIDE PANEL R;PS WB630E,-,-,SIDE	
	AH81-00642G	A/S PART-WOOFER RING;PS WB630E,-,-,WOOFE	
	AH81-00642H	A/S PART-GRILLE PUNCHING;PS WB630E,-,-,G	
	AH81-00642J	A/S PART-CABINET ASS'Y L;PS WB630E,-,-,C	
	AH81-00642K	A/S PART-CABINET ASS'Y R;PS WB630E,-,-,C	
	AH81-00642L	A/S PART-UNIT SUB WOOFER;PS WB630E,-,-,U	
	AH81-00642M	A/S PART-UNIT MAIN WOOFER;PS WB630E,-,-,	
	AH81-00642N	A/S PART-UNIT TWEETER;PS WB630E,-,-,UNIT	
	AH81-00642P	A/S PART-CORD ASS'Y MAIN;PS WB630E,-,-,C	
	AH81-00642Q	A/S PART-CORD ASS'Y WOOFER;PS WB630E,-,-	
	AH81-00642R	A/S PART-CUSHION EPS TOP;PS WB630E,-,-,C	
	AH81-00642S	A/S PART-CUSHION EPS BTM;PS WB630E,-,-,C	
	AH81-01318A	A/S PART-CARTON BOX;PSKD120E,SW-1,-,CART	
	AH59-01162A	**DECK;-,MAX-KD100,-,-,-,-,-,-**	
DCN5	3711-003379	CONNECTOR-HEADER;NOWALL,3P,1R,2.5mm,STRA	
	AH92-01831A	**ASSY PCB;MAX-KD100,-**	
RZD1	0403-000352	DIODE-ZENER;UZ4.7BM,4.7V,4.4-5.0V,500mW,	
	0403-000357	DIODE-ZENER;UZ5.6BM,5.6V,5.4-5.8V,500mW,	
DIC1	1003-001418	IC-MOTOR DRIVER;FAN8082,DIP,8P,-,-,1MA,S	
DIC2	1003-001418	IC-MOTOR DRIVER;FAN8082,DIP,8P,-,-,1MA,S	
DXT1	2801-000261	CRYSTAL-UNIT;33.8688MHz,50ppm,28-AAA,12p	
ZX71	2801-003554	CRYSTAL-UNIT;27MHz,10ppm,28-AAM,12pF,40o	
AX1	2801-003716	CRYSTAL-UNIT;9.6MHz,50ppm,28-AAM,20pF,70	
UX1	2801-004256	CRYSTAL-UNIT;33MHZ,30PPM,28-AAE,12 PF,80	OLD PART
UX1	2801-004306	CRYSTAL-UNIT;40MHZ,20PPM,28-AAE,20 PF,80	NEW PART(MP3)
DCN3	3708-000307	CONNECTOR-FPC/FFC/PIC;7P,1.25mm,ANGLE,SN	
ACN21	3708-001195	CONNECTOR-FPC/FFC/PIC;27P,1.25mm,STRAIGH	
RCN1	3708-001464	CONNECTOR-FPC/FFC/PIC;24P,1mm,STRAIGHT,S	
PCN1	3711-000629	CONNECTOR-HEADER;BOX,11P,2R,2.5MM,STRAIG	
VCN2	3711-000827	CONNECTOR-HEADER;BOX,2P,1R,2mm,STRAIGHT,	
TCN2	3711-000907	CONNECTOR-HEADER;BOX,3P,1R,2mm,STRAIGHT,	

Location no	Code no.	Description Specification	Remarks
ACN22	3711-000907	CONNECTOR-HEADER;BOX,3P,1R,2mm,STRAIGHT,	
DCN4	AH39-00367A	LEAD CONNECTOR ASSY;6P,100MM,#1007,-,6P,	
	AH39-50001M	WIRE HARNESS;RING,1007#24,350MM,BLK	
DD1	0407-000116	DIODE-ARRAY;DAP202K,80V,100mA,CK2-3,SOT-	
RD1	0407-000116	DIODE-ARRAY;DAP202K,80V,100mA,CK2-3,SOT-	
VQ1	0501-000314	TR-SMALL SIGNAL;KSA812,PNP,150mW,SOT-23,	
TQ2	0501-000314	TR-SMALL SIGNAL;KSA812,PNP,150mW,SOT-23,	
TQ1	0501-000341	TR-SMALL SIGNAL;KSC1623-L,NPN,200mW,SOT-	
AQ28	0501-000341	TR-SMALL SIGNAL;KSC1623-L,NPN,200mW,SOT-	
AQ27	0501-000341	TR-SMALL SIGNAL;KSC1623-L,NPN,200mW,SOT-	
RQ2	0501-000632	TR-SMALL SIGNAL;2SB1197K,PNP,200mW,SOT-2	
RQ1	0501-000632	TR-SMALL SIGNAL;2SB1197K,PNP,200mW,SOT-2	
AQ25	0504-000152	TR-DIGITAL;KSR2101,PNP,200mW,4.7K/4.7K,S	
TIC2	0801-000008	IC-CMOS LOGIC;74HC245,TRANSCEIVER,SOP,20	
TIC1	0801-000008	IC-CMOS LOGIC;74HC245,TRANSCEIVER,SOP,20	
AIC5	0801-000475	IC-CMOS LOGIC;74HCT157,MUTIPLEXER,SOP,16	
AIC25	0801-000475	IC-CMOS LOGIC;74HCT157,MUTIPLEXER,SOP,16	
FIC3	0801-000508	IC-CMOS LOGIC;74HCT374,D FLIP-FLOP,SOP,2	
FIC6	0801-001042	IC-CMOS LOGIC;74HC157,MULTIPLEXER,SOP,16	
FIC5	0801-001042	IC-CMOS LOGIC;74HC157,MULTIPLEXER,SOP,16	
UIC5	0801-002770	IC-CMOS LOGIC;MC74VHC1GU04,UNBUFFERED IN	
UIC4	0803-000321	IC-TTL;74LS175,D FLIP-FLOP,SOP,16P,15	
TIC3	0803-000898	IC-TTL;74F244,BUFFER/DRIVERS,SOP,20,3	
UIC2	0803-001040	IC-TTL;74LS14,SCHMITT INVERTER,SOP,14	
UIC1	0903-001337	IC-MICROCONTROLLER;AM186EM,16BIT,PQFP,10	OLD PART
UIC1	0903-001331	IC-MICROCONTROLLER;TG2000CMD,16BIT,PQFP,10	NEW PART(MP3)
AIC14	1002-001188	IC-D/A CONVERTER;PCM1716,24BIT,SSOP,28P,	
DIC3	1003-001450	IC-MOTOR DRIVER;BA5954FM,SOP,28P,300MIL,	
FIC7	1105-001300	IC-DRAM;224162,256Kx16Bit,SOJ,40P,400M	
FIC8	1105-001300	IC-DRAM;224162,256Kx16Bit,SOJ,40P,400M	
SIC2	1105-001300	IC-DRAM;224162,256Kx16Bit,SOJ,40P,400M	
FIC1	1105-001375	IC-DRAM;-,4X1MX16BIT,TSOP(II),54P,400M	
MIC2	1107-001203	IC-FLASH MEMORY;49F512,64Kx8Bit,PLCC,32P	
UIC3	1107-001444	IC-FLASH MEMORY;M29F800DT,1024X8BIT,TSOP	
AIC11	1201-000461	IC-OP AMP;4558,SOP,8P,150MIL,DUAL,20V/mV	
RIC1	1201-001790	IC-RF AMP;SP3721A,TQFP,64P,10MIL,SINGLE,	
RIC2	1201-001842	IC-OP AMP;TL3472CD,SO,TP,8P,-,DUAL,-,PAL	
MIC1	1203-001369	IC-VOL. DETECTOR;61AN1902,SOT-23,3P,63MI	
DIC4	1203-002390	IC-POSI.FIXED REG.;NJM7805,TO-252,3P,-,P	
ZIC2	1203-002935	IC-POSI.ADJUST REG.;AIC1117ACE,TO-252,3P	
ZIC3	1204-001919	IC-DECODER;ZIVA4.1 B0,QFP,208P,28X28MM,P	
SIC1	1204-001936	IC-DECODER;M5705,LQFP,176P,24X24MM,PALST	
AIC13	1209-001485	IC-SYNTHESIZER;SAM9773,TQFP,80P,14X14MM,	
PL6	2007-000029	R-CHIP;0ohm,5%,1/8W,TP,2012	
PL5	2007-000029	R-CHIP;0ohm,5%,1/8W,TP,2012	
DL4	2007-000029	R-CHIP;0ohm,5%,1/8W,TP,2012	
RR7	2007-000070	R-CHIP;0ohm,5%,1/10W,TP,1608	
RR6	2007-000070	R-CHIP;0ohm,5%,1/10W,TP,1608	
RR27	2007-000070	R-CHIP;0ohm,5%,1/10W,TP,1608	
RR21	2007-000070	R-CHIP;0ohm,5%,1/10W,TP,1608	
SR13	2007-000070	R-CHIP;0ohm,5%,1/10W,TP,1608	
SR19	2007-000070	R-CHIP;0ohm,5%,1/10W,TP,1608	
UR23	2007-000070	R-CHIP;0ohm,5%,1/10W,TP,1608	
UR42	2007-000070	R-CHIP;0ohm,5%,1/10W,TP,1608	
RR2	2007-000070	R-CHIP;0ohm,5%,1/10W,TP,1608	
DR29	2007-000070	R-CHIP;0ohm,5%,1/10W,TP,1608	
DR43	2007-000070	R-CHIP;0ohm,5%,1/10W,TP,1608	
FR11	2007-000070	R-CHIP;0ohm,5%,1/10W,TP,1608	
FR2	2007-000070	R-CHIP;0ohm,5%,1/10W,TP,1608	
RR11	2007-000070	R-CHIP;0ohm,5%,1/10W,TP,1608	
FR9	2007-000070	R-CHIP;0ohm,5%,1/10W,TP,1608	
FR7	2007-000070	R-CHIP;0ohm,5%,1/10W,TP,1608	
FR5	2007-000070	R-CHIP;0ohm,5%,1/10W,TP,1608	
UR11	2007-000072	R-CHIP;47ohm,5%,1/10W,TP,1608	
FR8	2007-000072	R-CHIP;47ohm,5%,1/10W,TP,1608	
FR6	2007-000072	R-CHIP;47ohm,5%,1/10W,TP,1608	
TR28	2007-000074	R-CHIP;100ohm,5%,1/10W,TP,1608	
AR142	2007-000074	R-CHIP;100ohm,5%,1/10W,TP,1608	
UR36	2007-000075	R-CHIP;220ohm,5%,1/10W,TP,1608	
UR25	2007-000075	R-CHIP;220ohm,5%,1/10W,TP,1608	
UR24	2007-000075	R-CHIP;220ohm,5%,1/10W,TP,1608	
RR32	2007-000075	R-CHIP;220ohm,5%,1/10W,TP,1608	
TR30	2007-000075	R-CHIP;220ohm,5%,1/10W,TP,1608	
UR17	2007-000113	R-CHIP;33ohm,5%,1/10W,TP,1608	OLD PART
UR17	2007-000074	R-CHIP;100ohm,5%,1/10W,TP,1608	NEW PART(MP3)
SR34	2007-000076	R-CHIP;330ohm,5%,1/10W,TP,1608	
SR35	2007-000076	R-CHIP;330ohm,5%,1/10W,TP,1608	
SR36	2007-000076	R-CHIP;330ohm,5%,1/10W,TP,1608	
SR37	2007-000076	R-CHIP;330ohm,5%,1/10W,TP,1608	
SR32	2007-000076	R-CHIP;330ohm,5%,1/10W,TP,1608	
AR101	2007-000076	R-CHIP;330ohm,5%,1/10W,TP,1608	
AR102	2007-000076	R-CHIP;330ohm,5%,1/10W,TP,1608	
AR119	2007-000076	R-CHIP;330ohm,5%,1/10W,TP,1608	
AR120	2007-000076	R-CHIP;330ohm,5%,1/10W,TP,1608	
UR19	2007-000077	R-CHIP;470ohm,5%,1/10W,TP,1608	
MR4	2007-000078	R-CHIP;1Kohm,5%,1/10W,TP,1608	
RR12	2007-000078	R-CHIP;1Kohm,5%,1/10W,TP,1608	
RR3	2007-000078	R-CHIP;1Kohm,5%,1/10W,TP,1608	
SR22	2007-000078	R-CHIP;1Kohm,5%,1/10W,TP,1608	
ZR55	2007-000078	R-CHIP;1Kohm,5%,1/10W,TP,1608	
ZR58	2007-000078	R-CHIP;1Kohm,5%,1/10W,TP,1608	
MR3	2007-000078	R-CHIP;1Kohm,5%,1/10W,TP,1608	
DR14	2007-000078	R-CHIP;1Kohm,5%,1/10W,TP,1608	

Location no	Code no.	Description Specification	Remarks
DR15	2007-000078	R-CHIP;1Kohm,5%,1/10W,TP,1608	
DR3	2007-000078	R-CHIP;1Kohm,5%,1/10W,TP,1608	
DR6	2007-000078	R-CHIP;1Kohm,5%,1/10W,TP,1608	
DR5	2007-000078	R-CHIP;1Kohm,5%,1/10W,TP,1608	
DR4	2007-000078	R-CHIP;1Kohm,5%,1/10W,TP,1608	
SR9	2007-000082	R-CHIP;3.3Kohm,5%,1/10W,TP,1608	
SR17	2007-000082	R-CHIP;3.3Kohm,5%,1/10W,TP,1608	
SR11	2007-000082	R-CHIP;3.3Kohm,5%,1/10W,TP,1608	
SR10	2007-000082	R-CHIP;3.3Kohm,5%,1/10W,TP,1608	
DR21	2007-000082	R-CHIP;3.3Kohm,5%,1/10W,TP,1608	
UR41	2007-000084	R-CHIP;4.7Kohm,5%,1/10W,TP,1608	
UR20	2007-000084	R-CHIP;4.7Kohm,5%,1/10W,TP,1608	
SR5	2007-000084	R-CHIP;4.7Kohm,5%,1/10W,TP,1608	
ZR1	2007-000084	R-CHIP;4.7Kohm,5%,1/10W,TP,1608	
ZR2	2007-000084	R-CHIP;4.7Kohm,5%,1/10W,TP,1608	
ZR56	2007-000084	R-CHIP;4.7Kohm,5%,1/10W,TP,1608	
ZR57	2007-000084	R-CHIP;4.7Kohm,5%,1/10W,TP,1608	
DR7	2007-000084	R-CHIP;4.7Kohm,5%,1/10W,TP,1608	
FR1	2007-000084	R-CHIP;4.7Kohm,5%,1/10W,TP,1608	
FR3	2007-000084	R-CHIP;4.7Kohm,5%,1/10W,TP,1608	
MR2	2007-000084	R-CHIP;4.7Kohm,5%,1/10W,TP,1608	
MR5	2007-000084	R-CHIP;4.7Kohm,5%,1/10W,TP,1608	
SR12	2007-000084	R-CHIP;4.7Kohm,5%,1/10W,TP,1608	
SR18	2007-000084	R-CHIP;4.7Kohm,5%,1/10W,TP,1608	
RR26	2007-000088	R-CHIP;7.5Kohm,5%,1/10W,TP,1608	
R43	2007-000090	R-CHIP;10Kohm,5%,1/10W,TP,1608	
RR15	2007-000090	R-CHIP;10Kohm,5%,1/10W,TP,1608	
RR16	2007-000090	R-CHIP;10Kohm,5%,1/10W,TP,1608	
SR28	2007-000090	R-CHIP;10Kohm,5%,1/10W,TP,1608	
TR22	2007-000090	R-CHIP;10Kohm,5%,1/10W,TP,1608	
UR22	2007-000090	R-CHIP;10Kohm,5%,1/10W,TP,1608	
UR38	2007-000090	R-CHIP;10Kohm,5%,1/10W,TP,1608	
VR1	2007-000090	R-CHIP;10Kohm,5%,1/10W,TP,1608	
DR26	2007-000090	R-CHIP;10Kohm,5%,1/10W,TP,1608	
AR103	2007-000090	R-CHIP;10Kohm,5%,1/10W,TP,1608	
AR104	2007-000090	R-CHIP;10Kohm,5%,1/10W,TP,1608	
AR107	2007-000090	R-CHIP;10Kohm,5%,1/10W,TP,1608	
AR108	2007-000090	R-CHIP;10Kohm,5%,1/10W,TP,1608	
DR25	2007-000090	R-CHIP;10Kohm,5%,1/10W,TP,1608	
DR20	2007-000090	R-CHIP;10Kohm,5%,1/10W,TP,1608	
AR110	2007-000090	R-CHIP;10Kohm,5%,1/10W,TP,1608	
AR109	2007-000090	R-CHIP;10Kohm,5%,1/10W,TP,1608	
DR19	2007-000091	R-CHIP;12Kohm,5%,1/10W,TP,1608	
SR7	2007-000093	R-CHIP;20Kohm,5%,1/10W,TP,1608	
TR2	2007-000094	R-CHIP;22Kohm,5%,1/10W,TP,1608	
TR3	2007-000094	R-CHIP;22Kohm,5%,1/10W,TP,1608	
TR4	2007-000094	R-CHIP;22Kohm,5%,1/10W,TP,1608	
TR8	2007-000094	R-CHIP;22Kohm,5%,1/10W,TP,1608	
TR9	2007-000094	R-CHIP;22Kohm,5%,1/10W,TP,1608	
TR12	2007-000094	R-CHIP;22Kohm,5%,1/10W,TP,1608	
AR131	2007-000094	R-CHIP;22Kohm,5%,1/10W,TP,1608	
MR1	2007-000094	R-CHIP;22Kohm,5%,1/10W,TP,1608	
TR1	2007-000094	R-CHIP;22Kohm,5%,1/10W,TP,1608	
TR10	2007-000094	R-CHIP;22Kohm,5%,1/10W,TP,1608	
TR11	2007-000094	R-CHIP;22Kohm,5%,1/10W,TP,1608	
SR14	2007-000097	R-CHIP;47Kohm,5%,1/10W,TP,1608	
SR27	2007-000097	R-CHIP;47Kohm,5%,1/10W,TP,1608	
UR10	2007-000097	R-CHIP;47Kohm,5%,1/10W,TP,1608	
UR9	2007-000097	R-CHIP;47Kohm,5%,1/10W,TP,1608	
DR28	2007-000097	R-CHIP;47Kohm,5%,1/10W,TP,1608	
DR11	2007-000097	R-CHIP;47Kohm,5%,1/10W,TP,1608	
DR12	2007-000097	R-CHIP;47Kohm,5%,1/10W,TP,1608	
DR13	2007-000097	R-CHIP;47Kohm,5%,1/10W,TP,1608	
DR17	2007-000097	R-CHIP;47Kohm,5%,1/10W,TP,1608	
RR25	2007-000098	R-CHIP;56Kohm,5%,1/10W,TP,1608	
RR28	2007-000107	R-CHIP;470Kohm,5%,1/10W,TP,1608	
ZR71	2007-000109	R-CHIP;1Mohm,5%,1/10W,TP,1608	
UR18	2007-000109	R-CHIP;1Mohm,5%,1/10W,TP,1608	
AR141	2007-000109	R-CHIP;1Mohm,5%,1/10W,TP,1608	
VR28	2007-000113	R-CHIP;33ohm,5%,1/10W,TP,1608	
VR30	2007-000113	R-CHIP;33ohm,5%,1/10W,TP,1608	
VR32	2007-000113	R-CHIP;33ohm,5%,1/10W,TP,1608	
VR34	2007-000113	R-CHIP;33ohm,5%,1/10W,TP,1608	
UR8	2007-000113	R-CHIP;33ohm,5%,1/10W,TP,1608	
UR7	2007-000113	R-CHIP;33ohm,5%,1/10W,TP,1608	
UR6	2007-000113	R-CHIP;33ohm,5%,1/10W,TP,1608	
UR5	2007-000113	R-CHIP;33ohm,5%,1/10W,TP,1608	
ZR51	2007-000113	R-CHIP;33ohm,5%,1/10W,TP,1608	
ZR50	2007-000113	R-CHIP;33ohm,5%,1/10W,TP,1608	
ZR45	2007-000113	R-CHIP;33ohm,5%,1/10W,TP,1608	
ZR44	2007-000113	R-CHIP;33ohm,5%,1/10W,TP,1608	
ZR43	2007-000113	R-CHIP;33ohm,5%,1/10W,TP,1608	
ZR42	2007-000113	R-CHIP;33ohm,5%,1/10W,TP,1608	
ZR38	2007-000113	R-CHIP;33ohm,5%,1/10W,TP,1608	
VR35	2007-000113	R-CHIP;33ohm,5%,1/10W,TP,1608	
UR40	2007-000113	R-CHIP;33ohm,5%,1/10W,TP,1608	
SR15	2007-000113	R-CHIP;33ohm,5%,1/10W,TP,1608	
RR9	2007-000113	R-CHIP;33ohm,5%,1/10W,TP,1608	
RR8	2007-000113	R-CHIP;33ohm,5%,1/10W,TP,1608	
RR5	2007-000113	R-CHIP;33ohm,5%,1/10W,TP,1608	
FR4	2007-000113	R-CHIP;33ohm,5%,1/10W,TP,1608	
FR10	2007-000113	R-CHIP;33ohm,5%,1/10W,TP,1608	
DR18	2007-000113	R-CHIP;33ohm,5%,1/10W,TP,1608	

Location no	Code no.	Description	Specification	Remarks
AR143	2007-000113	R-CHIP;33ohm,5%,1/10W,TP,1608		
UR4	2007-000113	R-CHIP;33ohm,5%,1/10W,TP,1608		
UR39	2007-000113	R-CHIP;33ohm,5%,1/10W,TP,1608		
UR30	2007-000113	R-CHIP;33ohm,5%,1/10W,TP,1608		
UR3	2007-000113	R-CHIP;33ohm,5%,1/10W,TP,1608		
UR1	2007-000113	R-CHIP;33ohm,5%,1/10W,TP,1608		
UR12	2007-000113	R-CHIP;33ohm,5%,1/10W,TP,1608		
UR2	2007-000113	R-CHIP;33ohm,5%,1/10W,TP,1608		
UR21	2007-000113	R-CHIP;33ohm,5%,1/10W,TP,1608		
DR9	2007-000118	R-CHIP;390ohm,5%,1/10W,TP,1608		
DR8	2007-000118	R-CHIP;390ohm,5%,1/10W,TP,1608		
DR10	2007-000118	R-CHIP;390ohm,5%,1/10W,TP,1608		
RR33	2007-000119	R-CHIP;560ohm,5%,1/10W,TP,1608		
ZR54	2007-000122	R-CHIP;1.2Kohm,5%,1/10W,TP,1608		
SR1	2007-000122	R-CHIP;1.2Kohm,5%,1/10W,TP,1608		
RR14	2007-000122	R-CHIP;1.2Kohm,5%,1/10W,TP,1608		
RR13	2007-000122	R-CHIP;1.2Kohm,5%,1/10W,TP,1608		
LR2	2007-000124	R-CHIP;2.2Kohm,5%,1/10W,TP,1608		
LR1	2007-000124	R-CHIP;2.2Kohm,5%,1/10W,TP,1608		
SR3	2007-000131	R-CHIP;91Kohm,5%,1/10W,TP,1608		
SR2	2007-000131	R-CHIP;91Kohm,5%,1/10W,TP,1608		
DR16	2007-000134	R-CHIP;33Kohm,5%,1/10W,TP,1608		
DR27	2007-000134	R-CHIP;33Kohm,5%,1/10W,TP,1608		
RR10	2007-000308	R-CHIP;10ohm,5%,1/8W,TP,2012		
RR1	2007-000308	R-CHIP;10ohm,5%,1/8W,TP,2012		
PR1	2007-000308	R-CHIP;10ohm,5%,1/8W,TP,2012		
VR26	2007-000309	R-CHIP;10ohm,5%,1/10W,TP,1608		
SR23	2007-000309	R-CHIP;10ohm,5%,1/10W,TP,1608		
AR92	2007-000309	R-CHIP;10ohm,5%,1/10W,TP,1608		
AR91	2007-000309	R-CHIP;10ohm,5%,1/10W,TP,1608		
VR2	2007-000402	R-CHIP;150ohm,5%,1/10W,TP,1608		
AR132	2007-000417	R-CHIP;15ohm,5%,1/4W,TP,3216		
DR32	2007-000483	R-CHIP;1ohm,5%,1/8W,TP,2012		
DR31	2007-000483	R-CHIP;1ohm,5%,1/8W,TP,2012		
DR24	2007-000483	R-CHIP;1ohm,5%,1/8W,TP,2012		
DR23	2007-000483	R-CHIP;1ohm,5%,1/8W,TP,2012		
ZR60	2007-000608	R-CHIP;240ohm,5%,1/10W,TP,1608		
ZR59	2007-000608	R-CHIP;240ohm,5%,1/10W,TP,1608		
SR21	2007-000962	R-CHIP;5.1Kohm,1%,1/10W,TP,1608		
SR29	2007-000962	R-CHIP;5.1Kohm,1%,1/10W,TP,1608		
SR8	2007-001010	R-CHIP;51Kohm,5%,1/10W,TP,1608		
AR122	2007-001010	R-CHIP;51Kohm,5%,1/10W,TP,1608		
AR121	2007-001010	R-CHIP;51Kohm,5%,1/10W,TP,1608		
UR16	2007-001134	R-CHIP;68ohm,5%,1/10W,TP,1608		
UR28	2007-001134	R-CHIP;68ohm,5%,1/10W,TP,1608		
UR29	2007-001134	R-CHIP;68ohm,5%,1/10W,TP,1608		
UR31	2007-001134	R-CHIP;68ohm,5%,1/10W,TP,1608		
VR3	2007-001134	R-CHIP;68ohm,5%,1/10W,TP,1608		
FR12	2007-001134	R-CHIP;68ohm,5%,1/10W,TP,1608		
FR13	2007-001134	R-CHIP;68ohm,5%,1/10W,TP,1608		
UR13	2007-001134	R-CHIP;68ohm,5%,1/10W,TP,1608		
UR14	2007-001134	R-CHIP;68ohm,5%,1/10W,TP,1608		
UR15	2007-001134	R-CHIP;68ohm,5%,1/10W,TP,1608		
ZR46	2007-001167	R-CHIP;75ohm,5%,1/10W,TP,1608		
RR4	2007-001179	R-CHIP;8.2Kohm,5%,1/10W,TP,1608		
RR30	2007-001179	R-CHIP;8.2Kohm,5%,1/10W,TP,1608		
RN7	2011-000475	R-NETWORK;33OHM,5%,1/16W,L,CHIP,8P,TP,32		
RN8	2011-000475	R-NETWORK;33OHM,5%,1/16W,L,CHIP,8P,TP,32		
RN9	2011-000475	R-NETWORK;33OHM,5%,1/16W,L,CHIP,8P,TP,32		
SN1	2011-000475	R-NETWORK;33OHM,5%,1/16W,L,CHIP,8P,TP,32		
TN3	2011-000475	R-NETWORK;33OHM,5%,1/16W,L,CHIP,8P,TP,32		
TN5	2011-000475	R-NETWORK;33OHM,5%,1/16W,L,CHIP,8P,TP,32		
RN1	2011-000475	R-NETWORK;33OHM,5%,1/16W,L,CHIP,8P,TP,32		
RN2	2011-000475	R-NETWORK;33OHM,5%,1/16W,L,CHIP,8P,TP,32		
RN3	2011-000475	R-NETWORK;33OHM,5%,1/16W,L,CHIP,8P,TP,32		
RN4	2011-000475	R-NETWORK;33OHM,5%,1/16W,L,CHIP,8P,TP,32		
RN5	2011-000475	R-NETWORK;33OHM,5%,1/16W,L,CHIP,8P,TP,32		
RN6	2011-000475	R-NETWORK;33OHM,5%,1/16W,L,CHIP,8P,TP,32		
TN4	2011-000585	R-NETWORK;47OHM,5%,1/16W,L,CHIP,8P,TP		
TN13	2011-000816	R-NETWORK;100OHM,5%,1/16W,L,CHIP,8P,TP		
TN12	2011-000816	R-NETWORK;100OHM,5%,1/16W,L,CHIP,8P,TP		
TN11	2011-000816	R-NETWORK;100OHM,5%,1/16W,L,CHIP,8P,TP		
TN10	2011-000816	R-NETWORK;100OHM,5%,1/16W,L,CHIP,8P,TP		
TN7	2011-001011	R-NETWORK;10KOHM,5%,1/16W,L,CHIP,8P,TP		
TN8	2011-001011	R-NETWORK;10KOHM,5%,1/16W,L,CHIP,8P,TP		
TN9	2011-001011	R-NETWORK;10KOHM,5%,1/16W,L,CHIP,8P,TP		
TN6	2011-001011	R-NETWORK;10KOHM,5%,1/16W,L,CHIP,8P,TP		
TN2	2011-001011	R-NETWORK;10KOHM,5%,1/16W,L,CHIP,8P,TP		
TN1	2011-001011	R-NETWORK;10KOHM,5%,1/16W,L,CHIP,8P,TP		
AC108	2203-000140	C-CERAMIC,CHIP;1.5nF,10%,50V,X7R,TP,1608		
AC107	2203-000140	C-CERAMIC,CHIP;1.5nF,10%,50V,X7R,TP,1608		
AC120	2203-000236	C-CERAMIC,CHIP;0.1NF,5%,50V,C0G,TP,1608		
DC16	2203-000236	C-CERAMIC,CHIP;0.1NF,5%,50V,C0G,TP,1608		
DC9	2203-000236	C-CERAMIC,CHIP;0.1NF,5%,50V,C0G,TP,1608		
RC21	2203-000236	C-CERAMIC,CHIP;0.1NF,5%,50V,C0G,TP,1608		
AC119	2203-000236	C-CERAMIC,CHIP;0.1NF,5%,50V,C0G,TP,1608		
AC105	2203-000236	C-CERAMIC,CHIP;0.1NF,5%,50V,C0G,TP,1608		
AC106	2203-000236	C-CERAMIC,CHIP;0.1NF,5%,50V,C0G,TP,1608		
AC113	2203-000236	C-CERAMIC,CHIP;0.1NF,5%,50V,C0G,TP,1608		
AC114	2203-000236	C-CERAMIC,CHIP;0.1NF,5%,50V,C0G,TP,1608		
DC5	2203-000257	C-CERAMIC,CHIP;10nF,10%,50V,X7R,TP,1608		
AC139	2203-000257	C-CERAMIC,CHIP;10nF,10%,50V,X7R,TP,1608		
TC14	2203-000280	C-CERAMIC,CHIP;0.01NF,0.5PF,50V,C0G,TP,1		

Location no	Code no.	Description	Specification	Remarks
TC15	2203-000280	C-CERAMIC,CHIP;0.01NF,0.5PF,50V,C0G,TP,1		
TC16	2203-000280	C-CERAMIC,CHIP;0.01NF,0.5PF,50V,C0G,TP,1		
VC3	2203-000280	C-CERAMIC,CHIP;0.01NF,0.5PF,50V,C0G,TP,1		
VC5	2203-000280	C-CERAMIC,CHIP;0.01NF,0.5PF,50V,C0G,TP,1		
FC10	2203-000280	C-CERAMIC,CHIP;0.01NF,0.5PF,50V,C0G,TP,1		
FC9	2203-000280	C-CERAMIC,CHIP;0.01NF,0.5PF,50V,C0G,TP,1		
TC11	2203-000280	C-CERAMIC,CHIP;0.01NF,0.5PF,50V,C0G,TP,1		
TC12	2203-000280	C-CERAMIC,CHIP;0.01NF,0.5PF,50V,C0G,TP,1		
TC13	2203-000280	C-CERAMIC,CHIP;0.01NF,0.5PF,50V,C0G,TP,1		
UC3	2203-000384	C-CERAMIC,CHIP;0.015NF,5%,50V,C0G,TP,160		
UC2	2203-000426	C-CERAMIC,CHIP;0.018NF,5%,50V,C0G,TP,160		
UC1	2203-000440	C-CERAMIC,CHIP;1nF,10%,50V,X7R,TP,1608,-		
SC20	2203-000440	C-CERAMIC,CHIP;1nF,10%,50V,X7R,TP,1608,-		
SC19	2203-000440	C-CERAMIC,CHIP;1nF,10%,50V,X7R,TP,1608,-		
SC11	2203-000440	C-CERAMIC,CHIP;1nF,10%,50V,X7R,TP,1608,-		
RC26	2203-000440	C-CERAMIC,CHIP;1nF,10%,50V,X7R,TP,1608,-		
RC22	2203-000440	C-CERAMIC,CHIP;1nF,10%,50V,X7R,TP,1608,-		
RC10	2203-000440	C-CERAMIC,CHIP;1nF,10%,50V,X7R,TP,1608,-		
AC140	2203-000491	C-CERAMIC,CHIP;2.2nF,10%,50V,X7R,TP,1608		
AC141	2203-000626	C-CERAMIC,CHIP;0.022NF,5%,50V,C0G,TP,160		
AC142	2203-000626	C-CERAMIC,CHIP;0.022NF,5%,50V,C0G,TP,160		
AC104	2203-000783	C-CERAMIC,CHIP;0.33NF,5%,50V,C0G,TP,1608		
AC103	2203-000783	C-CERAMIC,CHIP;0.33NF,5%,50V,C0G,TP,1608		
DC10	2203-000888	C-CERAMIC,CHIP;4.7nF,10%,50V,X7R,TP,1608		
SC14	2203-000972	C-CERAMIC,CHIP;47nF,10%,16V,X7R,TP,1608		
SC1	2203-000972	C-CERAMIC,CHIP;47nF,10%,16V,X7R,TP,1608		
RC17	2203-000972	C-CERAMIC,CHIP;47nF,10%,16V,X7R,TP,1608		
SC28	2203-000998	C-CERAMIC,CHIP;0.047NF,5%,50V,C0G,TP,160		
SC6	2203-000998	C-CERAMIC,CHIP;0.047NF,5%,50V,C0G,TP,160		
SC2	2203-001052	C-CERAMIC,CHIP;0.56nF,10%,50V,X7R,TP,160		
RC46	2203-001071	C-CERAMIC,CHIP;0.056NF,5%,50V,C0G,TP,160		
RC47	2203-001071	C-CERAMIC,CHIP;0.056NF,5%,50V,C0G,TP,160		
SC12	2203-001103	C-CERAMIC,CHIP;6.8nF,10%,50V,X7R,TP,1608		
VC4	2203-001126	C-CERAMIC,CHIP;0.68nF,10%,50V,X7R,TP,160		
RC9	2203-001126	C-CERAMIC,CHIP;0.68nF,10%,50V,X7R,TP,160		
RC19	2203-001126	C-CERAMIC,CHIP;0.68nF,10%,50V,X7R,TP,160		
RC18	2203-001126	C-CERAMIC,CHIP;0.68nF,10%,50V,X7R,TP,160		
RC15	2203-001126	C-CERAMIC,CHIP;0.68nF,10%,50V,X7R,TP,160		
RC13	2203-001126	C-CERAMIC,CHIP;0.68nF,10%,50V,X7R,TP,160		
SC35	2203-001573	C-CERAMIC,CHIP;0.012nF,5%,50V,NP0,TP,160		
SC29	2203-001573	C-CERAMIC,CHIP;0.012nF,5%,50V,NP0,TP,160		
ZC72	2203-001628	C-CERAMIC,CHIP;0.03nF,5%,50V,NP0,TP,1608		
ZC71	2203-001628	C-CERAMIC,CHIP;0.03nF,5%,50V,NP0,TP,1608		
RC39	2203-001636	C-CERAMIC,CHIP;0.033nF,5%,50V,NP0,TP,160		
RC16	2203-001636	C-CERAMIC,CHIP;0.033nF,5%,50V,NP0,TP,160		
RC14	2203-001636	C-CERAMIC,CHIP;0.033nF,5%,50V,NP0,TP,160		
RC12	2203-001636	C-CERAMIC,CHIP;0.033nF,5%,50V,NP0,TP,160		
VC6	2203-001640	C-CERAMIC,CHIP;0.39nF,10%,50V,X7R,TP,160		
VC2	2203-001640	C-CERAMIC,CHIP;0.39nF,10%,50V,X7R,TP,160		
	2203-001652	C-CERAMIC,CHIP;470nF,+80-20%,16V,Y5V,TP,		
SC16	2203-001656	C-CERAMIC,CHIP;0.47nF,5%,50V,NP0,TP,1608		
SC15	2203-001656	C-CERAMIC,CHIP;0.47nF,5%,50V,NP0,TP,1608		
SC38	2203-005005	C-CERAMIC,CHIP;100nF,10%,16V,X7R,TP,1608		
SC37	2203-005005	C-CERAMIC,CHIP;100nF,10%,16V,X7R,TP,1608		
SC34	2203-005005	C-CERAMIC,CHIP;100nF,10%,16V,X7R,TP,1608		
SC33	2203-005005	C-CERAMIC,CHIP;100nF,10%,16V,X7R,TP,1608		
SC32	2203-005005	C-CERAMIC,CHIP;100nF,10%,16V,X7R,TP,1608		
SC31	2203-005005	C-CERAMIC,CHIP;100nF,10%,16V,X7R,TP,1608		
SC39	2203-005005	C-CERAMIC,CHIP;100nF,10%,16V,X7R,TP,1608		
TC20	2203-005005	C-CERAMIC,CHIP;100nF,10%,16V,X7R,TP,1608		
SC9	2203-005005	C-CERAMIC,CHIP;100nF,10%,16V,X7R,TP,1608		
SC8	2203-005005	C-CERAMIC,CHIP;100nF,10%,16V,X7R,TP,1608		
SC5	2203-005005	C-CERAMIC,CHIP;100nF,10%,16V,X7R,TP,1608		
SC40	2203-005005	C-CERAMIC,CHIP;100nF,10%,16V,X7R,TP,1608		
SC4	2203-005005	C-CERAMIC,CHIP;100nF,10%,16V,X7R,TP,1608		
SC18	2203-005005	C-CERAMIC,CHIP;100nF,10%,16V,X7R,TP,1608		
SC17	2203-005005	C-CERAMIC,CHIP;100nF,10%,16V,X7R,TP,1608		
RC8	2203-005005	C-CERAMIC,CHIP;100nF,10%,16V,X7R,TP,1608		
RC44	2203-005005	C-CERAMIC,CHIP;100nF,10%,16V,X7R,TP,1608		
RC43	2203-005005	C-CERAMIC,CHIP;100nF,10%,16V,X7R,TP,1608		
RC41	2203-005005	C-CERAMIC,CHIP;100nF,10%,16V,X7R,TP,1608		
SC21	2203-005005	C-CERAMIC,CHIP;100nF,10%,16V,X7R,TP,1608		
SC27	2203-005005	C-CERAMIC,CHIP;100nF,10%,16V,X7R,TP,1608		
SC26	2203-005005	C-CERAMIC,CHIP;100nF,10%,16V,X7R,TP,1608		
SC25	2203-005005	C-CERAMIC,CHIP;100nF,10%,16V,X7R,TP,1608		
SC24	2203-005005	C-CERAMIC,CHIP;100nF,10%,16V,X7R,TP,1608		
SC23	2203-005005	C-CERAMIC,CHIP;100nF,10%,16V,X7R,TP,1608		
SC22	2203-005005	C-CERAMIC,CHIP;100nF,10%,16V,X7R,TP,1608		
TC21	2203-005005	C-CERAMIC,CHIP;100nF,10%,16V,X7R,TP,1608		
ZC4	2203-005005	C-CERAMIC,CHIP;100nF,10%,16V,X7R,TP,1608		
ZC10	2203-005005	C-CERAMIC,CHIP;100nF,10%,16V,X7R,TP,1608		
UC9	2203-005005	C-CERAMIC,CHIP;100nF,10%,16V,X7R,TP,1608		
UC7	2203-005005	C-CERAMIC,CHIP;100nF,10%,16V,X7R,TP,1608		
UC5	2203-005005	C-CERAMIC,CHIP;100nF,10%,16V,X7R,TP,1608		
UC4	2203-005005	C-CERAMIC,CHIP;100nF,10%,16V,X7R,TP,1608		
ZC5	2203-005005	C-CERAMIC,CHIP;100nF,10%,16V,X7R,TP,1608		
ZC8	2203-005005	C-CERAMIC,CHIP;100nF,10%,16V,X7R,TP,1608		
ZC76	2203-005005	C-CERAMIC,CHIP;100nF,10%,16V,X7R,TP,1608		
ZC75	2203-005005	C-CERAMIC,CHIP;100nF,10%,16V,X7R,TP,1608		
ZC74	2203-005005	C-CERAMIC,CHIP;100nF,10%,16V,X7R,TP,1608		
ZC73	2203-005005	C-CERAMIC,CHIP;100nF,10%,16V,X7R,TP,1608		
ZC7	2203-005005	C-CERAMIC,CHIP;100nF,10%,16V,X7R,TP,1608		
TC7	2203-005005	C-CERAMIC,CHIP;100nF,10%,16V,X7R,TP,1608		

Location no	Code no.	Description Specification	Remarks
TC6	2203-005005	C-CERAMIC,CHIP;100nF,10%,16V,X7R,TP,1608	
TC5	2203-005005	C-CERAMIC,CHIP;100nF,10%,16V,X7R,TP,1608	
TC4	2203-005005	C-CERAMIC,CHIP;100nF,10%,16V,X7R,TP,1608	
TC3	2203-005005	C-CERAMIC,CHIP;100nF,10%,16V,X7R,TP,1608	
TC22	2203-005005	C-CERAMIC,CHIP;100nF,10%,16V,X7R,TP,1608	
UC10	2203-005005	C-CERAMIC,CHIP;100nF,10%,16V,X7R,TP,1608	
UC17	2203-005005	C-CERAMIC,CHIP;100nF,10%,16V,X7R,TP,1608	
UC16	2203-005005	C-CERAMIC,CHIP;100nF,10%,16V,X7R,TP,1608	
UC15	2203-005005	C-CERAMIC,CHIP;100nF,10%,16V,X7R,TP,1608	
UC14	2203-005005	C-CERAMIC,CHIP;100nF,10%,16V,X7R,TP,1608	
UC12	2203-005005	C-CERAMIC,CHIP;100nF,10%,16V,X7R,TP,1608	
UC11	2203-005005	C-CERAMIC,CHIP;100nF,10%,16V,X7R,TP,1608	
RC40	2203-005005	C-CERAMIC,CHIP;100nF,10%,16V,X7R,TP,1608	
DC22	2203-005005	C-CERAMIC,CHIP;100nF,10%,16V,X7R,TP,1608	
DC2	2203-005005	C-CERAMIC,CHIP;100nF,10%,16V,X7R,TP,1608	
DC15	2203-005005	C-CERAMIC,CHIP;100nF,10%,16V,X7R,TP,1608	
DC14	2203-005005	C-CERAMIC,CHIP;100nF,10%,16V,X7R,TP,1608	
DC13	2203-005005	C-CERAMIC,CHIP;100nF,10%,16V,X7R,TP,1608	
DC11	2203-005005	C-CERAMIC,CHIP;100nF,10%,16V,X7R,TP,1608	
DC3	2203-005005	C-CERAMIC,CHIP;100nF,10%,16V,X7R,TP,1608	
FC18	2203-005005	C-CERAMIC,CHIP;100nF,10%,16V,X7R,TP,1608	
FC17	2203-005005	C-CERAMIC,CHIP;100nF,10%,16V,X7R,TP,1608	
FC16	2203-005005	C-CERAMIC,CHIP;100nF,10%,16V,X7R,TP,1608	
FC15	2203-005005	C-CERAMIC,CHIP;100nF,10%,16V,X7R,TP,1608	
FC14	2203-005005	C-CERAMIC,CHIP;100nF,10%,16V,X7R,TP,1608	
DC8	2203-005005	C-CERAMIC,CHIP;100nF,10%,16V,X7R,TP,1608	
AC136	2203-005005	C-CERAMIC,CHIP;100nF,10%,16V,X7R,TP,1608	
AC134	2203-005005	C-CERAMIC,CHIP;100nF,10%,16V,X7R,TP,1608	
AC133	2203-005005	C-CERAMIC,CHIP;100nF,10%,16V,X7R,TP,1608	
AC132	2203-005005	C-CERAMIC,CHIP;100nF,10%,16V,X7R,TP,1608	
AC118	2203-005005	C-CERAMIC,CHIP;100nF,10%,16V,X7R,TP,1608	
AC117	2203-005005	C-CERAMIC,CHIP;100nF,10%,16V,X7R,TP,1608	
AC137	2203-005005	C-CERAMIC,CHIP;100nF,10%,16V,X7R,TP,1608	
DC1	2203-005005	C-CERAMIC,CHIP;100nF,10%,16V,X7R,TP,1608	
AC92	2203-005005	C-CERAMIC,CHIP;100nF,10%,16V,X7R,TP,1608	
AC91	2203-005005	C-CERAMIC,CHIP;100nF,10%,16V,X7R,TP,1608	
AC24	2203-005005	C-CERAMIC,CHIP;100nF,10%,16V,X7R,TP,1608	
AC18	2203-005005	C-CERAMIC,CHIP;100nF,10%,16V,X7R,TP,1608	
AC138	2203-005005	C-CERAMIC,CHIP;100nF,10%,16V,X7R,TP,1608	
FC19	2203-005005	C-CERAMIC,CHIP;100nF,10%,16V,X7R,TP,1608	
RC28	2203-005005	C-CERAMIC,CHIP;100nF,10%,16V,X7R,TP,1608	
RC23	2203-005005	C-CERAMIC,CHIP;100nF,10%,16V,X7R,TP,1608	
RC2	2203-005005	C-CERAMIC,CHIP;100nF,10%,16V,X7R,TP,1608	
RC11	2203-005005	C-CERAMIC,CHIP;100nF,10%,16V,X7R,TP,1608	
RC1	2203-005005	C-CERAMIC,CHIP;100nF,10%,16V,X7R,TP,1608	
PC9	2203-005005	C-CERAMIC,CHIP;100nF,10%,16V,X7R,TP,1608	
RC29	2203-005005	C-CERAMIC,CHIP;100nF,10%,16V,X7R,TP,1608	
RC4	2203-005005	C-CERAMIC,CHIP;100nF,10%,16V,X7R,TP,1608	
RC36	2203-005005	C-CERAMIC,CHIP;100nF,10%,16V,X7R,TP,1608	
RC35	2203-005005	C-CERAMIC,CHIP;100nF,10%,16V,X7R,TP,1608	
RC31	2203-005005	C-CERAMIC,CHIP;100nF,10%,16V,X7R,TP,1608	
RC30	2203-005005	C-CERAMIC,CHIP;100nF,10%,16V,X7R,TP,1608	
RC3	2203-005005	C-CERAMIC,CHIP;100nF,10%,16V,X7R,TP,1608	
LC2	2203-005005	C-CERAMIC,CHIP;100nF,10%,16V,X7R,TP,1608	
LC1	2203-005005	C-CERAMIC,CHIP;100nF,10%,16V,X7R,TP,1608	
FC8	2203-005005	C-CERAMIC,CHIP;100nF,10%,16V,X7R,TP,1608	
FC6	2203-005005	C-CERAMIC,CHIP;100nF,10%,16V,X7R,TP,1608	
FC5	2203-005005	C-CERAMIC,CHIP;100nF,10%,16V,X7R,TP,1608	
FC22	2203-005005	C-CERAMIC,CHIP;100nF,10%,16V,X7R,TP,1608	
LC3	2203-005005	C-CERAMIC,CHIP;100nF,10%,16V,X7R,TP,1608	
PC8	2203-005005	C-CERAMIC,CHIP;100nF,10%,16V,X7R,TP,1608	
PC14	2203-005005	C-CERAMIC,CHIP;100nF,10%,16V,X7R,TP,1608	
MC56	2203-005005	C-CERAMIC,CHIP;100nF,10%,16V,X7R,TP,1608	
MC55	2203-005005	C-CERAMIC,CHIP;100nF,10%,16V,X7R,TP,1608	
MC3	2203-005005	C-CERAMIC,CHIP;100nF,10%,16V,X7R,TP,1608	
MC2	2203-005005	C-CERAMIC,CHIP;100nF,10%,16V,X7R,TP,1608	
MC1	2203-005065	C-CERAMIC,CHIP;1000nF,+80-20%,10V,Y5V,TP	
RC7	2401-000240	C-AL;100uF,20%,10V,GP,TP,5x11,5	
RC20	2401-000240	C-AL;100uF,20%,10V,GP,TP,5x11,5	
PC13	2401-000240	C-AL;100uF,20%,10V,GP,TP,5x11,5	
PC10	2401-000240	C-AL;100uF,20%,10V,GP,TP,5x11,5	
AC116	2401-000438	C-AL;10UF,20%,25V,GP,-,5X11,5	
AC115	2401-000438	C-AL;10UF,20%,25V,GP,-,5X11,5	
AC102	2401-000438	C-AL;10UF,20%,25V,GP,-,5X11,5	
AC101	2401-000438	C-AL;10UF,20%,25V,GP,-,5X11,5	
ZC9	2401-000778	C-AL;220uF,20%,10V,GP,6.3x11,5MM,TP	
SC3	2401-000778	C-AL;220uF,20%,10V,GP,6.3x11,5MM,TP	
AC17	2401-000830	C-AL;220uF,20%,25V,GP,TP,8x11.5,5	
VC1	2401-001355	C-AL;470uF,20%,10V,GP,TP,8x11.5mm,5	
UC6	2401-001355	C-AL;470uF,20%,10V,GP,TP,8x11.5mm,5	
PC11	2401-001364	C-AL;470uF,20%,16V,GP,TP,10x12.5,5	
TC8	2401-001893	C-AL;100uF,20%,16V,GP,6*7,5MM,TP	
TC2	2401-001893	C-AL;100uF,20%,16V,GP,6*7,5MM,TP	
JC13	2401-001893	C-AL;100uF,20%,16V,GP,6*7,5MM,TP	
FC7	2401-001893	C-AL;100uF,20%,16V,GP,6*7,5MM,TP	
FC21	2401-001893	C-AL;100uF,20%,16V,GP,6*7,5MM,TP	
UC8	2401-001893	C-AL;100uF,20%,16V,GP,6*7,5MM,TP	
ZC6	2401-001893	C-AL;100uF,20%,16V,GP,6*7,5MM,TP	
ZC3	2401-001893	C-AL;100uF,20%,16V,GP,6*7,5MM,TP	
ZC2	2401-001893	C-AL;100uF,20%,16V,GP,6*7,5MM,TP	
ZC14	2401-001893	C-AL;100uF,20%,16V,GP,6*7,5MM,TP	
ZC1	2401-001893	C-AL;100uF,20%,16V,GP,6*7,5MM,TP	
FC20	2401-001893	C-AL;100uF,20%,16V,GP,6*7,5MM,TP	

Location no	Code no.	Description Specification	Remarks
AC94	2401-001893	C-AL;100uF,20%,16V,GP,6*7,5MM,TP	
AC93	2401-001893	C-AL;100uF,20%,16V,GP,6*7,5MM,TP	
AC135	2401-001893	C-AL;100uF,20%,16V,GP,6*7,5MM,TP	
AC131	2401-001893	C-AL;100uF,20%,16V,GP,6*7,5MM,TP	
AC110	2401-001893	C-AL;100uF,20%,16V,GP,6*7,5MM,TP	
DC12	2401-001893	C-AL;100uF,20%,16V,GP,6*7,5MM,TP	
FC13	2401-001893	C-AL;100uF,20%,16V,GP,6*7,5MM,TP	
FC12	2401-001893	C-AL;100uF,20%,16V,GP,6*7,5MM,TP	
FC11	2401-001893	C-AL;100uF,20%,16V,GP,6*7,5MM,TP	
DC4	2401-001893	C-AL;100uF,20%,16V,GP,6*7,5MM,TP	
DC21	2401-001893	C-AL;100uF,20%,16V,GP,6*7,5MM,TP	
RC37	2401-001975	C-AL;47uF,20%,16V,GP,TP,5x11mm,5mm	
RC45	2401-001975	C-AL;47uF,20%,16V,GP,TP,5x11mm,5mm	
UC13	2401-001975	C-AL;47uF,20%,16V,GP,TP,5x11mm,5mm	
RC34	2401-001975	C-AL;47uF,20%,16V,GP,TP,5x11mm,5mm	
AC23	2401-001975	C-AL;47uF,20%,16V,GP,TP,5x11mm,5mm	
AC112	2401-001975	C-AL;47uF,20%,16V,GP,TP,5x11mm,5mm	
AC111	2401-001975	C-AL;47uF,20%,16V,GP,TP,5x11mm,5mm	
VL2	2703-000274	INDUCTOR-SMD;2.2uH,10%,1.25x2x0.85mm	
VL1	2703-000274	INDUCTOR-SMD;2.2uH,10%,1.25x2x0.85mm	
UL1	2703-001254	INDUCTOR-SMD;1.8uH,10%,2x1.25x0.85mm	
RL2	3301-001069	BEAD-SMD;AB,1.6x0.8x0.8mm,-,-	
RL1	3301-001069	BEAD-SMD;AB,1.6x0.8x0.8mm,-,-	
AL21	3301-001069	BEAD-SMD;AB,1.6x0.8x0.8mm,-,-	
PL3	3301-001495	BEAD-SMD;AB,120OHM,2.0X1.2X0.9MM,2500MA	
PL7	3301-001495	BEAD-SMD;AB,120OHM,2.0X1.2X0.9MM,2500MA	
PL9	3301-001495	BEAD-SMD;AB,120OHM,2.0X1.2X0.9MM,2500MA	
ZL1	3301-001495	BEAD-SMD;AB,120OHM,2.0X1.2X0.9MM,2500MA	
ZL71	3301-001495	BEAD-SMD;AB,120OHM,2.0X1.2X0.9MM,2500MA	
ZL72	3301-001495	BEAD-SMD;AB,120OHM,2.0X1.2X0.9MM,2500MA	
ZL73	3301-001495	BEAD-SMD;AB,120OHM,2.0X1.2X0.9MM,2500MA	
AL1	3301-001495	BEAD-SMD;AB,120OHM,2.0X1.2X0.9MM,2500MA	
AL2	3301-001495	BEAD-SMD;AB,120OHM,2.0X1.2X0.9MM,2500MA	
DL1	3301-001495	BEAD-SMD;AB,120OHM,2.0X1.2X0.9MM,2500MA	
DL2	3301-001495	BEAD-SMD;AB,120OHM,2.0X1.2X0.9MM,2500MA	
DL5	3301-001495	BEAD-SMD;AB,120OHM,2.0X1.2X0.9MM,2500MA	
DL6	3301-001495	BEAD-SMD;AB,120OHM,2.0X1.2X0.9MM,2500MA	
PL10	3301-001495	BEAD-SMD;AB,120OHM,2.0X1.2X0.9MM,2500MA	
FIC4	AH09-00093A	IC MICOM;ATF1500A,PLCC,-,17.7*	OLD PART
FIC4	1301-001661	IC MICOM;ATF1502AS,PLCC	NEW PART(MP3)
FIC2	AH11-00099A	MASK ROM;MX23C3210,MAX-KD100,32M,-,SOP,	
ZIC1	AH14-10004R	IC;M74HCU04,SOP,TAPE 14P	
	AH97-00840A	**ASSY DVD DECK;-,CMS-D300,MX-DVA5**	
	3710-000544	CONNECTOR-SOCKET;3P,1R,2.5MM,STRAIGHT,SN	
	3711-003379	CONNECTOR-HEADER;NOWALL,3P,1R,2.5mm,STRA	
	3809-001299	CABLE-FLAT;30V,80C,190MM,24P,1MM,UL20696	
	3809-001300	CABLE-FLAT;30V,80C,180MM,7P,1.25MM,UL289	
	AH97-00900B	**ASSY-DECK CDP;-,MXDVA5,ASSY DECK CDP**	
	3405-000101	SWITCH-MICRO;1.6V,1A,70gf,SPST	
	3711-000826	CONNECTOR-HEADER;BOX,2P,1R,2mm,ANGLE,SN	
	AH92-01855A	**ASSY PCB-FRONT;MAX-KD120,FRONT**	
	0601-001490	LED;INVERTER,BLUE,3MM,465-477NM	
UIC4	0904-001621	IC-I/O CONTROLLER;PT8300,16BIT,SOP,28P,3	
UIC3	0904-001621	IC-I/O CONTROLLER;PT8300,16BIT,SOP,28P,3	
UIC2	0904-001621	IC-I/O CONTROLLER;PT8300,16BIT,SOP,28P,3	
MIC1	1201-001572	IC-PREAMP;2011,SIP,7P,17MIL,SINGLE,47,PL	
UIC5	1204-002110	IC-SOUND PROCESSOR;NJM2072D,DIP,8P,-,PLA	
UR106	2003-000616	R-METAL OXIDE(S);27ohm,5%,2W,AA,TP,4x12m	
MVR1	2101-001052	VR-ROTARY;10KOHM,10%,0.05W,TOP	
UX2	2801-001394	CRYSTAL-UNIT;32.768KHz,20ppm,28-AAY,12.5	
UX1	2802-001174	RESONATOR-CERAMIC;10MHZ,0.5%,BK,8X3.5X3M	
UVR1	3406-001047	SWITCH-ROTARY;5V DC,0.5mA,-,12mm	
UVR2	3406-001050	SWITCH-ROTARY;5V DC,0.5mA,click,12mm	
UVR3	3406-001050	SWITCH-ROTARY;5V DC,0.5mA,click,12mm	
UCW5	3708-000451	CONNECTOR-FPC/FFC/PIC;16P,1.25mm,STRAIGH	
UCW2	3708-000451	CONNECTOR-FPC/FFC/PIC;16P,1.25mm,STRAIGH	
UCW1	3708-000451	CONNECTOR-FPC/FFC/PIC;16P,1.25mm,STRAIGH	
UCW4	3708-000452	CONNECTOR-FPC/FFC/PIC;19P,1.25mm,STRAIGH	
UCW6	3708-001212	CONNECTOR-FPC/FFC/PIC;27P,1.25mm,STRAIGH	
UCW3	3708-001845	CONNECTOR-FPC/FFC/PIC;23P,1.25MM,STRAIGH	
UCW8	3708-001845	CONNECTOR-FPC/FFC/PIC;23P,1.25MM,STRAIGH	
UCH1	3711-000907	CONNECTOR-HEADER;BOX,3P,1R,2mm,STRAIGHT,	
UCH2	3711-001018	CONNECTOR-HEADER;BOX,5P,1R,2mm,STRAIGHT,	
HJACK1	3722-000351	JACK-PHONE;11P,3.5PI,AG,BLK,-	
MJACK1	3722-001190	JACK-PHONE;9P/2C,6.43PI,AU,BLK,RC6701(EI	
MJACK2	3722-001190	JACK-PHONE;9P/2C,6.43PI,AU,BLK,RC6701(EI	
RE-EYE	AC59-60060A	MODULE REMOCON;GP1U281R,SHARP,38KHZ,-,-,	
UVFD1	AH07-00066A	VF DISPLAY;HNA-16LM24T,MAX-B550/570/VB55	
UIC1	AH11-00094A	MASK ROM;LC876748C-52B9,MAX-KD100,56K,-	
UCA2	AH39-00101A	LEAD CONNECTOR ASSY;-,5295,51004,5P,150M	
	AH39-00264A	WIRE HARNESS;W2000,#1007,-,02P,-,-,-,529	
UCA1	AH39-00477A	LEAD CONNECTOR-ASSY;HT-DB300,-,-,3P,-,-,	
	AH39-50001N	WIRE HARNESS;RING,1007#24,250MM,BLK	
	AH61-00521A	HOLDER-VFD;MAXL65,ABS,-,-,-,BLK,-	
UD2	0401-000101	DIODE-SWITCHING;1N4148,100V,200mA,DO-35,	
UD22	0401-000101	DIODE-SWITCHING;1N4148,100V,200mA,DO-35,	
UD3	0401-000101	DIODE-SWITCHING;1N4148,100V,200mA,DO-35,	
UD41	0401-000101	DIODE-SWITCHING;1N4148,100V,200mA,DO-35,	
UD42	0401-000101	DIODE-SWITCHING;1N4148,100V,200mA,DO-35,	
UD7	0401-000101	DIODE-SWITCHING;1N4148,100V,200mA,DO-35,	
UD9	0401-000101	DIODE-SWITCHING;1N4148,100V,200mA,DO-35,	
UD18	0401-000101	DIODE-SWITCHING;1N4148,100V,200mA,DO-35,	

Location no	Code no.	Description	Specification	Remarks
HD1	0401-000101	DIODE-SWITCHING;1N4148,100V,200mA,DO-35,		
HD2	0401-000101	DIODE-SWITCHING;1N4148,100V,200mA,DO-35,		
MD1	0401-000101	DIODE-SWITCHING;1N4148,100V,200mA,DO-35,		
UD11	0401-000101	DIODE-SWITCHING;1N4148,100V,200mA,DO-35,		
UD17	0401-000101	DIODE-SWITCHING;1N4148,100V,200mA,DO-35,		
UD14	0401-000101	DIODE-SWITCHING;1N4148,100V,200mA,DO-35,		
UD12	0401-000101	DIODE-SWITCHING;1N4148,100V,200mA,DO-35,		
UD21	0402-000127	DIODE-RECTIFIER;1N4002,100V,1A,DO-41,TP		
UD27	0402-000127	DIODE-RECTIFIER;1N4002,100V,1A,DO-41,TP		
UD30	0402-000127	DIODE-RECTIFIER;1N4002,100V,1A,DO-41,TP		
UD31	0402-000127	DIODE-RECTIFIER;1N4002,100V,1A,DO-41,TP		
UD15	0402-000127	DIODE-RECTIFIER;1N4002,100V,1A,DO-41,TP		
UD16	0402-000127	DIODE-RECTIFIER;1N4002,100V,1A,DO-41,TP		
UD19	0402-000127	DIODE-RECTIFIER;1N4002,100V,1A,DO-41,TP		
UD20	0402-000127	DIODE-RECTIFIER;1N4002,100V,1A,DO-41,TP		
UZD1	0403-000392	DIODE-ZENER;UZP4.7B,4.7V,4.4-5.0V,1W,DO-		
UQ3	0501-000398	TR-SMALL SIGNAL;KSC945,NPN,250mW,TO-92,T		
UQ2	0501-000398	TR-SMALL SIGNAL;KSC945,NPN,250mW,TO-92,T		
UQ1	0501-000398	TR-SMALL SIGNAL;KSC945,NPN,250mW,TO-92,T		
UQ6	0501-000407	TR-SMALL SIGNAL;KSD471A-Y,NPN,800mW,TO-9		
UQ5	0501-000407	TR-SMALL SIGNAL;KSD471A-Y,NPN,800mW,TO-9		
UQ4	0501-000407	TR-SMALL SIGNAL;KSD471A-Y,NPN,800mW,TO-9		
UQ3	0501-000407	TR-SMALL SIGNAL;KSD471A-Y,NPN,800mW,TO-9		
UQ9	0501-000610	TR-SMALL SIGNAL;KSA928A-Y,PNP,1W,TO-92L,		
UQ8	0501-000610	TR-SMALL SIGNAL;KSA928A-Y,PNP,1W,TO-92L,		
UQ7	0501-000610	TR-SMALL SIGNAL;KSA928A-Y,PNP,1W,TO-92L,		
UQ12	0504-000118	TR-DIGITAL;KSR1003,NPN,300MW,22K/22K,TO-		
UQ11	0504-000118	TR-DIGITAL;KSR1003,NPN,300MW,22K/22K,TO-		
ULED4	0601-001074	LED;ROUND,GRN,3mm,569nm		
ULED3	0601-001074	LED;ROUND,GRN,3mm,569nm		
ULED2	0601-001074	LED;ROUND,GRN,3mm,569nm		
ULED1	0601-001074	LED;ROUND,GRN,3mm,569nm		
ULD5	0601-001238	LED;ROUND,RED,3.1mm,697nm		
UR53	2001-000003	R-CARBON;330ohm,5%,1/8W,AA,TP,1.8x3.2mm		
UR69	2001-000008	R-CARBON;15Kohm,5%,1/8W,AA,TP,1.8x3.2mm		
UR62	2001-000008	R-CARBON;15Kohm,5%,1/8W,AA,TP,1.8x3.2mm		
UR174	2001-000008	R-CARBON;15Kohm,5%,1/8W,AA,TP,1.8x3.2mm		
UR173	2001-000008	R-CARBON;15Kohm,5%,1/8W,AA,TP,1.8x3.2mm		
UR150	2001-000027	R-CARBON;100ohm,5%,1/4W,AA,TP,2.4x6.4mm		
UR63	2001-000036	R-CARBON;330ohm,5%,1/4W,AA,TP,2.4x6.4mm		
UR107	2001-000037	R-CARBON(S);330OHM,5%,1/2W,AA,TP,2.4X6.4		
UR90	2001-000221	R-CARBON;1.2Kohm,5%,1/8W,AA,TP,1.8x3.2m		
UR50	2001-000221	R-CARBON;1.2Kohm,5%,1/8W,AA,TP,1.8x3.2m		
UR129	2001-000221	R-CARBON;1.2Kohm,5%,1/8W,AA,TP,1.8x3.2m		
UR130	2001-000241	R-CARBON;1.5Kohm,5%,1/8W,AA,TP,1.8x3.2m		
UR91	2001-000241	R-CARBON;1.5Kohm,5%,1/8W,AA,TP,1.8x3.2m		
UR112	2001-000258	R-CARBON;1.8Kohm,5%,1/8W,AA,TP,1.8x3.2m		
MR40	2001-000273	R-CARBON;100Kohm,5%,1/8W,AA,TP,1.8x3.2m		
UR104	2001-000273	R-CARBON;100Kohm,5%,1/8W,AA,TP,1.8x3.2m		
UR75	2001-000281	R-CARBON;100ohm,5%,1/8W,AA,TP,1.8x3.2mm		
UR76	2001-000281	R-CARBON;100ohm,5%,1/8W,AA,TP,1.8x3.2mm		
UR77	2001-000281	R-CARBON;100ohm,5%,1/8W,AA,TP,1.8x3.2mm		
UR78	2001-000281	R-CARBON;100ohm,5%,1/8W,AA,TP,1.8x3.2mm		
MR3	2001-000281	R-CARBON;100ohm,5%,1/8W,AA,TP,1.8x3.2mm		
UR170	2001-000281	R-CARBON;100ohm,5%,1/8W,AA,TP,1.8x3.2mm		
UR171	2001-000281	R-CARBON;100ohm,5%,1/8W,AA,TP,1.8x3.2mm		
UR74	2001-000281	R-CARBON;100ohm,5%,1/8W,AA,TP,1.8x3.2mm		
UR6	2001-000290	R-CARBON;10Kohm,5%,1/8W,AA,TP,1.8x3.2mm		
UR54	2001-000290	R-CARBON;10Kohm,5%,1/8W,AA,TP,1.8x3.2mm		
UR5	2001-000290	R-CARBON;10Kohm,5%,1/8W,AA,TP,1.8x3.2mm		
UR64	2001-000290	R-CARBON;10Kohm,5%,1/8W,AA,TP,1.8x3.2mm		
UR7	2001-000290	R-CARBON;10Kohm,5%,1/8W,AA,TP,1.8x3.2mm		
UR70	2001-000290	R-CARBON;10Kohm,5%,1/8W,AA,TP,1.8x3.2mm		
UR71	2001-000290	R-CARBON;10Kohm,5%,1/8W,AA,TP,1.8x3.2mm		
UR47	2001-000290	R-CARBON;10Kohm,5%,1/8W,AA,TP,1.8x3.2mm		
UR3	2001-000290	R-CARBON;10Kohm,5%,1/8W,AA,TP,1.8x3.2mm		
UR39	2001-000290	R-CARBON;10Kohm,5%,1/8W,AA,TP,1.8x3.2mm		
UR4	2001-000290	R-CARBON;10Kohm,5%,1/8W,AA,TP,1.8x3.2mm		
UR40	2001-000290	R-CARBON;10Kohm,5%,1/8W,AA,TP,1.8x3.2mm		
UR41	2001-000290	R-CARBON;10Kohm,5%,1/8W,AA,TP,1.8x3.2mm		
UR42	2001-000290	R-CARBON;10Kohm,5%,1/8W,AA,TP,1.8x3.2mm		
UR43	2001-000290	R-CARBON;10Kohm,5%,1/8W,AA,TP,1.8x3.2mm		
UR86	2001-000290	R-CARBON;10Kohm,5%,1/8W,AA,TP,1.8x3.2mm		
UR87	2001-000290	R-CARBON;10Kohm,5%,1/8W,AA,TP,1.8x3.2mm		
UR9	2001-000290	R-CARBON;10Kohm,5%,1/8W,AA,TP,1.8x3.2mm		
UR92	2001-000290	R-CARBON;10Kohm,5%,1/8W,AA,TP,1.8x3.2mm		
UR93	2001-000290	R-CARBON;10Kohm,5%,1/8W,AA,TP,1.8x3.2mm		
UR94	2001-000290	R-CARBON;10Kohm,5%,1/8W,AA,TP,1.8x3.2mm		
UR95	2001-000290	R-CARBON;10Kohm,5%,1/8W,AA,TP,1.8x3.2mm		
UR85	2001-000290	R-CARBON;10Kohm,5%,1/8W,AA,TP,1.8x3.2mm		
UR72	2001-000290	R-CARBON;10Kohm,5%,1/8W,AA,TP,1.8x3.2mm		
UR73	2001-000290	R-CARBON;10Kohm,5%,1/8W,AA,TP,1.8x3.2mm		
UR8	2001-000290	R-CARBON;10Kohm,5%,1/8W,AA,TP,1.8x3.2mm		
UR80	2001-000290	R-CARBON;10Kohm,5%,1/8W,AA,TP,1.8x3.2mm		
UR81	2001-000290	R-CARBON;10Kohm,5%,1/8W,AA,TP,1.8x3.2mm		
UR82	2001-000290	R-CARBON;10Kohm,5%,1/8W,AA,TP,1.8x3.2mm		
UR84	2001-000290	R-CARBON;10Kohm,5%,1/8W,AA,TP,1.8x3.2mm		
UR120	2001-000290	R-CARBON;10Kohm,5%,1/8W,AA,TP,1.8x3.2mm		
UR121	2001-000290	R-CARBON;10Kohm,5%,1/8W,AA,TP,1.8x3.2mm		
UR122	2001-000290	R-CARBON;10Kohm,5%,1/8W,AA,TP,1.8x3.2mm		
UR13	2001-000290	R-CARBON;10Kohm,5%,1/8W,AA,TP,1.8x3.2mm		
UR135	2001-000290	R-CARBON;10Kohm,5%,1/8W,AA,TP,1.8x3.2mm		
UR136	2001-000290	R-CARBON;10Kohm,5%,1/8W,AA,TP,1.8x3.2mm		

Location no	Code no.	Description	Specification	Remarks
UR137	2001-000290	R-CARBON;10Kohm,5%,1/8W,AA,TP,1.8x3.2mm		
UR12	2001-000290	R-CARBON;10Kohm,5%,1/8W,AA,TP,1.8x3.2mm		
MR21	2001-000290	R-CARBON;10Kohm,5%,1/8W,AA,TP,1.8x3.2mm		
UJ505	2001-000290	R-CARBON;10Kohm,5%,1/8W,AA,TP,1.8x3.2mm		
UR1	2001-000290	R-CARBON;10Kohm,5%,1/8W,AA,TP,1.8x3.2mm		
UR10	2001-000290	R-CARBON;10Kohm,5%,1/8W,AA,TP,1.8x3.2mm		
UR100	2001-000290	R-CARBON;10Kohm,5%,1/8W,AA,TP,1.8x3.2mm		
UR101	2001-000290	R-CARBON;10Kohm,5%,1/8W,AA,TP,1.8x3.2mm		
UR11	2001-000290	R-CARBON;10Kohm,5%,1/8W,AA,TP,1.8x3.2mm		
UR2	2001-000290	R-CARBON;10Kohm,5%,1/8W,AA,TP,1.8x3.2mm		
UR23	2001-000290	R-CARBON;10Kohm,5%,1/8W,AA,TP,1.8x3.2mm		
UR24	2001-000290	R-CARBON;10Kohm,5%,1/8W,AA,TP,1.8x3.2mm		
UR25	2001-000290	R-CARBON;10Kohm,5%,1/8W,AA,TP,1.8x3.2mm		
UR26	2001-000290	R-CARBON;10Kohm,5%,1/8W,AA,TP,1.8x3.2mm		
UR27	2001-000290	R-CARBON;10Kohm,5%,1/8W,AA,TP,1.8x3.2mm		
UR28	2001-000290	R-CARBON;10Kohm,5%,1/8W,AA,TP,1.8x3.2mm		
UR16	2001-000290	R-CARBON;10Kohm,5%,1/8W,AA,TP,1.8x3.2mm		
UR138	2001-000290	R-CARBON;10Kohm,5%,1/8W,AA,TP,1.8x3.2mm		
UR139	2001-000290	R-CARBON;10Kohm,5%,1/8W,AA,TP,1.8x3.2mm		
UR14	2001-000290	R-CARBON;10Kohm,5%,1/8W,AA,TP,1.8x3.2mm		
UR140	2001-000290	R-CARBON;10Kohm,5%,1/8W,AA,TP,1.8x3.2mm		
UR142	2001-000290	R-CARBON;10Kohm,5%,1/8W,AA,TP,1.8x3.2mm		
UR143	2001-000290	R-CARBON;10Kohm,5%,1/8W,AA,TP,1.8x3.2mm		
UR15	2001-000290	R-CARBON;10Kohm,5%,1/8W,AA,TP,1.8x3.2mm		
UR21	2001-000295	R-CARBON;10MOHM,5%,1/8W,AA,TP,1.8X3.2MM		
UR19	2001-000362	R-CARBON;150ohm,5%,1/8W,AA,TP,1.8x3.2mm		
MR5	2001-000405	R-CARBON;180OHM,5%,1/8W,AA,TP,1.8X3.2MM		
UR131	2001-000405	R-CARBON;180OHM,5%,1/8W,AA,TP,1.8X3.2MM		
UR111	2001-000405	R-CARBON;180OHM,5%,1/8W,AA,TP,1.8X3.2MM		
UR109	2001-000405	R-CARBON;180OHM,5%,1/8W,AA,TP,1.8X3.2MM		
UR108	2001-000405	R-CARBON;180OHM,5%,1/8W,AA,TP,1.8X3.2MM		
UR89	2001-000429	R-CARBON;1Kohm,5%,1/8W,AA,TP,1.8x3.2mm		
UR51	2001-000429	R-CARBON;1Kohm,5%,1/8W,AA,TP,1.8x3.2mm		
UR128	2001-000429	R-CARBON;1Kohm,5%,1/8W,AA,TP,1.8x3.2mm		
UR22	2001-000435	R-CARBON;1Mohm,5%,1/8W,AA,TP,1.8x3.2mm		
MR4	2001-000435	R-CARBON;1Mohm,5%,1/8W,AA,TP,1.8x3.2mm		
UR88	2001-000449	R-CARBON;2.2Kohm,5%,1/8W,AA,TP,1.8x3.2m		
UR110	2001-000449	R-CARBON;2.2Kohm,5%,1/8W,AA,TP,1.8x3.2m		
MR6	2001-000449	R-CARBON;2.2Kohm,5%,1/8W,AA,TP,1.8x3.2m		
MR2	2001-000449	R-CARBON;2.2Kohm,5%,1/8W,AA,TP,1.8x3.2m		
UR133	2001-000472	R-CARBON;2.7Kohm,5%,1/8W,AA,TP,1.8x3.2m		
UR18	2001-000508	R-CARBON;220Kohm,5%,1/8W,AA,TP,1.8x3.2m		
UR124	2001-000522	R-CARBON;22Kohm,5%,1/8W,AA,TP,1.8x3.2mm		
UR172	2001-000522	R-CARBON;22Kohm,5%,1/8W,AA,TP,1.8x3.2mm		
UR44	2001-000522	R-CARBON;22Kohm,5%,1/8W,AA,TP,1.8x3.2mm		
UD23	2001-000525	R-CARBON;22ohm,5%,1/4W,AA,TP,2.4x6.4mm		
UJ1	2001-000527	R-CARBON;22ohm,5%,1/8W,AA,TP,1.8x3.2mm		
	2001-000554	R-CARBON;270ohm,5%,1/8W,AA,TP,1.8x3.2mm		
UR145	2001-000591	R-CARBON;3.3Kohm,5%,1/8W,AA,TP,1.8x3.2m		
UR68	2001-000660	R-CARBON;33Kohm,5%,1/8W,AA,TP,1.8x3.2mm		
UR61	2001-000660	R-CARBON;33Kohm,5%,1/8W,AA,TP,1.8x3.2mm		
UR46	2001-000734	R-CARBON;4.7Kohm,5%,1/8W,AA,TP,1.8x3.2m		
UR55	2001-000734	R-CARBON;4.7Kohm,5%,1/8W,AA,TP,1.8x3.2m		
UR56	2001-000734	R-CARBON;4.7Kohm,5%,1/8W,AA,TP,1.8x3.2m		
UR57	2001-000734	R-CARBON;4.7Kohm,5%,1/8W,AA,TP,1.8x3.2m		
UR17	2001-000734	R-CARBON;4.7Kohm,5%,1/8W,AA,TP,1.8x3.2m		
MR1	2001-000734	R-CARBON;4.7Kohm,5%,1/8W,AA,TP,1.8x3.2m		
MR7	2001-000734	R-CARBON;4.7Kohm,5%,1/8W,AA,TP,1.8x3.2m		
UR132	2001-000734	R-CARBON;4.7Kohm,5%,1/8W,AA,TP,1.8x3.2m		
UR146	2001-000734	R-CARBON;4.7Kohm,5%,1/8W,AA,TP,1.8x3.2m		
HR1	2001-000745	R-CARBON;4.7ohm,5%,1/8W,AA,TP,1.8x3.2mm		
HR2	2001-000745	R-CARBON;4.7ohm,5%,1/8W,AA,TP,1.8x3.2mm		
UJ138	2001-000780	R-CARBON;470ohm,5%,1/8W,AA,TP,1.8x3.2mm		
UR32	2001-000786	R-CARBON;47Kohm,5%,1/8W,AA,TP,1.8x3.2mm		
UR33	2001-000786	R-CARBON;47Kohm,5%,1/8W,AA,TP,1.8x3.2mm		
UR34	2001-000786	R-CARBON;47Kohm,5%,1/8W,AA,TP,1.8x3.2mm		
UR35	2001-000786	R-CARBON;47Kohm,5%,1/8W,AA,TP,1.8x3.2mm		
UR36	2001-000786	R-CARBON;47Kohm,5%,1/8W,AA,TP,1.8x3.2mm		
UR37	2001-000786	R-CARBON;47Kohm,5%,1/8W,AA,TP,1.8x3.2mm		
UR38	2001-000786	R-CARBON;47Kohm,5%,1/8W,AA,TP,1.8x3.2mm		
MR20	2001-000786	R-CARBON;47Kohm,5%,1/8W,AA,TP,1.8x3.2mm		
MR2132	2001-000786	R-CARBON;47Kohm,5%,1/8W,AA,TP,1.8x3.2mm		
UR134	2001-000786	R-CARBON;47Kohm,5%,1/8W,AA,TP,1.8x3.2mm		
UR200	2001-000786	R-CARBON;47Kohm,5%,1/8W,AA,TP,1.8x3.2mm		
UR31	2001-000786	R-CARBON;47Kohm,5%,1/8W,AA,TP,1.8x3.2mm		
UR30	2001-000786	R-CARBON;47Kohm,5%,1/8W,AA,TP,1.8x3.2mm		
UR29	2001-000786	R-CARBON;47Kohm,5%,1/8W,AA,TP,1.8x3.2mm		
UR20	2001-000850	R-CARBON;560Kohm,5%,1/8W,AA,TP,1.8x3.2m		
UR52	2001-000857	R-CARBON;560ohm,5%,1/8W,AA,TP,1.8x3.2mm		
UR119	2001-000890	R-CARBON;6.8Kohm,5%,1/8W,AA,TP,1.8x3.2m		
UR113	2001-000995	R-CARBON;820ohm,5%,1/8W,AA,TP,1.8x3.2mm		
UR127	2001-000995	R-CARBON;820ohm,5%,1/8W,AA,TP,1.8x3.2mm		
UR60	2001-001192	R-CARBON(S);820ohm,5%,1/2W,AA,TP,2.4x6.4		
UR59	2001-001192	R-CARBON(S);820ohm,5%,1/2W,AA,TP,2.4x6.4		
UR58	2001-001192	R-CARBON(S);820ohm,5%,1/2W,AA,TP,2.4x6.4		
URV1	2103-000492	VR-SEMI;5Kohm,30%,1/10W,TOP		
ZC5	2201-000132	C-CERAMIC,DISC;0.1NF,10%,500V,Y5P,TP,6.5		
UC11	2201-000300	C-CERAMIC,DISC;1NF,20%,50V,Y5T,TP,5X3MM,		
HC2	2201-000300	C-CERAMIC,DISC;1NF,20%,50V,Y5T,TP,5X3MM,		
HC1	2201-000300	C-CERAMIC,DISC;1NF,20%,50V,Y5T,TP,5X3MM,		
UC8	2201-000389	C-CERAMIC,DISC;0.022NF,5%,50V,C0G,TP,5X3		
UC7	2201-000389	C-CERAMIC,DISC;0.022NF,5%,50V,C0G,TP,5X3		
UC35	2201-000565	C-CERAMIC,DISC;47nF,+80-20%,-,,-,12.5x4m		

Location no	Code no.	Description Specification	Remarks
ZC1	2201-000565	C-CERAMIC,DISC;47nF,+80-20%,-,-,-12.5x4m	
ZC2	2201-000565	C-CERAMIC,DISC;47nF,+80-20%,-,-,-12.5x4m	
ZC4	2201-000565	C-CERAMIC,DISC;47nF,+80-20%,-,-,-12.5x4m	
UC1	2201-000565	C-CERAMIC,DISC;47nF,+80-20%,-,-,-12.5x4m	
UC10	2201-000565	C-CERAMIC,DISC;47nF,+80-20%,-,-,-12.5x4m	
UC15	2201-000565	C-CERAMIC,DISC;47nF,+80-20%,-,-,-12.5x4m	
UC3	2201-000565	C-CERAMIC,DISC;47nF,+80-20%,-,-,-12.5x4m	
UC17	2201-000783	C-CERAMIC,DISC;100NF,+80-20%,50V,Y5V,TP,	
UC60	2202-000780	C-CERAMIC,MLC-AXIAL;100nF,+80-20%,50V,Y5	
UC001	2202-000780	C-CERAMIC,MLC-AXIAL;100nF,+80-20%,50V,Y5	
UC24	2202-000796	C-CERAMIC,MLC-AXIAL;1NF,10%,50V,Y5P,TP,3	
UC25	2202-000796	C-CERAMIC,MLC-AXIAL;1NF,10%,50V,Y5P,TP,3	
UC39	2202-000796	C-CERAMIC,MLC-AXIAL;1NF,10%,50V,Y5P,TP,3	
UC901	2202-000796	C-CERAMIC,MLC-AXIAL;1NF,10%,50V,Y5P,TP,3	
UC18	2202-000796	C-CERAMIC,MLC-AXIAL;1NF,10%,50V,Y5P,TP,3	
UC19	2202-000796	C-CERAMIC,MLC-AXIAL;1NF,10%,50V,Y5P,TP,3	
UC20	2202-000796	C-CERAMIC,MLC-AXIAL;1NF,10%,50V,Y5P,TP,3	
UC21	2202-000796	C-CERAMIC,MLC-AXIAL;1NF,10%,50V,Y5P,TP,3	
UC28	2202-000797	C-CERAMIC,MLC-AXIAL;10NF,30%,16V,Y5S,TP,	
ZC3	2202-000854	C-CERAMIC,MLC-AXIAL;47nF,30%,50V,Y5R,TP,	
UC7A	2202-000854	C-CERAMIC,MLC-AXIAL;47nF,30%,50V,Y5R,TP,	
UC40	2301-000419	C-FILM,PEF;27nF,10%,50V,TP,7.5x10.5x4mm,	
UC37	2401-000438	C-AL;10UF,20%,25V,GP,-,5X11,5	
UC9	2401-000475	C-AL;10uF,20%,50V,GP,TP,5x11mm,5mm	
UC2	2401-000475	C-AL;10uF,20%,50V,GP,TP,5x11mm,5mm	
MC4	2401-000475	C-AL;10uF,20%,50V,GP,TP,5x11mm,5mm	
MC5	2401-001022	C-AL;3.3UF,20%,50V,GP,TP,5X11,5	
UC26	2401-001893	C-AL;100uF,20%,16V,GP,6*7,5MM,TP	
UC27	2401-001893	C-AL;100uF,20%,16V,GP,6*7,5MM,TP	
UC36	2401-001893	C-AL;100uF,20%,16V,GP,6*7,5MM,TP	
UC4	2401-001893	C-AL;100uF,20%,16V,GP,6*7,5MM,TP	
UC5	2401-001893	C-AL;100uF,20%,16V,GP,6*7,5MM,TP	
MC1	2401-001893	C-AL;100uF,20%,16V,GP,6*7,5MM,TP	
MC10	2401-001893	C-AL;100uF,20%,16V,GP,6*7,5MM,TP	
UC100	2401-001893	C-AL;100uF,20%,16V,GP,6*7,5MM,TP	
UC14	2401-001893	C-AL;100uF,20%,16V,GP,6*7,5MM,TP	
UC16	2401-001893	C-AL;100uF,20%,16V,GP,6*7,5MM,TP	
MC6	2401-001912	C-AL;1uF,20%,50V,GP,5*11,5mm,TP	
MC3	2401-001912	C-AL;1uF,20%,50V,GP,5*11,5mm,TP	
UC12	2401-001919	C-AL;2.2uF,20%,50V,GP,4*7,5MM,TP	
UC6	2401-001931	C-AL;220nF,20%,50V,-,TP,4x7mm,5	
MC2	2401-001975	C-AL;47uF,20%,16V,GP,TP,5x11mm,5mm	
UC38	2401-001975	C-AL;47uF,20%,16V,GP,TP,5x11mm,5mm	
MC30	2401-002180	C-AL;2.2uF,20%,50V,GP,TP,5x11mm,5mm	
UC13	2409-000123	C-EDL;47000uF,4uA,5.5V,-,BK,-,5mm	
UL4	2701-000114	INDUCTOR-AXIAL;10uH,10%,2.5x3.4mm	
UL3	2701-000114	INDUCTOR-AXIAL;10uH,10%,2.5x3.4mm	
UL2	2701-000114	INDUCTOR-AXIAL;10uH,10%,2.5x3.4mm	
UL19	2701-000114	INDUCTOR-AXIAL;10uH,10%,2.5x3.4mm	
UL18	2701-000114	INDUCTOR-AXIAL;10uH,10%,2.5x3.4mm	
UL9	2701-000114	INDUCTOR-AXIAL;10uH,10%,2.5x3.4mm	
UL8	2701-000114	INDUCTOR-AXIAL;10uH,10%,2.5x3.4mm	
UL7	2701-000114	INDUCTOR-AXIAL;10uH,10%,2.5x3.4mm	
UL6	2701-000114	INDUCTOR-AXIAL;10uH,10%,2.5x3.4mm	
UL5	2701-000114	INDUCTOR-AXIAL;10uH,10%,2.5x3.4mm	
UL12	2701-000114	INDUCTOR-AXIAL;10uH,10%,2.5x3.4mm	
UL11	2701-000114	INDUCTOR-AXIAL;10uH,10%,2.5x3.4mm	
UL10	2701-000114	INDUCTOR-AXIAL;10uH,10%,2.5x3.4mm	
UL1	2701-000114	INDUCTOR-AXIAL;10uH,10%,2.5x3.4mm	
HL1	2701-000114	INDUCTOR-AXIAL;10uH,10%,2.5x3.4mm	
UL17	2701-000114	INDUCTOR-AXIAL;10uH,10%,2.5x3.4mm	
UL16	2701-000114	INDUCTOR-AXIAL;10uH,10%,2.5x3.4mm	
UL15	2701-000114	INDUCTOR-AXIAL;10uH,10%,2.5x3.4mm	
UL14	2701-000114	INDUCTOR-AXIAL;10uH,10%,2.5x3.4mm	
UL13	2701-000114	INDUCTOR-AXIAL;10uH,10%,2.5x3.4mm	
USW5	3404-000165	SWITCH-TACT;12V,50mA,160gf,6x6mm,SPST	
USW4	3404-000165	SWITCH-TACT;12V,50mA,160gf,6x6mm,SPST	
USW3	3404-000165	SWITCH-TACT;12V,50mA,160gf,6x6mm,SPST	
USW2	3404-000165	SWITCH-TACT;12V,50mA,160gf,6x6mm,SPST	
USW6	3404-000165	SWITCH-TACT;12V,50mA,160gf,6x6mm,SPST	
USW7	3404-000165	SWITCH-TACT;12V,50mA,160gf,6x6mm,SPST	
USW8	3404-000165	SWITCH-TACT;12V,50mA,160gf,6x6mm,SPST	
USW9	3404-000165	SWITCH-TACT;12V,50mA,160gf,6x6mm,SPST	
USW17	3404-000165	SWITCH-TACT;12V,50mA,160gf,6x6mm,SPST	
USW1	3404-000165	SWITCH-TACT;12V,50mA,160gf,6x6mm,SPST	
USW10	3404-000165	SWITCH-TACT;12V,50mA,160gf,6x6mm,SPST	
USW11	3404-000165	SWITCH-TACT;12V,50mA,160gf,6x6mm,SPST	
USW12	3404-000165	SWITCH-TACT;12V,50mA,160gf,6x6mm,SPST	
USW16	3404-000165	SWITCH-TACT;12V,50mA,160gf,6x6mm,SPST	
USW15	3404-000165	SWITCH-TACT;12V,50mA,160gf,6x6mm,SPST	
USW14	3404-000165	SWITCH-TACT;12V,50mA,160gf,6x6mm,SPST	
USW13	3404-000165	SWITCH-TACT;12V,50mA,160gf,6x6mm,SPST	
	AH92-01856A	**ASSY PCB-MAIN;MAX-KD120,MAIN**	
RBD1	0402-001258	DIODE-BRIDGE;GBU606,600V,6A,SIP-4,BK	
RBD2	0402-001258	DIODE-BRIDGE;GBU606,600V,6A,SIP-4,BK	
OJAKC1	0603-001069	OPTIC TRANSMITTER;5V,8Mb/s,-,-17dBm,660n	
WIC2	1201-000191	IC-OP AMP;4558,DIP,8P,300MIL,DUAL,20V/mV	
WIC1	1201-000191	IC-OP AMP;4558,DIP,8P,300MIL,DUAL,20V/mV	
RIC3	1201-000191	IC-OP AMP;4558,DIP,8P,300MIL,DUAL,20V/mV	
KIC1	1201-000191	IC-OP AMP;4558,DIP,8P,300MIL,DUAL,20V/mV	
FIC1	1201-000191	IC-OP AMP;4558,DIP,8P,300MIL,DUAL,20V/mV	
DIC1	1201-001899	IC-PREAMP;HA12237F,QFP,40P,7X7MM,-,-,PLA	

Location no	Code no.	Description Specification	Remarks
RIC2	1203-000242	IC-POSI.FIXED REG.;7812,TO-220,3P,-,PLAS	
RIC1	1203-001653	IC-VOLTAGE REGULATOR;4959,MULTIWATT,15P,	
KIC2	1204-001730	IC-ECHO;M65855P,DIP,16P,300MIL,PLASTIC	
FIC2	1204-001776	IC-SOUND PROCESSOR;TDA7442D,SOP,28P,295M	
RR34	2003-000005	R-METAL OXIDE(S);1ohm,5%,2W,AA,TP,4x12mm	
RR9	2003-000455	R-METAL OXIDE(S);100ohm,5%,2W,AA,TP,4x12	
RR3	2003-000701	R-METAL OXIDE(S);470ohm,5%,2W,AA,TP,4x12	
RC18	2201-002128	C-CERAMIC,DISC;4.7NF,20%,400V,Y5U,BK,15X	
RC19	2201-002128	C-CERAMIC,DISC;4.7NF,20%,400V,Y5U,BK,15X	
CC3	2401-000129	C-AL;1000uF,20%,16V,GP,-,10x16mm,5	
RC16	2401-001886	C-AL;1000uF,20%,35V,GP,BK,16x25mm,5	
RC1	2401-001943	C-AL;3300uF,20%,50V,GP,BK,25x40mm,1	
RC2	2401-001943	C-AL;3300uF,20%,50V,GP,BK,25x40mm,1	
RC4	2401-003755	C-AL;6800UF,20%,35V,BP,TP,22X40MM,1	
RC3	2401-003755	C-AL;6800UF,20%,35V,BP,TP,22X40MM,1	
OLP1	2901-001139	FILTER-EMI ON BOARD;50V,.5A,-,390PF,7X2.	
RRL1	3501-001008	RELAY-POWER;12VDC,530MW,10000MA,1FORMC,1	
RF1	3601-000248	FUSE-CARTRIDGE;250V,2A,TIME-LAG,GLASS,5x	
TCW1	3708-000122	CONNECTOR-FPC/FFC/PIC;11P,1.25mm,ANGLE,S	
FCW4	3708-000181	CONNECTOR-FPC/FFC/PIC;16P,1.25mm,STRAIGH	
FCW2	3708-000181	CONNECTOR-FPC/FFC/PIC;16P,1.25mm,STRAIGH	
FCW1	3708-000181	CONNECTOR-FPC/FFC/PIC;16P,1.25mm,STRAIGH	
RCW2	3711-000190	CONNECTOR-HEADER;1WALL,2P,1R,7.92MM,STRA	
DCW2	3711-000907	CONNECTOR-HEADER;BOX,3P,1R,2mm,STRAIGHT,	
CCW1	3711-001137	CONNECTOR-HEADER;BOX,8P,1R,2mm,STRAIGHT,	
RCW1	3711-003075	CONNECTOR-HEADER;NOWALL,6P,1R,8mm,STRAIG	
DCW3	3711-003107	CONNECTOR-HEADER;BOX,3P,1R,2.5mm,STRAIGH	
DCW1	3711-003111	CONNECTOR-HEADER;BOX,6P,1R,2.5mm,STRAIGH	
RCW5	3711-003112	CONNECTOR-HEADER;BOX,8P,1R,2.5mm,STRAIGH	
ACW1	3711-003113	CONNECTOR-HEADER;BOX,9P,1R,2.5mm,STRAIGH	
AJCK	3722-000379	JACK-PIN;4P/2C,3.5mm,#16~22,SN	
OIC1	AH14-10004R	IC;M74HCU04,SOP,TAPE 14P	
P/T	AH26-00135C	TRANS POWER-XFO TRANS POWER;XFO TRANS PO	
DL2	AH26-10002W	TRANS TRAP-COIL;BIAS-TRAP105K,BIAS-TRAP,	
DL1	AH26-10002W	TRANS TRAP-COIL;BIAS-TRAP105K,BIAS-TRAP,	
DL4	AH26-10003C	TRANS TRAP-COIL;PCHNS-5371EQJ,BIAS-TRAP,	
RL2	AH27-10001F	COIL-CHOKE;27uH,K,Q30,-,-,.DR(6.5*7.5),-,	
RL1	AH27-10001F	COIL-CHOKE;27uH,K,Q30,-,-,.DR(6.5*7.5),-,	
	AH37-00005A	JACK—RCA;1P,S-440B,YELLOW,-,SHIELD PLAT	
	AH39-00096B	LEAD CONNECTOR ASSY;RXD-DV9,#1007,28,AWG	
VCW1	AH39-00347B	LEAD CONNECTOR;-,-,-,2P,-,-,-,5295,51004	
WD1	0401-000101	DIODE-SWITCHING;1N4148,100V,200mA,DO-35,	
TD2	0401-000101	DIODE-SWITCHING;1N4148,100V,200mA,DO-35,	
TD1	0401-000101	DIODE-SWITCHING;1N4148,100V,200mA,DO-35,	
RD8	0401-000101	DIODE-SWITCHING;1N4148,100V,200mA,DO-35,	
KR31	0401-000101	DIODE-SWITCHING;1N4148,100V,200mA,DO-35,	
DD1	0401-000101	DIODE-SWITCHING;1N4148,100V,200mA,DO-35,	
FD1	0401-000101	DIODE-SWITCHING;1N4148,100V,200mA,DO-35,	
KD1	0401-000101	DIODE-SWITCHING;1N4148,100V,200mA,DO-35,	
KD2	0401-000101	DIODE-SWITCHING;1N4148,100V,200mA,DO-35,	
RD3	0402-000127	DIODE-RECTIFIER;1N4002,100V,1A,DO-41,TP	
RD4	0402-000127	DIODE-RECTIFIER;1N4002,100V,1A,DO-41,TP	
RD5	0402-000127	DIODE-RECTIFIER;1N4002,100V,1A,DO-41,TP	
RD6	0402-000127	DIODE-RECTIFIER;1N4002,100V,1A,DO-41,TP	
RD7	0402-000127	DIODE-RECTIFIER;1N4002,100V,1A,DO-41,TP	
RD1	0402-000127	DIODE-RECTIFIER;1N4002,100V,1A,DO-41,TP	
RD12	0402-000127	DIODE-RECTIFIER;1N4002,100V,1A,DO-41,TP	
RD13	0402-000127	DIODE-RECTIFIER;1N4002,100V,1A,DO-41,TP	
RD14	0402-000127	DIODE-RECTIFIER;1N4002,100V,1A,DO-41,TP	
RD2	0402-000127	DIODE-RECTIFIER;1N4002,100V,1A,DO-41,TP	
RD11	0402-000151	DIODE-RECTIFIER;1N5392,100V,1.5A,DO-15,T	
RZD7	0403-000352	DIODE-ZENER;UZ4.7BM,4.7V,4.4-5.0V,500mW,	
WZD1	0403-000354	DIODE-ZENER;UZ5.1B,5.1V,4.8-5.4V,500mW,D	
RZD1	0403-000354	DIODE-ZENER;UZ5.1B,5.1V,4.8-5.4V,500mW,D	
KZD1	0403-000354	DIODE-ZENER;UZ5.1B,5.1V,4.8-5.4V,500mW,D	
FZD1	0403-000372	DIODE-ZENER;UZ9.1BM,9.1V,8.7-9.4V,500mW,	
RZD5	0403-000380	DIODE-ZENER;UZP13B,13V,12.4-14.1V,1W,DO-	
RZD3	0403-000564	DIODE-ZENER;TZP16A,16V,15.3-17.1V,1W,DO-	
RZD2	0403-000570	DIODE-ZENER;UZP18B,18V,16.9-19.1V,1W,DO-	
RZD4	0403-001010	DIODE-ZENER;UZP5.6B,5.6V,5.2-6.0V,1W,DO	
RQ3	0501-000010	TR-SMALL SIGNAL;KSC1008,NPN,800mW,TO-92,	
DQ9	0501-000010	TR-SMALL SIGNAL;KSC1008,NPN,800mW,TO-92,	
DQ8	0501-000010	TR-SMALL SIGNAL;KSC1008,NPN,800mW,TO-92,	
DQ7	0501-000010	TR-SMALL SIGNAL;KSC1008,NPN,800mW,TO-92,	
DQ6	0501-000010	TR-SMALL SIGNAL;KSC1008,NPN,800mW,TO-92,	
RQ2	0501-000294	TR-SMALL SIGNAL;KSA708-Y,PNP,800mW,TO-92	
CQ2	0501-000331	TR-SMALL SIGNAL;KSC1009-Y,NPN,800mW,TO-9	
CQ3	0501-000331	TR-SMALL SIGNAL;KSC1009-Y,NPN,800mW,TO-9	
DQ4	0501-000369	TR-SMALL SIGNAL;KSC2331-Y,NPN,1000mW,TO-	
DQ1	0501-000398	TR-SMALL SIGNAL;KSC945,NPN,250mW,TO-92,T	
FQ1	0501-000398	TR-SMALL SIGNAL;KSC945,NPN,250mW,TO-92,T	
RQ1	0501-000610	TR-SMALL SIGNAL;KSA928A-Y,PNP,1W,TO-92L,	
DQ3	0501-000610	TR-SMALL SIGNAL;KSA928A-Y,PNP,1W,TO-92L,	
KQ4	0504-000118	TR-DIGITAL;KSR1003,NPN,300MW,22K/22K,TO-	
KQ3	0504-000118	TR-DIGITAL;KSR1003,NPN,300MW,22K/22K,TO-	
KQ2	0504-000122	TR-DIGITAL;KSR1009Y,NPN,300mW,4.7K,TO-92	
DQ5	0504-001003	TR-DIGITAL;KSR2003,PNP,300MW,22K/22K,TO-	
CQ1	0504-001003	TR-DIGITAL;KSR2003,PNP,300MW,22K/22K,TO-	
KR28	2001-000008	R-CARBON;15Kohm,5%,1/8W,AA,TP,1.8x3.2mm	
KR24	2001-000008	R-CARBON;15Kohm,5%,1/8W,AA,TP,1.8x3.2mm	
FR8	2001-000008	R-CARBON;15Kohm,5%,1/8W,AA,TP,1.8x3.2mm	
CR4	2001-000008	R-CARBON;15Kohm,5%,1/8W,AA,TP,1.8x3.2mm	
CR7	2001-000008	R-CARBON;15Kohm,5%,1/8W,AA,TP,1.8x3.2mm	

Location no	Code no.	Description	Specification	Remarks
FR1	2001-000008	R-CARBON;15Kohm,5%,1/8W,AA,TP,1.8x3.2mm		
WR6	2001-000012	R-CARBON;680Kohm,5%,1/8W,AA,TP,1.8x3.2m		
FR11	2001-000027	R-CARBON;100ohm,5%,1/4W,AA,TP,2.4x6.4mm		
RR10	2001-000038	R-CARBON;390ohm,5%,1/4W,AA,TP,2.4x6.4mm		
RR11	2001-000050	R-CARBON;2.7Kohm,5%,1/4W,AA,TP,2.4x6.4m		
DR18	2001-000111	R-CARBON;150ohm,5%,1/4W,AA,TP,2.4x6.4mm		
WR7	2001-000241	R-CARBON;1.5Kohm,5%,1/8W,AA,TP,1.8x3.2m		
RR28	2001-000273	R-CARBON;100Kohm,5%,1/8W,AA,TP,1.8x3.2m		
RR15	2001-000273	R-CARBON;100Kohm,5%,1/8W,AA,TP,1.8x3.2m		
FR25	2001-000273	R-CARBON;100Kohm,5%,1/8W,AA,TP,1.8x3.2m		
FR24	2001-000273	R-CARBON;100Kohm,5%,1/8W,AA,TP,1.8x3.2m		
TR3	2001-000281	R-CARBON;100ohm,5%,1/8W,AA,TP,1.8x3.2mm		
TR4	2001-000281	R-CARBON;100ohm,5%,1/8W,AA,TP,1.8x3.2mm		
TR5	2001-000281	R-CARBON;100ohm,5%,1/8W,AA,TP,1.8x3.2mm		
TR6	2001-000281	R-CARBON;100ohm,5%,1/8W,AA,TP,1.8x3.2mm		
WR1	2001-000281	R-CARBON;100ohm,5%,1/8W,AA,TP,1.8x3.2mm		
TR2	2001-000281	R-CARBON;100ohm,5%,1/8W,AA,TP,1.8x3.2mm		
DR1	2001-000281	R-CARBON;100ohm,5%,1/8W,AA,TP,1.8x3.2mm		
DR2	2001-000281	R-CARBON;100ohm,5%,1/8W,AA,TP,1.8x3.2mm		
DR3	2001-000281	R-CARBON;100ohm,5%,1/8W,AA,TP,1.8x3.2mm		
DR4	2001-000281	R-CARBON;100ohm,5%,1/8W,AA,TP,1.8x3.2mm		
TR1	2001-000281	R-CARBON;100ohm,5%,1/8W,AA,TP,1.8x3.2mm		
WR9	2001-000290	R-CARBON;10Kohm,5%,1/8W,AA,TP,1.8x3.2mm		
KR26	2001-000290	R-CARBON;10Kohm,5%,1/8W,AA,TP,1.8x3.2mm		
KR23	2001-000290	R-CARBON;10Kohm,5%,1/8W,AA,TP,1.8x3.2mm		
KR20	2001-000290	R-CARBON;10Kohm,5%,1/8W,AA,TP,1.8x3.2mm		
DR24	2001-000290	R-CARBON;10Kohm,5%,1/8W,AA,TP,1.8x3.2mm		
DR9	2001-000302	R-CARBON;10ohm,5%,1/8W,AA,TP,1.8x3.2mm		
DR11	2001-000302	R-CARBON;10ohm,5%,1/8W,AA,TP,1.8x3.2mm		
KR25	2001-000319	R-CARBON;120Kohm,5%,1/8W,AA,TP,1.8x3.2m		
KR18	2001-000319	R-CARBON;120Kohm,5%,1/8W,AA,TP,1.8x3.2m		
TR12	2001-000331	R-CARBON;12Kohm,5%,1/8W,AA,TP,1.8x3.2mm		
TR9	2001-000331	R-CARBON;12Kohm,5%,1/8W,AA,TP,1.8x3.2mm		
CR5	2001-000411	R-CARBON;18Kohm,5%,1/8W,AA,TP,1.8x3.2mm		
CR2	2001-000411	R-CARBON;18Kohm,5%,1/8W,AA,TP,1.8x3.2mm		
RR4	2001-000429	R-CARBON;1Kohm,5%,1/8W,AA,TP,1.8x3.2mm		
KR30	2001-000429	R-CARBON;1Kohm,5%,1/8W,AA,TP,1.8x3.2mm		
JW10	2001-000429	R-CARBON;1Kohm,5%,1/8W,AA,TP,1.8x3.2mm		
DR10	2001-000435	R-CARBON;1Mohm,5%,1/8W,AA,TP,1.8x3.2mm		
KR12	2001-000449	R-CARBON;2.2Kohm,5%,1/8W,AA,TP,1.8x3.2m		
KR15	2001-000449	R-CARBON;2.2Kohm,5%,1/8W,AA,TP,1.8x3.2m		
RR17	2001-000449	R-CARBON;2.2Kohm,5%,1/8W,AA,TP,1.8x3.2m		
FR17	2001-000449	R-CARBON;2.2Kohm,5%,1/8W,AA,TP,1.8x3.2m		
FR16	2001-000449	R-CARBON;2.2Kohm,5%,1/8W,AA,TP,1.8x3.2m		
DR6	2001-000449	R-CARBON;2.2Kohm,5%,1/8W,AA,TP,1.8x3.2m		
DR13	2001-000449	R-CARBON;2.2Kohm,5%,1/8W,AA,TP,1.8x3.2m		
RR19	2001-000472	R-CARBON;2.7Kohm,5%,1/8W,AA,TP,1.8x3.2m		
WR3	2001-000515	R-CARBON;220ohm,5%,1/8W,AA,TP,1.8x3.2mm		
WR10	2001-000522	R-CARBON;22Kohm,5%,1/8W,AA,TP,1.8x3.2mm		
KR8	2001-000522	R-CARBON;22Kohm,5%,1/8W,AA,TP,1.8x3.2mm		
KR7	2001-000522	R-CARBON;22Kohm,5%,1/8W,AA,TP,1.8x3.2mm		
DR5	2001-000522	R-CARBON;22Kohm,5%,1/8W,AA,TP,1.8x3.2mm		
KR21	2001-000522	R-CARBON;22Kohm,5%,1/8W,AA,TP,1.8x3.2mm		
KR29	2001-000522	R-CARBON;22Kohm,5%,1/8W,AA,TP,1.8x3.2mm		
TR8	2001-000563	R-CARBON;27Kohm,5%,1/8W,AA,TP,1.8x3.2mm		
RR12	2001-000563	R-CARBON;27Kohm,5%,1/8W,AA,TP,1.8x3.2mm		
DR7	2001-000563	R-CARBON;27Kohm,5%,1/8W,AA,TP,1.8x3.2mm		
DR14	2001-000563	R-CARBON;27Kohm,5%,1/8W,AA,TP,1.8x3.2mm		
DR38	2001-000563	R-CARBON;27Kohm,5%,1/8W,AA,TP,1.8x3.2mm		
DR39	2001-000563	R-CARBON;27Kohm,5%,1/8W,AA,TP,1.8x3.2mm		
FR5	2001-000591	R-CARBON;3.3Kohm,5%,1/8W,AA,TP,1.8x3.2m		
FR7	2001-000591	R-CARBON;3.3Kohm,5%,1/8W,AA,TP,1.8x3.2m		
RR27	2001-000591	R-CARBON;3.3Kohm,5%,1/8W,AA,TP,1.8x3.2m		
WR5	2001-000591	R-CARBON;3.3Kohm,5%,1/8W,AA,TP,1.8x3.2m		
FR4	2001-000591	R-CARBON;3.3Kohm,5%,1/8W,AA,TP,1.8x3.2m		
DR20	2001-000591	R-CARBON;3.3Kohm,5%,1/8W,AA,TP,1.8x3.2m		
DR21	2001-000591	R-CARBON;3.3Kohm,5%,1/8W,AA,TP,1.8x3.2m		
DR28	2001-000591	R-CARBON;3.3Kohm,5%,1/8W,AA,TP,1.8x3.2m		
FR2	2001-000591	R-CARBON;3.3Kohm,5%,1/8W,AA,TP,1.8x3.2m		
RR6	2001-000613	R-CARBON;3.9Kohm,5%,1/8W,AA,TP,1.8x3.2m		
CR5	2001-000613	R-CARBON;3.9Kohm,5%,1/8W,AA,TP,1.8x3.2m		
CR2	2001-000613	R-CARBON;3.9Kohm,5%,1/8W,AA,TP,1.8x3.2m		
FR13	2001-000645	R-CARBON;330Kohm,5%,1/8W,AA,TP,1.8x3.2m		
RR23	2001-000660	R-CARBON;33Kohm,5%,1/8W,AA,TP,1.8x3.2mm		
RR21	2001-000660	R-CARBON;33Kohm,5%,1/8W,AA,TP,1.8x3.2mm		
WR4	2001-000702	R-CARBON;39Kohm,5%,1/8W,AA,TP,1.8x3.2mm		
RR16	2001-000702	R-CARBON;39Kohm,5%,1/8W,AA,TP,1.8x3.2mm		
FR12	2001-000702	R-CARBON;39Kohm,5%,1/8W,AA,TP,1.8x3.2mm		
RR14	2001-000734	R-CARBON;4.7Kohm,5%,1/8W,AA,TP,1.8x3.2m		
RR5	2001-000734	R-CARBON;4.7Kohm,5%,1/8W,AA,TP,1.8x3.2m		
TR10	2001-000734	R-CARBON;4.7Kohm,5%,1/8W,AA,TP,1.8x3.2m		
TR11	2001-000734	R-CARBON;4.7Kohm,5%,1/8W,AA,TP,1.8x3.2m		
TR7	2001-000734	R-CARBON;4.7Kohm,5%,1/8W,AA,TP,1.8x3.2m		
WR11	2001-000734	R-CARBON;4.7Kohm,5%,1/8W,AA,TP,1.8x3.2m		
DR102	2001-000734	R-CARBON;4.7Kohm,5%,1/8W,AA,TP,1.8x3.2m		
DR16	2001-000734	R-CARBON;4.7Kohm,5%,1/8W,AA,TP,1.8x3.2m		
DR29	2001-000734	R-CARBON;4.7Kohm,5%,1/8W,AA,TP,1.8x3.2m		
KR27	2001-000734	R-CARBON;4.7Kohm,5%,1/8W,AA,TP,1.8x3.2m		
KR6	2001-000734	R-CARBON;4.7Kohm,5%,1/8W,AA,TP,1.8x3.2m		
KR9	2001-000734	R-CARBON;4.7Kohm,5%,1/8W,AA,TP,1.8x3.2m		
RR24	2001-000773	R-CARBON;470Kohm,5%,1/8W,AA,TP,1.8x3.2m		
FR23	2001-000773	R-CARBON;470Kohm,5%,1/8W,AA,TP,1.8x3.2m		
WR50	2001-000780	R-CARBON;470ohm,5%,1/8W,AA,TP,1.8x3.2mm		

Location no	Code no.	Description	Specification	Remarks
RR20	2001-000786	R-CARBON;47Kohm,5%,1/8W,AA,TP,1.8x3.2mm		
KR17	2001-000786	R-CARBON;47Kohm,5%,1/8W,AA,TP,1.8x3.2mm		
KR16	2001-000786	R-CARBON;47Kohm,5%,1/8W,AA,TP,1.8x3.2mm		
RR22	2001-000786	R-CARBON;47Kohm,5%,1/8W,AA,TP,1.8x3.2mm		
WR12	2001-000786	R-CARBON;47Kohm,5%,1/8W,AA,TP,1.8x3.2mm		
WR13	2001-000786	R-CARBON;47Kohm,5%,1/8W,AA,TP,1.8x3.2mm		
WR2	2001-000786	R-CARBON;47Kohm,5%,1/8W,AA,TP,1.8x3.2mm		
CR3	2001-000786	R-CARBON;47Kohm,5%,1/8W,AA,TP,1.8x3.2mm		
CR6	2001-000786	R-CARBON;47Kohm,5%,1/8W,AA,TP,1.8x3.2mm		
DR19	2001-000786	R-CARBON;47Kohm,5%,1/8W,AA,TP,1.8x3.2mm		
FR14	2001-000786	R-CARBON;47Kohm,5%,1/8W,AA,TP,1.8x3.2mm		
FR6	2001-000786	R-CARBON;47Kohm,5%,1/8W,AA,TP,1.8x3.2mm		
FR3	2001-000786	R-CARBON;47Kohm,5%,1/8W,AA,TP,1.8x3.2mm		
FR15	2001-000786	R-CARBON;47Kohm,5%,1/8W,AA,TP,1.8x3.2mm		
WR30	2001-000802	R-CARBON;5.6Kohm,5%,1/8W,AA,TP,1.8x3.2m		
FR9	2001-000802	R-CARBON;5.6Kohm,5%,1/8W,AA,TP,1.8x3.2m		
FR10	2001-000802	R-CARBON;5.6Kohm,5%,1/8W,AA,TP,1.8x3.2m		
DR110	2001-000802	R-CARBON;5.6Kohm,5%,1/8W,AA,TP,1.8x3.2m		
DR101	2001-000802	R-CARBON;5.6Kohm,5%,1/8W,AA,TP,1.8x3.2m		
FR21	2001-000864	R-CARBON;56Kohm,5%,1/8W,AA,TP,1.8x3.2mm		
FR20	2001-000864	R-CARBON;56Kohm,5%,1/8W,AA,TP,1.8x3.2mm		
DR37	2001-000890	R-CARBON;6.8Kohm,5%,1/8W,AA,TP,1.8x3.2m		
KR4	2001-000890	R-CARBON;6.8Kohm,5%,1/8W,AA,TP,1.8x3.2m		
KR5	2001-000890	R-CARBON;6.8Kohm,5%,1/8W,AA,TP,1.8x3.2m		
RR7	2001-000890	R-CARBON;6.8Kohm,5%,1/8W,AA,TP,1.8x3.2m		
DR36	2001-000890	R-CARBON;6.8Kohm,5%,1/8W,AA,TP,1.8x3.2m		
DR12	2001-000890	R-CARBON;6.8Kohm,5%,1/8W,AA,TP,1.8x3.2m		
DR27	2001-000890	R-CARBON;6.8Kohm,5%,1/8W,AA,TP,1.8x3.2m		
DR34	2001-000890	R-CARBON;6.8Kohm,5%,1/8W,AA,TP,1.8x3.2m		
DR35	2001-000890	R-CARBON;6.8Kohm,5%,1/8W,AA,TP,1.8x3.2m		
DR33	2001-000924	R-CARBON;680ohm,5%,1/8W,AA,TP,1.8x3.2mm		
DR32	2001-000924	R-CARBON;680ohm,5%,1/8W,AA,TP,1.8x3.2mm		
DR31	2001-000924	R-CARBON;680ohm,5%,1/8W,AA,TP,1.8x3.2mm		
DR30	2001-000924	R-CARBON;680ohm,5%,1/8W,AA,TP,1.8x3.2mm		
KR19	2001-000977	R-CARBON;8.2KOHM,5%,1/8W,AA,TP,1.8x3.2m		
DR8	2001-000977	R-CARBON;8.2KOHM,5%,1/8W,AA,TP,1.8x3.2m		
DR26	2001-000977	R-CARBON;8.2KOHM,5%,1/8W,AA,TP,1.8x3.2m		
RR13	2001-001004	R-CARBON;82ohm,5%,1/4W,AA,TP,2.4x6.4mm		
DR23	2001-001096	R-CARBON(S);2.2ohm,5%,1/2W,AA,TP,2.4x6.4		
RR2	2001-001153	R-CARBON(S);47ohm,5%,1/2W,AA,TP,2.4x6.4m		
RR1	2001-001153	R-CARBON(S);47ohm,5%,1/2W,AA,TP,2.4x6.4m		
RR8	2003-000542	R-METAL OXIDE(S);1ohm,5%,1W,AA,TP,3.3x9m		
RC26	2201-000161	C-CERAMIC,DISC;10NF,+80-20%,500V,Y5V,TP,		
RC25	2201-000161	C-CERAMIC,DISC;10NF,+80-20%,500V,Y5V,TP,		
RC24	2201-000161	C-CERAMIC,DISC;10NF,+80-20%,500V,Y5V,TP,		
RC23	2201-000161	C-CERAMIC,DISC;10NF,+80-20%,500V,Y5V,TP,		
RC22	2201-000161	C-CERAMIC,DISC;10NF,+80-20%,500V,Y5V,TP,		
DC23	2201-000300	C-CERAMIC,DISC;1NF,20%,50V,Y5T,TP,5X3MM,		
DC22	2201-000300	C-CERAMIC,DISC;1NF,20%,50V,Y5T,TP,5X3MM,		
DC19	2201-000300	C-CERAMIC,DISC;1NF,20%,50V,Y5T,TP,5X3MM,		
DC18	2201-000300	C-CERAMIC,DISC;1NF,20%,50V,Y5T,TP,5X3MM,		
0C4	2201-000300	C-CERAMIC,DISC;1NF,20%,50V,Y5T,TP,5X3MM,		
FC29	2201-000368	C-CERAMIC,DISC;0.22NF,10%,50V,SL,TP,6.5X		
FC3	2201-000368	C-CERAMIC,DISC;0.22NF,10%,50V,SL,TP,6.5X		
FC6	2201-000368	C-CERAMIC,DISC;0.22NF,10%,50V,SL,TP,6.5X		
KC3	2201-000368	C-CERAMIC,DISC;0.22NF,10%,50V,SL,TP,6.5X		
KC4	2201-000368	C-CERAMIC,DISC;0.22NF,10%,50V,SL,TP,6.5X		
DC17	2201-000368	C-CERAMIC,DISC;0.22NF,10%,50V,SL,TP,6.5X		
DC33	2201-000368	C-CERAMIC,DISC;0.22NF,10%,50V,SL,TP,6.5X		
FC26	2201-000368	C-CERAMIC,DISC;0.22NF,10%,50V,SL,TP,6.5X		
FC27	2201-000368	C-CERAMIC,DISC;0.22NF,10%,50V,SL,TP,6.5X		
FC28	2201-000368	C-CERAMIC,DISC;0.22NF,10%,50V,SL,TP,6.5X		
OC1	2201-000487	C-CERAMIC,DISC;33pF,5%,50V,SL,TP,5x3,5m		
WC4	2201-000557	C-CERAMIC,DISC;0.47NF,10%,50V,SL,TP,8X3.		
DC1	2201-000674	C-CERAMIC,DISC;0.82NF,10%,50V,Y5P,BK,5X3		
DC29	2201-000674	C-CERAMIC,DISC;0.82NF,10%,50V,Y5P,BK,5X3		
KC18	2202-000780	C-CERAMIC,MLC-AXIAL;100nF,+80-20%,50V,Y5		
EMC1	2202-000780	C-CERAMIC,MLC-AXIAL;100nF,+80-20%,50V,Y5		
TC7	2202-000781	C-CERAMIC,MLC-AXIAL;100pF,10%,50V,Y5P,TP		
TC6	2202-000781	C-CERAMIC,MLC-AXIAL;100pF,10%,50V,Y5P,TP		
TC5	2202-000781	C-CERAMIC,MLC-AXIAL;100pF,10%,50V,Y5P,TP		
TC4	2202-000781	C-CERAMIC,MLC-AXIAL;100pF,10%,50V,Y5P,TP		
TC3	2202-000781	C-CERAMIC,MLC-AXIAL;100pF,10%,50V,Y5P,TP		
TC2	2202-000781	C-CERAMIC,MLC-AXIAL;100pF,10%,50V,Y5P,TP		
TC1	2202-000781	C-CERAMIC,MLC-AXIAL;100pF,10%,50V,Y5P,TP		
TC20	2202-000796	C-CERAMIC,MLC-AXIAL;1NF,10%,50V,Y5P,TP,3		
EMC2	2202-000796	C-CERAMIC,MLC-AXIAL;1NF,10%,50V,Y5P,TP,3		
KC17	2202-000797	C-CERAMIC,MLC-AXIAL;10NF,30%,16V,Y5S,TP,		
KC20	2202-000797	C-CERAMIC,MLC-AXIAL;10NF,30%,16V,Y5S,TP,		
EMC4	2202-000806	C-CERAMIC,MLC-AXIAL;220pF,10%,50V,Y5P,TP		
EMC3	2202-000806	C-CERAMIC,MLC-AXIAL;220pF,10%,50V,Y5P,TP		
KC19	2202-000809	C-CERAMIC,MLC-AXIAL;3.3nF,20%,16V,Y5R,-,		
KC10	2202-000829	C-CERAMIC,MLC-AXIAL;0.82NF,10%,50V,Y5P,T		
KC15	2202-000854	C-CERAMIC,MLC-AXIAL;47nF,30%,50V,Y5R,TP,		
KC16	2202-000854	C-CERAMIC,MLC-AXIAL;47nF,30%,50V,Y5R,TP,		
FC14	2301-000361	C-FILM,PEF;1.2nF,10%,50V,TP,-,5mm		
FC16	2301-000375	C-FILM,PEF;100nF,10%,TP,50V,11x12.5x6.5,		
FC17	2301-000375	C-FILM,PEF;100nF,10%,TP,50V,11x12.5x6.5,		
FC32	2301-000375	C-FILM,PEF;100nF,10%,TP,50V,11x12.5x6.5,		
KC2	2301-000375	C-FILM,PEF;100nF,10%,TP,50V,11x12.5x6.5,		
KC5	2301-000375	C-FILM,PEF;100nF,10%,TP,50V,11x12.5x6.5,		
WC5	2301-000375	C-FILM,PEF;100nF,10%,TP,50V,11x12.5x6.5,		
DC10	2301-000375	C-FILM,PEF;100nF,10%,TP,50V,11x12.5x6.5,		

Location no	Code no.	Description Specification	Remarks
DC25	2301-000375	C-FILM,PEF;100nF,10%,TP,50V,11x12.5x6.5,	
DC26	2301-000375	C-FILM,PEF;100nF,10%,TP,50V,11x12.5x6.5,	
FC15	2301-000375	C-FILM,PEF;100nF,10%,TP,50V,11x12.5x6.5,	
FC13	2301-000375	C-FILM,PEF;100nF,10%,TP,50V,11x12.5x6.5,	
DC7	2301-000375	C-FILM,PEF;100nF,10%,TP,50V,11x12.5x6.5,	
KC12	2301-000379	C-FILM,PEF;10nF,10%,50V,TP,6x12x3.5mm,-	
KC11	2301-000379	C-FILM,PEF;10nF,10%,50V,TP,6x12x3.5mm,-	
DC24	2301-000379	C-FILM,PEF;10nF,10%,50V,TP,6x12x3.5mm,-	
DC11	2301-000379	C-FILM,PEF;10nF,10%,50V,TP,6x12x3.5mm,-	
DC16	2301-000404	C-FILM,PEF;2.2nF,10%,50V,TP,5.5x12x3mm,-	
DC15	2301-000404	C-FILM,PEF;2.2nF,10%,50V,TP,5.5x12x3mm,-	
DC14	2301-000404	C-FILM,PEF;2.2nF,10%,50V,TP,5.5x12x3mm,-	
DC13	2301-000407	C-FILM,PEF;2.7nF,10%,50V,TP,5.5x12x3mm,-	
WC9	2301-000412	C-FILM,PEF;22nF,10%,50V,TP,8x12x4mm,-	
DC8	2301-000412	C-FILM,PEF;22nF,10%,50V,TP,8x12x4mm,-	
DC31	2301-000412	C-FILM,PEF;22nF,10%,50V,TP,8x12x4mm,-	
KC13	2301-000442	C-FILM,PEF;4.7nF,10%,50V,TP,5.5x7x3mm,5m	
CC2	2301-000449	C-FILM,PEF;47nF,10%,50V,TP,9.5x12.5x5mm,	
FC12	2301-000454	C-FILM,PEF;5.6nF,10%,50V,TP,6x12x3,3.5mm	
FC11	2301-000454	C-FILM,PEF;5.6nF,10%,50V,TP,6x12x3,3.5mm	
KC14	2301-000474	C-FILM,PEF;8.2nF,10%,50V,TP,6.5x12x3.5,3	
RC15	2401-000240	C-AL;100uF,20%,10V,GP,TP,5x11,5	
KC23	2401-000240	C-AL;100uF,20%,10V,GP,TP,5x11,5	
FC5	2401-000240	C-AL;100uF,20%,10V,GP,TP,5x11,5	
CC4	2401-000240	C-AL;100uF,20%,10V,GP,TP,5x11,5	
RC6	2401-000357	C-AL;100UF,0.2,50V,GP,8*12,5MM,SSL	
RC5	2401-000357	C-AL;100UF,0.2,50V,GP,8*12,5MM,SSL	
RC9	2401-000438	C-AL;10UF,20%,25V,GP,-,5X11,5	
DC30	2401-000438	C-AL;10UF,20%,25V,GP,-,5X11,5	
CC5	2401-000438	C-AL;10UF,20%,25V,GP,-,5X11,5	
WC8	2401-000475	C-AL;10uF,20%,50V,GP,TP,5x11mm,5mm	
WC3	2401-000475	C-AL;10uF,20%,50V,GP,TP,5x11mm,5mm	
WC2	2401-000475	C-AL;10uF,20%,50V,GP,TP,5x11mm,5mm	
WC1	2401-000475	C-AL;10uF,20%,50V,GP,TP,5x11mm,5mm	
RC11	2401-000830	C-AL;220uF,20%,25V,GP,TP,8x11.5,5	
RC10	2401-000907	C-AL;22uF,20%,16V,GP,TP,5x11mm,5mm	
KC22	2401-000907	C-AL;22uF,20%,16V,GP,TP,5x11mm,5mm	
FC10	2401-000907	C-AL;22uF,20%,16V,GP,TP,5x11mm,5mm	
CC1	2401-000907	C-AL;22uF,20%,16V,GP,TP,5x11mm,5mm	
FC34	2401-001022	C-AL;3.3UF,20%,50V,GP,TP,5X11,5	
FC35	2401-001022	C-AL;3.3UF,20%,50V,GP,TP,5X11,5	
FC36	2401-001022	C-AL;3.3UF,20%,50V,GP,TP,5X11,5	
DC35	2401-001022	C-AL;3.3UF,20%,50V,GP,TP,5X11,5	
DC36	2401-001022	C-AL;3.3UF,20%,50V,GP,TP,5X11,5	
FC1	2401-001022	C-AL;3.3UF,20%,50V,GP,TP,5X11,5	
DC5	2401-001080	C-AL;330nF,20%,50V,GP,5*11,5mm,TP	
DC4	2401-001102	C-AL;330uF,20%,16V,GP,TP,8x11.5mm,5	
FC24	2401-001324	C-AL;0.47UF,20%,50V,GP,BK,3X5,2.5	
RC17	2401-001538	C-AL;47uF,20%,25V,GP,TP,5x11mm,5mm	
RC8	2401-001625	C-AL;6.8uF,20%,50V,GP,TP,5x11,5	
FC31	2401-001912	C-AL;1uF,20%,50V,GP,5*11,5mm,TP	
FC8	2401-001912	C-AL;1uF,20%,50V,GP,5*11,5mm,TP	
FC9	2401-001912	C-AL;1uF,20%,50V,GP,5*11,5mm,TP	
RC7	2401-001912	C-AL;1uF,20%,50V,GP,5*11,5mm,TP	
DC20	2401-001912	C-AL;1uF,20%,50V,GP,5*11,5mm,TP	
FC22	2401-001912	C-AL;1uF,20%,50V,GP,5*11,5mm,TP	
FC23	2401-001912	C-AL;1uF,20%,50V,GP,5*11,5mm,TP	
FC30	2401-001912	C-AL;1uF,20%,50V,GP,5*11,5mm,TP	
RC13	2401-001954	C-AL;4.7uF,20%,50V,GP,TP,5x11mm,5mm	
FC4	2401-001954	C-AL;4.7uF,20%,50V,GP,TP,5x11mm,5mm	
FC33	2401-001954	C-AL;4.7uF,20%,50V,GP,TP,5x11mm,5mm	
FC25	2401-001954	C-AL;4.7uF,20%,50V,GP,TP,5x11mm,5mm	
FC2	2401-001954	C-AL;4.7uF,20%,50V,GP,TP,5x11mm,5mm	
DC32	2401-001975	C-AL;47uF,20%,16V,GP,TP,5x11mm,5mm	
DC21	2401-001975	C-AL;47uF,20%,16V,GP,TP,5x11mm,5mm	
DC2	2401-001975	C-AL;47uF,20%,16V,GP,TP,5x11mm,5mm	
DC12	2401-001975	C-AL;47uF,20%,16V,GP,TP,5x11mm,5mm	
FC18	2401-002180	C-AL;2.2uF,20%,50V,GP,TP,5x11mm,5mm	
FC19	2401-002180	C-AL;2.2uF,20%,50V,GP,TP,5x11mm,5mm	
KC21	2401-002180	C-AL;2.2uF,20%,50V,GP,TP,5x11mm,5mm	
KC6	2401-002180	C-AL;2.2uF,20%,50V,GP,TP,5x11mm,5mm	
KC9	2401-002180	C-AL;2.2uF,20%,50V,GP,TP,5x11mm,5mm	
DC9	2401-002180	C-AL;2.2uF,20%,50V,GP,TP,5x11mm,5mm	
DC27	2401-002180	C-AL;2.2uF,20%,50V,GP,TP,5x11mm,5mm	
DC28	2401-002180	C-AL;2.2uF,20%,50V,GP,TP,5x11mm,5mm	
DC34	2401-002180	C-AL;2.2uF,20%,50V,GP,TP,5x11mm,5mm	
DC6	2401-002180	C-AL;2.2uF,20%,50V,GP,TP,5x11mm,5mm	
DC8	2401-002180	C-AL;2.2uF,20%,50V,GP,TP,5x11mm,5mm	
CL1	2701-000116	INDUCTOR-AXIAL;10uH,10%,4.2x9.8mm	
CL2	2701-000179	INDUCTOR-AXIAL;33uH,10%,4.2x9.8mm	
DL3	2701-000298	INDUCTOR-AXIAL;470uH,10%,4.2x9.8mm	
RF2	3602-000147	FUSE-CLIP;250V,7.5A,30mohm	
	AH92-01857A	**ASSY PCB-POWER/JOG;MAX-KD120,AMP**	
PIC1	1201-001582	IC-POWER AMP;402-070,SIP,15P,-,DUAL,30dB	
PIC2	1201-001856	IC-POWER AMP;STK442-090,SIP,14P,233MIL,S	
PR42	2003-000008	R-METAL OXIDE(S);100ohm,5%,1W,AA,TP,3.3x	
PR41	2003-000008	R-METAL OXIDE(S);100ohm,5%,1W,AA,TP,3.3x	
PR34	2003-000390	R-METAL OXIDE(S);0.27OHM,5%,2W,AA,TP,	
PR33	2003-000390	R-METAL OXIDE(S);0.27OHM,5%,2W,AA,TP,	
PR32	2003-000390	R-METAL OXIDE(S);0.27OHM,5%,2W,AA,TP,	
PR31	2003-000390	R-METAL OXIDE(S);0.27OHM,5%,2W,AA,TP,	
PR6	2003-000578	R-METAL OXIDE(S);220ohm,5%,2W,AA,TP,4x12	

Location no	Code no.	Description Specification	Remarks
PR5	2003-000578	R-METAL OXIDE(S);220ohm,5%,2W,AA,TP,4x12	
PR59	2009-001117	R-METAL PLATE;0.1OHM,5%,5W,CL,BK,5X13X18	
PR58	2009-001117	R-METAL PLATE;0.1OHM,5%,5W,CL,BK,5X13X18	
PR48	2009-001117	R-METAL PLATE;0.1OHM,5%,5W,CL,BK,5X13X18	
PR47	2009-001117	R-METAL PLATE;0.1OHM,5%,5W,CL,BK,5X13X18	
PR46	2009-001117	R-METAL PLATE;0.1OHM,5%,5W,CL,BK,5X13X18	
PR45	2009-001117	R-METAL PLATE;0.1OHM,5%,5W,CL,BK,5X13X18	
PREL2	3501-001197	RELAY-MINIATURE;12VDC,0.54W,44.4MA,1FORM	
PREL1	3501-001197	RELAY-MINIATURE;12VDC,0.54W,44.4MA,1FORM	
PW4	3708-000181	CONNECTOR-FPC/FFC/PIC;16P,1.25mm,STRAIGH	
PW2	3710-001793	CONNECTOR-SOCKET;9P,1R,2.5MM,STRAIGHT,SN	
PW1	3710-001793	CONNECTOR-SOCKET;9P,1R,2.5MM,STRAIGHT,SN	
PCW2	3711-004989	CONNECTOR-HEADER;2WALL,9P,1R,2.5MM,ANGLE	
PCW1	3711-004989	CONNECTOR-HEADER;2WALL,9P,1R,2.5MM,ANGLE	
SPJACK	3716-001196	TERMINAL-BLOCK;-,8P,12.5MM,60V,7A	
PL4	AH27-90001A	COIL-SPRING;-,2.2UH,-,-,-,SPRING,-,-,-,-	
PL5	AH27-90001A	COIL-SPRING;-,2.2UH,-,-,-,SPRING,-,-,-,-	
PL6	AH27-90001A	COIL-SPRING;-,2.2UH,-,-,-,SPRING,-,-,-,-	
PL7	AH27-90001A	COIL-SPRING;-,2.2UH,-,-,-,SPRING,-,-,-,-	
PL8	AH27-90001A	COIL-SPRING;-,2.2UH,-,-,-,SPRING,-,-,-,-	
AL2	AH27-90001A	COIL-SPRING;-,2.2UH,-,-,-,SPRING,-,-,-,-	
AL3	AH27-90001A	COIL-SPRING;-,2.2UH,-,-,-,SPRING,-,-,-,-	
PL1	AH27-90001A	COIL-SPRING;-,2.2UH,-,-,-,SPRING,-,-,-,-	
PL2	AH27-90001A	COIL-SPRING;-,2.2UH,-,-,-,SPRING,-,-,-,-	
PL3	AH27-90001A	COIL-SPRING;-,2.2UH,-,-,-,SPRING,-,-,-,-	
PCW3	AH39-00295A	W/HARNESS UNIT;MAX-L85,-,-,9P,-,-,-,SCN-	
ACW3	AH39-00408A	LEAD CONNECTOR ASSY;MAX-DL44,1007#22,-,2	
PD5	0401-000101	DIODE-SWITCHING;1N4148,100V,200mA,DO-35,	
PD4	0401-000101	DIODE-SWITCHING;1N4148,100V,200mA,DO-35,	
PD3	0401-000101	DIODE-SWITCHING;1N4148,100V,200mA,DO-35,	
PD2	0402-000127	DIODE-RECTIFIER;1N4002,100V,1A,DO-41,TP	
PD1	0402-000127	DIODE-RECTIFIER;1N4002,100V,1A,DO-41,TP	
PZD1	0403-000382	DIODE-ZENER;UZP15B,15V,13.9-15.6V,1W,DO-	
PZD2	0403-000382	DIODE-ZENER;UZP15B,15V,13.9-15.6V,1W,DO-	
PQ9	0501-000296	TR-SMALL SIGNAL;KSA709-Y,PNP,800mW,TO-92	
PQ6	0501-000296	TR-SMALL SIGNAL;KSA709-Y,PNP,800mW,TO-92	
PQ10	0501-000296	TR-SMALL SIGNAL;KSA709-Y,PNP,800mW,TO-92	
PQ5	0501-000331	TR-SMALL SIGNAL;KSC1009-Y,NPN,800mW,TO-9	
PQ8	0501-000331	TR-SMALL SIGNAL;KSC1009-Y,NPN,800mW,TO-9	
PQ17	0501-000369	TR-SMALL SIGNAL;KSC2331-Y,NPN,1000mW,TO-	
PQ16	0501-000369	TR-SMALL SIGNAL;KSC2331-Y,NPN,1000mW,TO-	
PQ15	0501-000407	TR-SMALL SIGNAL;KSD471A-Y,NPN,800mW,TO-9	
PQ2	0501-000407	TR-SMALL SIGNAL;KSD471A-Y,NPN,800mW,TO-9	
PQ3	0501-000407	TR-SMALL SIGNAL;KSD471A-Y,NPN,800mW,TO-9	
PQ4	0501-000407	TR-SMALL SIGNAL;KSD471A-Y,NPN,800mW,TO-9	
PQ1	0501-000407	TR-SMALL SIGNAL;KSD471A-Y,NPN,800mW,TO-9	
PQ11	0501-000407	TR-SMALL SIGNAL;KSD471A-Y,NPN,800mW,TO-9	
PQ12	0501-000407	TR-SMALL SIGNAL;KSD471A-Y,NPN,800mW,TO-9	
PQ14	0501-000407	TR-SMALL SIGNAL;KSD471A-Y,NPN,800mW,TO-9	
PQ7	0504-001003	TR-DIGITAL;KSR2003,PNP,300MW,22K/22K,TO-	
PQ13	0504-001003	TR-DIGITAL;KSR2003,PNP,300MW,22K/22K,TO-	
PR69	2001-000008	R-CARBON;15Kohm,5%,1/8W,AA,TP,1.8x3.2mm	
PR65	2001-000008	R-CARBON;15Kohm,5%,1/8W,AA,TP,1.8x3.2mm	
PR62	2001-000010	R-CARBON;68Kohm,5%,1/8W,AA,TP,1.8x3.2mm	
PR66	2001-000010	R-CARBON;68Kohm,5%,1/8W,AA,TP,1.8x3.2mm	
DR2	2001-000076	R-CARBON;47KOHM,5%,1/4W,AA,TP,2.4X6	
DR1	2001-000076	R-CARBON;47KOHM,5%,1/4W,AA,TP,2.4X6	
PR2	2001-000221	R-CARBON;1.2Kohm,5%,1/8W,AA,TP,1.8x3.2m	
PR3	2001-000221	R-CARBON;1.2Kohm,5%,1/8W,AA,TP,1.8x3.2m	
PR36	2001-000241	R-CARBON;1.5Kohm,5%,1/8W,AA,TP,1.8x3.2m	
PR28	2001-000241	R-CARBON;1.5Kohm,5%,1/8W,AA,TP,1.8x3.2m	
JR22	2001-000241	R-CARBON;1.5Kohm,5%,1/8W,AA,TP,1.8x3.2m	
PR56	2001-000273	R-CARBON;100Kohm,5%,1/8W,AA,TP,1.8x3.2m	
PR57	2001-000273	R-CARBON;100Kohm,5%,1/8W,AA,TP,1.8x3.2m	
PR70	2001-000273	R-CARBON;100Kohm,5%,1/8W,AA,TP,1.8x3.2m	
PR72	2001-000273	R-CARBON;100Kohm,5%,1/8W,AA,TP,1.8x3.2m	
PR1	2001-000273	R-CARBON;100Kohm,5%,1/8W,AA,TP,1.8x3.2m	
PR13	2001-000273	R-CARBON;100Kohm,5%,1/8W,AA,TP,1.8x3.2m	
PR20	2001-000273	R-CARBON;100Kohm,5%,1/8W,AA,TP,1.8x3.2m	
PR4	2001-000273	R-CARBON;100Kohm,5%,1/8W,AA,TP,1.8x3.2m	
PR79	2001-000290	R-CARBON;10Kohm,5%,1/8W,AA,TP,1.8x3.2mm	
PR78	2001-000290	R-CARBON;10Kohm,5%,1/8W,AA,TP,1.8x3.2mm	
PR76	2001-000290	R-CARBON;10Kohm,5%,1/8W,AA,TP,1.8x3.2mm	
PR30	2001-000290	R-CARBON;10Kohm,5%,1/8W,AA,TP,1.8x3.2mm	
PR68	2001-000302	R-CARBON;10ohm,5%,1/8W,AA,TP,1.8x3.2mm	
PR64	2001-000302	R-CARBON;10ohm,5%,1/8W,AA,TP,1.8x3.2mm	
PR51	2001-000429	R-CARBON;1Kohm,5%,1/8W,AA,TP,1.8x3.2mm	
PR81	2001-000429	R-CARBON;1Kohm,5%,1/8W,AA,TP,1.8x3.2mm	
PR82	2001-000429	R-CARBON;1Kohm,5%,1/8W,AA,TP,1.8x3.2mm	
PR84	2001-000429	R-CARBON;1Kohm,5%,1/8W,AA,TP,1.8x3.2mm	
PR85	2001-000429	R-CARBON;1Kohm,5%,1/8W,AA,TP,1.8x3.2mm	
PR15	2001-000429	R-CARBON;1Kohm,5%,1/8W,AA,TP,1.8x3.2mm	
PR18	2001-000429	R-CARBON;1Kohm,5%,1/8W,AA,TP,1.8x3.2mm	
PR19	2001-000429	R-CARBON;1Kohm,5%,1/8W,AA,TP,1.8x3.2mm	
PR24	2001-000429	R-CARBON;1Kohm,5%,1/8W,AA,TP,1.8x3.2mm	
PR50	2001-000429	R-CARBON;1Kohm,5%,1/8W,AA,TP,1.8x3.2mm	
PR77	2001-000522	R-CARBON;22Kohm,5%,1/8W,AA,TP,1.8x3.2mm	
PR74	2001-000522	R-CARBON;22Kohm,5%,1/8W,AA,TP,1.8x3.2mm	
PR67	2001-000522	R-CARBON;22Kohm,5%,1/8W,AA,TP,1.8x3.2mm	
PR63	2001-000522	R-CARBON;22Kohm,5%,1/8W,AA,TP,1.8x3.2mm	
PR53	2001-000660	R-CARBON;33Kohm,5%,1/8W,AA,TP,1.8x3.2mm	
PR71	2001-000734	R-CARBON;4.7Kohm,5%,1/8W,AA,TP,1.8x3.2m	
PR73	2001-000734	R-CARBON;4.7Kohm,5%,1/8W,AA,TP,1.8x3.2m	

Location no	Code no.	Description	Specification	Remarks
PR80	2001-000734	R-CARBON;4.7Kohm,5%,1/8W,AA,TP,1.8x3.2m		
PR83	2001-000734	R-CARBON;4.7Kohm,5%,1/8W,AA,TP,1.8x3.2m		
PR23	2001-000734	R-CARBON;4.7Kohm,5%,1/8W,AA,TP,1.8x3.2m		
JR50	2001-000734	R-CARBON;4.7Kohm,5%,1/8W,AA,TP,1.8x3.2m		
PR16	2001-000734	R-CARBON;4.7Kohm,5%,1/8W,AA,TP,1.8x3.2m		
PR17	2001-000734	R-CARBON;4.7Kohm,5%,1/8W,AA,TP,1.8x3.2m		
PR22	2001-000734	R-CARBON;4.7Kohm,5%,1/8W,AA,TP,1.8x3.2m		
PR61	2001-000780	R-CARBON;470ohm,5%,1/8W,AA,TP,1.8x3.2mm		
PR60	2001-000780	R-CARBON;470ohm,5%,1/8W,AA,TP,1.8x3.2mm		
PR21	2001-000780	R-CARBON;470ohm,5%,1/8W,AA,TP,1.8x3.2mm		
PR14	2001-000780	R-CARBON;470ohm,5%,1/8W,AA,TP,1.8x3.2mm		
PR75	2001-000786	R-CARBON;47Kohm,5%,1/8W,AA,TP,1.8x3.2mm		
PR49	2001-000864	R-CARBON;56Kohm,5%,1/8W,AA,TP,1.8x3.2mm		
PR52	2001-000864	R-CARBON;56Kohm,5%,1/8W,AA,TP,1.8x3.2mm		
PR54	2001-000864	R-CARBON;56Kohm,5%,1/8W,AA,TP,1.8x3.2mm		
PR55	2001-000864	R-CARBON;56Kohm,5%,1/8W,AA,TP,1.8x3.2mm		
PR27	2001-000864	R-CARBON;56Kohm,5%,1/8W,AA,TP,1.8x3.2mm		
PR29	2001-000864	R-CARBON;56Kohm,5%,1/8W,AA,TP,1.8x3.2mm		
PR35	2001-000864	R-CARBON;56Kohm,5%,1/8W,AA,TP,1.8x3.2mm		
PR37	2001-000864	R-CARBON;56Kohm,5%,1/8W,AA,TP,1.8x3.2mm		
PR12	2001-001000	R-CARBON;82Kohm,5%,1/8W,AA,TP,1.8x3.2mm		
PR11	2001-001000	R-CARBON;82Kohm,5%,1/8W,AA,TP,1.8x3.2mm		
PR40	2001-001077	R-CARBON(S);150ohm,5%,1/2W,AA,TP,2.4x6.4		
PR39	2001-001077	R-CARBON(S);150ohm,5%,1/2W,AA,TP,2.4x6.4		
PR25	2003-000008	R-METAL OXIDE(S);100ohm,5%,1W,AA,TP,3.3x		
PR26	2003-000008	R-METAL OXIDE(S);100ohm,5%,1W,AA,TP,3.3x		
PR44	2003-000428	R-METAL OXIDE(S);1.5Kohm,5%,1W,AA,TP,3.3		
PR43	2003-000428	R-METAL OXIDE(S);1.5Kohm,5%,1W,AA,TP,3.3		
PR9	2003-000689	R-METAL OXIDE(S);4.7ohm,5%,1W,AA,TP,3.3x		
PR8	2003-000689	R-METAL OXIDE(S);4.7ohm,5%,1W,AA,TP,3.3x		
PR7	2003-000689	R-METAL OXIDE(S);4.7ohm,5%,1W,AA,TP,3.3x		
PR38	2003-000689	R-METAL OXIDE(S);4.7ohm,5%,1W,AA,TP,3.3x		
PR10	2003-000689	R-METAL OXIDE(S);4.7ohm,5%,1W,AA,TP,3.3x		
PC13	2201-000300	C-CERAMIC,DISC;1NF,20%,50V,Y5T,TP,5X3MM,		
PC12	2201-000300	C-CERAMIC,DISC;1NF,20%,50V,Y5T,TP,5X3MM,		
PC29	2201-000338	C-CERAMIC,DISC;2.2nF,20%,50V,Y5T,TP,5.0x		
PC28	2201-000338	C-CERAMIC,DISC;2.2nF,20%,50V,Y5T,TP,5.0x		
PC57	2201-000532	C-CERAMIC,DISC;4.7NF,10%,50V,Y5P,TP,8X3.		
PC55	2201-000532	C-CERAMIC,DISC;4.7NF,10%,50V,Y5P,TP,8X3.		
PC52	2201-000532	C-CERAMIC,DISC;4.7NF,10%,50V,Y5P,TP,8X3.		
PC51	2201-000532	C-CERAMIC,DISC;4.7NF,10%,50V,Y5P,TP,8X3.		
PC62	2201-000565	C-CERAMIC,DISC;47nF,+80-20%,-,,-,12.5x4m		
PC61	2201-000565	C-CERAMIC,DISC;47nF,+80-20%,-,,-,12.5x4m		
PC60	2201-000565	C-CERAMIC,DISC;47nF,+80-20%,-,,-,12.5x4m		
PC59	2201-000565	C-CERAMIC,DISC;47nF,+80-20%,-,,-,12.5x4m		
PC27	2201-000674	C-CERAMIC,DISC;0.82NF,10%,50V,Y5P,BK,5X3		
PC26	2201-000674	C-CERAMIC,DISC;0.82NF,10%,50V,Y5P,BK,5X3		
PC5	2201-000783	C-CERAMIC,DISC;100NF,+80-20%,50V,Y5V,TP,		
PC4	2201-000783	C-CERAMIC,DISC;100NF,+80-20%,50V,Y5V,TP,		
PC35	2201-000838	C-CERAMIC,DISC;0.003NF,0.25PF,50V,C0G,TP		
PC33	2201-000838	C-CERAMIC,DISC;0.003NF,0.25PF,50V,C0G,TP		
PC14	2201-000838	C-CERAMIC,DISC;0.003NF,0.25PF,50V,C0G,TP		
PC10	2201-000838	C-CERAMIC,DISC;0.003NF,0.25PF,50V,C0G,TP		
PC38	2202-000806	C-CERAMIC,MLC-AXIAL;220pF,10%,50V,Y5P,TP		
PC34	2202-000806	C-CERAMIC,MLC-AXIAL;220pF,10%,50V,Y5P,TP		
PC15	2202-000806	C-CERAMIC,MLC-AXIAL;220pF,10%,50V,Y5P,TP		
PC11	2202-000806	C-CERAMIC,MLC-AXIAL;220pF,10%,50V,Y5P,TP		
PC8	2301-000375	C-FILM,PEF;100nF,10%,TP,50V,11x12.5x6.5,		
PC3	2301-000375	C-FILM,PEF;100nF,10%,TP,50V,11x12.5x6.5,		
PC7	2301-000379	C-FILM,PEF;10nF,10%,50V,TP,6x12x3.5mm,-		
PC16	2301-000379	C-FILM,PEF;10nF,10%,50V,TP,6x12x3.5mm,-		
PC9	2401-000325	C-AL;100uF,20%,35V,GP,-,8x11.5,3.5m		
PC50	2401-000325	C-AL;100uF,20%,35V,GP,-,8x11.5,3.5m		
PC21	2401-000325	C-AL;100uF,20%,35V,GP,-,8x11.5,3.5m		
PC20	2401-000325	C-AL;100uF,20%,35V,GP,-,8x11.5,3.5m		
PC25	2401-000357	C-AL;100UF,0.2,50V,GP,8*12,5MM,SSL		
PC24	2401-000357	C-AL;100UF,0.2,50V,GP,8*12,5MM,SSL		
PC23	2401-000357	C-AL;100UF,0.2,50V,GP,8*12,5MM,SSL		
PC22	2401-000357	C-AL;100UF,0.2,50V,GP,8*12,5MM,SSL		
PC19	2401-000475	C-AL;10uF,20%,50V,GP,TP,5x11mm,5mm		
PC18	2401-000475	C-AL;10uF,20%,50V,GP,TP,5x11mm,5mm		
PC80	2401-000970	C-AL;22uF,20%,50V,WT,TP,5x11,5		
PC17	2401-001164	C-AL;33uF,20%,16V,GP,TP,5x11mm,5mm		
PC8	2401-001164	C-AL;33uF,20%,16V,GP,TP,5x11mm,5mm		
PC100	2401-001538	C-AL;47uF,20%,25V,GP,TP,5x11mm,5mm		
PC1	2401-001893	C-AL;100uF,20%,16V,GP,6*7,5MM,TP		
PC36	2401-001893	C-AL;100uF,20%,16V,GP,6*7,5MM,TP		
PC37	2401-001893	C-AL;100uF,20%,16V,GP,6*7,5MM,TP		
PC32	2401-002180	C-AL;2.2uF,20%,50V,GP,TP,5x11mm,5mm		
PC31	2401-002180	C-AL;2.2uF,20%,50V,GP,TP,5x11mm,5mm		
	AH92-01858A	**ASSY PCB-POWER;MAX-KD120,POWER**		
PD3	0402-000157	DIODE-RECTIFIER;1N5402,200V,3A,DO-201AD,		
PD2	0402-000157	DIODE-RECTIFIER;1N5402,200V,3A,DO-201AD,		
PD1	0402-001258	DIODE-BRIDGE;GBU606,600V,6A,SIP-4,BK		
PQ5	0502-000303	TR-POWER;KSD882,NPN,1W,TO-126,TP,160-32		
PIC5	1201-000191	IC-OP AMP;4558,DIP,8P,300MIL,DUAL,20V/mV		
PIC2	1203-001006	IC-VOLTAGE REGULATOR;78R05,TO-220F,4P,-,		
PIC3	1203-001586	IC-VOLTAGE REGULATOR;278R33,TO-220F,4P,-		
PIC4	1203-001589	IC-POSI.FIXED REG.;278R05,TO-220F,4P,-,P		
PR72	2003-000710	R-METAL OXIDE(S);47ohm,5%,2W,AA,TP,4x12m		
PR26	2003-000710	R-METAL OXIDE(S);47ohm,5%,2W,AA,TP,4x12m		
PR10	2003-000710	R-METAL OXIDE(S);47ohm,5%,2W,AA,TP,4x12m		

Location no	Code no.	Description	Specification	Remarks
PC20	2401-001633	C-AL;6800uF,20%,25V,GP,BK,18x35.5,7		
PC5	2401-001633	C-AL;6800uF,20%,25V,GP,BK,18x35.5,7		
PC19	2401-001882	C-AL;1000uF,20%,16V,LZ,-,10x20,-		
PC6	2401-001923	C-AL;2200UF,20%,16V,GP,BK,12.5X16,5		
LFU2	3601-000282	FUSE;250V,4A,TIME-LAG,GLASS,5.2x20m		
PCW3	3711-000629	CONNECTOR-HEADER;BOX,11P,2R,2.5MM,STRAIG		
PCW7	3711-000820	CONNECTOR-HEADER;BOX,2P,1R,2.5MM,STRAIGH		
PCW1	3711-000820	CONNECTOR-HEADER;BOX,2P,1R,2.5MM,STRAIGH		
PCW5	3711-000827	CONNECTOR-HEADER;BOX,2P,1R,2mm,STRAIGHT,		
PCW4	3711-003107	CONNECTOR-HEADER;BOX,3P,1R,2.5mm,STRAIGH		
PCW6	AH39-00060A	LEAD CONNECTOR ASSY;-,51015-08,51004-08,		
PCW2	AH39-00096B	LEAD CONNECTOR ASSY;RXD-DV9,#1007,28,AWG		
PD5	0401-000101	DIODE-SWITCHING;1N4148,100V,200mA,DO-35,		
PD4	0401-000101	DIODE-SWITCHING;1N4148,100V,200mA,DO-35,		
PC10	0402-000127	DIODE-RECTIFIER;1N4002,100V,1A,DO-41,TP		
PQ8	0501-000010	TR-SMALL SIGNAL;KSC1008,NPN,800mW,TO-92,		
PQ7	0501-000010	TR-SMALL SIGNAL;KSC1008,NPN,800mW,TO-92,		
PQ6	0501-000303	TR-SMALL SIGNAL;KSA733,PNP,250mW,TO-92,T		
PQ4	0501-000398	TR-SMALL SIGNAL;KSC945,NPN,250mW,TO-92,T		
PQ2	0501-000398	TR-SMALL SIGNAL;KSC945,NPN,250mW,TO-92,T		
PQ3	0501-000610	TR-SMALL SIGNAL;KSA928A-Y,PNP,1W,TO-92L,		
PQ1	0501-000610	TR-SMALL SIGNAL;KSA928A-Y,PNP,1W,TO-92L,		
PR17	2001-000003	R-CARBON;330ohm,5%,1/8W,AA,TP,1.8x3.2mm		
PR11	2001-000010	R-CARBON;68Kohm,5%,1/8W,AA,TP,1.8x3.2mm		
PR8	2001-000273	R-CARBON;100Kohm,5%,1/8W,AA,TP,1.8x3.2m		
PR14	2001-000273	R-CARBON;100Kohm,5%,1/8W,AA,TP,1.8x3.2m		
PR12	2001-000273	R-CARBON;100Kohm,5%,1/8W,AA,TP,1.8x3.2m		
PR22	2001-000290	R-CARBON;10Kohm,5%,1/8W,AA,TP,1.8x3.2mm		
PR19	2001-000290	R-CARBON;10Kohm,5%,1/8W,AA,TP,1.8x3.2mm		
PR18	2001-000290	R-CARBON;10Kohm,5%,1/8W,AA,TP,1.8x3.2mm		
PR15	2001-000290	R-CARBON;10Kohm,5%,1/8W,AA,TP,1.8x3.2mm		
PR13	2001-000290	R-CARBON;10Kohm,5%,1/8W,AA,TP,1.8x3.2mm		
PR3R	2001-000331	R-CARBON;12Kohm,5%,1/8W,AA,TP,1.8x3.2mm		
PR3L	2001-000331	R-CARBON;12Kohm,5%,1/8W,AA,TP,1.8x3.2mm		
PR7	2001-000429	R-CARBON;1Kohm,5%,1/8W,AA,TP,1.8x3.2mm		
PR21	2001-000435	R-CARBON;1Mohm,5%,1/8W,AA,TP,1.8x3.2mm		
RR1R	2001-000449	R-CARBON;2.2Kohm,5%,1/8W,AA,TP,1.8x3.2m		
PR1L	2001-000449	R-CARBON;2.2Kohm,5%,1/8W,AA,TP,1.8x3.2m		
PR24	2001-000613	R-CARBON;3.9Kohm,5%,1/8W,AA,TP,1.8x3.2m		
PR23	2001-000613	R-CARBON;3.9Kohm,5%,1/8W,AA,TP,1.8x3.2m		
PR6	2001-000786	R-CARBON;47Kohm,5%,1/8W,AA,TP,1.8x3.2mm		
PR5	2001-000786	R-CARBON;47Kohm,5%,1/8W,AA,TP,1.8x3.2mm		
PR2R	2001-000786	R-CARBON;47Kohm,5%,1/8W,AA,TP,1.8x3.2mm		
PR2L	2001-000786	R-CARBON;47Kohm,5%,1/8W,AA,TP,1.8x3.2mm		
PR20	2001-000802	R-CARBON;5.6Kohm,5%,1/8W,AA,TP,1.8x3.2m		
PR16	2001-000869	R-CARBON;56ohm,5%,1/8W,AA,TP,1.8x3.2mm		
PR9	2001-000977	R-CARBON;8.2KOHM,5%,1/8W,AA,TP,1.8x3.2m		
PR4R	2001-000977	R-CARBON;8.2KOHM,5%,1/8W,AA,TP,1.8x3.2m		
PR4L	2001-000977	R-CARBON;8.2KOHM,5%,1/8W,AA,TP,1.8x3.2m		
GR52	2001-001144	R-CARBON(S);4.7Kohm,5%,1/2W,AA,TP,2.4x6.		
PC2R	2202-000781	C-CERAMIC,MLC-AXIAL;100pF,10%,50V,Y5P,TP		
PC2L	2202-000781	C-CERAMIC,MLC-AXIAL;100pF,10%,50V,Y5P,TP		
PC8	2401-000240	C-AL;100uF,20%,10V,GP,TP,5x11,5		
PC11	2401-000240	C-AL;100uF,20%,10V,GP,TP,5x11,5		
PC14	2401-001364	C-AL;470uF,20%,16V,GP,TP,10x12.5,5		
PC18	2401-001538	C-AL;47uF,20%,25V,GP,TP,5x11mm,5mm		
PC17	2401-001538	C-AL;47uF,20%,25V,GP,TP,5x11mm,5mm		
PC12	2401-001893	C-AL;100uF,20%,16V,GP,6*7,5MM,TP		
PC3R	2401-001954	C-AL;4.7uF,20%,50V,GP,TP,5x11mm,5mm		
PC3L	2401-001954	C-AL;4.7uF,20%,50V,GP,TP,5x11mm,5mm		
PC1R	2401-001954	C-AL;4.7uF,20%,50V,GP,TP,5x11mm,5mm		
PC1L	2401-001954	C-AL;4.7uF,20%,50V,GP,TP,5x11mm,5mm		
PC16	2401-001975	C-AL;47uF,20%,16V,GP,TP,5x11mm,5mm		
PC15	2401-001975	C-AL;47uF,20%,16V,GP,TP,5x11mm,5mm		
PL1	2701-000116	INDUCTOR-AXIAL;10uH,10%,4.2x9.8mm		
PFU1*2	3602-000147	FUSE-CLIP;250V,7.5A,30mohm		
	AH92-01859A	**ASSY PCB-JOG;MAX-KD120,JOG**		
JLD4	0601-001490	LED;INVERTER,BLUE,3MM,465-477NM		
JLD5	0601-001490	LED;INVERTER,BLUE,3MM,465-477NM		
JLD6	0601-001490	LED;INVERTER,BLUE,3MM,465-477NM		
JLD7	0601-001490	LED;INVERTER,BLUE,3MM,465-477NM		
JLD8	0601-001490	LED;INVERTER,BLUE,3MM,465-477NM		
JLD9	0601-001490	LED;INVERTER,BLUE,3MM,465-477NM		
JLD1	0601-001490	LED;INVERTER,BLUE,3MM,465-477NM		
JLD10	0601-001490	LED;INVERTER,BLUE,3MM,465-477NM		
JLD11	0601-001490	LED;INVERTER,BLUE,3MM,465-477NM		
JLD12	0601-001490	LED;INVERTER,BLUE,3MM,465-477NM		
JLD2	0601-001490	LED;INVERTER,BLUE,3MM,465-477NM		
JLD3	0601-001490	LED;INVERTER,BLUE,3MM,465-477NM		
JVR1	3406-001054	SWITCH-ROTARY;5V DC,0.5mA,-,7.5mm		
JCW1	3708-000452	CONNECTOR-FPC/FFC/PIC;19P,1.25mm,STRAIGH		
JQ4	0501-000341	TR-SMALL SIGNAL;KSC1623-L,NPN,200mW,SOT-		
JQ5	0501-000341	TR-SMALL SIGNAL;KSC1623-L,NPN,200mW,SOT-		
JQ6	0501-000341	TR-SMALL SIGNAL;KSC1623-L,NPN,200mW,SOT-		
JQ7	0501-000341	TR-SMALL SIGNAL;KSC1623-L,NPN,200mW,SOT-		
JQ8	0501-000341	TR-SMALL SIGNAL;KSC1623-L,NPN,200mW,SOT-		
JQ9	0501-000341	TR-SMALL SIGNAL;KSC1623-L,NPN,200mW,SOT-		
JQ1	0501-000341	TR-SMALL SIGNAL;KSC1623-L,NPN,200mW,SOT-		
JQ10	0501-000341	TR-SMALL SIGNAL;KSC1623-L,NPN,200mW,SOT-		
JQ11	0501-000341	TR-SMALL SIGNAL;KSC1623-L,NPN,200mW,SOT-		
JQ3	0501-000341	TR-SMALL SIGNAL;KSC1623-L,NPN,200mW,SOT-		
JQ2	0501-000341	TR-SMALL SIGNAL;KSC1623-L,NPN,200mW,SOT-		

Location no	Code no.	Description Specification	Remarks
JQ12	0501-000341	TR-SMALL SIGNAL;KSC1623-L,NPN,200mW,SOT-	
JJW33	2007-000029	R-CHIP;0ohm,5%,1/8W,TP,2012	
JJW34	2007-000029	R-CHIP;0ohm,5%,1/8W,TP,2012	
JJW35	2007-000029	R-CHIP;0ohm,5%,1/8W,TP,2012	
JJW36	2007-000029	R-CHIP;0ohm,5%,1/8W,TP,2012	
JJW37	2007-000029	R-CHIP;0ohm,5%,1/8W,TP,2012	
JJW29	2007-000029	R-CHIP;0ohm,5%,1/8W,TP,2012	
JJW3	2007-000029	R-CHIP;0ohm,5%,1/8W,TP,2012	
JJW30	2007-000029	R-CHIP;0ohm,5%,1/8W,TP,2012	
JJW31	2007-000029	R-CHIP;0ohm,5%,1/8W,TP,2012	
JJW32	2007-000029	R-CHIP;0ohm,5%,1/8W,TP,2012	
JJW38	2007-000029	R-CHIP;0ohm,5%,1/8W,TP,2012	
JJW5	2007-000029	R-CHIP;0ohm,5%,1/8W,TP,2012	
JJW6	2007-000029	R-CHIP;0ohm,5%,1/8W,TP,2012	
JJW7	2007-000029	R-CHIP;0ohm,5%,1/8W,TP,2012	
JJW8	2007-000029	R-CHIP;0ohm,5%,1/8W,TP,2012	
JJW9	2007-000029	R-CHIP;0ohm,5%,1/8W,TP,2012	
JJW39	2007-000029	R-CHIP;0ohm,5%,1/8W,TP,2012	
JJW4	2007-000029	R-CHIP;0ohm,5%,1/8W,TP,2012	
JJW40	2007-000029	R-CHIP;0ohm,5%,1/8W,TP,2012	
JJW41	2007-000029	R-CHIP;0ohm,5%,1/8W,TP,2012	
JJW42	2007-000029	R-CHIP;0ohm,5%,1/8W,TP,2012	
JJW14	2007-000029	R-CHIP;0ohm,5%,1/8W,TP,2012	
JJW15	2007-000029	R-CHIP;0ohm,5%,1/8W,TP,2012	
JJW16	2007-000029	R-CHIP;0ohm,5%,1/8W,TP,2012	
JJW17	2007-000029	R-CHIP;0ohm,5%,1/8W,TP,2012	
JJW18	2007-000029	R-CHIP;0ohm,5%,1/8W,TP,2012	
JJW1	2007-000029	R-CHIP;0ohm,5%,1/8W,TP,2012	
JJW10	2007-000029	R-CHIP;0ohm,5%,1/8W,TP,2012	
JJW11	2007-000029	R-CHIP;0ohm,5%,1/8W,TP,2012	
JJW12	2007-000029	R-CHIP;0ohm,5%,1/8W,TP,2012	
JJW13	2007-000029	R-CHIP;0ohm,5%,1/8W,TP,2012	
JJW19	2007-000029	R-CHIP;0ohm,5%,1/8W,TP,2012	
JJW24	2007-000029	R-CHIP;0ohm,5%,1/8W,TP,2012	
JJW25	2007-000029	R-CHIP;0ohm,5%,1/8W,TP,2012	
JJW26	2007-000029	R-CHIP;0ohm,5%,1/8W,TP,2012	
JJW27	2007-000029	R-CHIP;0ohm,5%,1/8W,TP,2012	
JJW28	2007-000029	R-CHIP;0ohm,5%,1/8W,TP,2012	
JJW2	2007-000029	R-CHIP;0ohm,5%,1/8W,TP,2012	
JJW20	2007-000029	R-CHIP;0ohm,5%,1/8W,TP,2012	
JJW21	2007-000029	R-CHIP;0ohm,5%,1/8W,TP,2012	
JJW22	2007-000029	R-CHIP;0ohm,5%,1/8W,TP,2012	
JJW23	2007-000029	R-CHIP;0ohm,5%,1/8W,TP,2012	
JR8	2007-000221	R-CHIP;1.2Kohm,5%,1/8W,TP,2012	
JR9	2007-000241	R-CHIP;1.5Kohm,5%,1/8W,TP,2012	
JR32	2007-000267	R-CHIP;1.8Kohm,5%,1/8W,TP,2012	
JR13	2007-000267	R-CHIP;1.8Kohm,5%,1/8W,TP,2012	
JR87	2007-000300	R-CHIP;10Kohm,5%,1/8W,TP,2012	
JR88	2007-000300	R-CHIP;10Kohm,5%,1/8W,TP,2012	
JR89	2007-000300	R-CHIP;10Kohm,5%,1/8W,TP,2012	
JR90	2007-000300	R-CHIP;10Kohm,5%,1/8W,TP,2012	
JR91	2007-000300	R-CHIP;10Kohm,5%,1/8W,TP,2012	
JR92	2007-000300	R-CHIP;10Kohm,5%,1/8W,TP,2012	
JR86	2007-000300	R-CHIP;10Kohm,5%,1/8W,TP,2012	
JR27	2007-000300	R-CHIP;10Kohm,5%,1/8W,TP,2012	
JR81	2007-000300	R-CHIP;10Kohm,5%,1/8W,TP,2012	
JR82	2007-000300	R-CHIP;10Kohm,5%,1/8W,TP,2012	
JR85	2007-000300	R-CHIP;10Kohm,5%,1/8W,TP,2012	
JR84	2007-000300	R-CHIP;10Kohm,5%,1/8W,TP,2012	
JR83	2007-000300	R-CHIP;10Kohm,5%,1/8W,TP,2012	
JR38	2007-000468	R-CHIP;1Kohm,5%,1/8W,TP,2012	
JR34	2007-000493	R-CHIP;2.2Kohm,5%,1/8W,TP,2012	
JR15	2007-000493	R-CHIP;2.2Kohm,5%,1/8W,TP,2012	
JR26	2007-000572	R-CHIP;220ohm,5%,1/8W,TP,2012	
JR28	2007-000572	R-CHIP;220ohm,5%,1/8W,TP,2012	
JR3	2007-000572	R-CHIP;220ohm,5%,1/8W,TP,2012	
JR33	2007-000572	R-CHIP;220ohm,5%,1/8W,TP,2012	
JR35	2007-000572	R-CHIP;220ohm,5%,1/8W,TP,2012	
JR5	2007-000572	R-CHIP;220ohm,5%,1/8W,TP,2012	
JR10	2007-000572	R-CHIP;220ohm,5%,1/8W,TP,2012	
JR12	2007-000572	R-CHIP;220ohm,5%,1/8W,TP,2012	
JR14	2007-000572	R-CHIP;220ohm,5%,1/8W,TP,2012	
JR22	2007-000572	R-CHIP;220ohm,5%,1/8W,TP,2012	
JR20	2007-000572	R-CHIP;220ohm,5%,1/8W,TP,2012	
JR18	2007-000572	R-CHIP;220ohm,5%,1/8W,TP,2012	
JR30	2007-000586	R-CHIP;22Kohm,5%,1/8W,TP,2012	
JR17	2007-000686	R-CHIP;3.3Kohm,5%,1/8W,TP,2012	
JR21	2007-000872	R-CHIP;4.7Kohm,5%,1/8W,TP,2012	
JR31	2007-001039	R-CHIP;56Kohm,5%,1/8W,TP,2012	
JR23	2007-001071	R-CHIP;6.8Kohm,5%,1/8W,TP,2012	
JR4	2007-001198	R-CHIP;820ohm,1%,1/8W,TP,2012	
JRC87	2203-000257	C-CERAMIC,CHIP;10nF,10%,50V,X7R,TP,1608	
JRC88	2203-000257	C-CERAMIC,CHIP;10nF,10%,50V,X7R,TP,1608	
JRC89	2203-000257	C-CERAMIC,CHIP;10nF,10%,50V,X7R,TP,1608	
JRC90	2203-000257	C-CERAMIC,CHIP;10nF,10%,50V,X7R,TP,1608	
JRC91	2203-000257	C-CERAMIC,CHIP;10nF,10%,50V,X7R,TP,1608	
JRC92	2203-000257	C-CERAMIC,CHIP;10nF,10%,50V,X7R,TP,1608	
JRC81	2203-000257	C-CERAMIC,CHIP;10nF,10%,50V,X7R,TP,1608	
JRC82	2203-000257	C-CERAMIC,CHIP;10nF,10%,50V,X7R,TP,1608	
JRC83	2203-000257	C-CERAMIC,CHIP;10nF,10%,50V,X7R,TP,1608	
JRC84	2203-000257	C-CERAMIC,CHIP;10nF,10%,50V,X7R,TP,1608	
JRC85	2203-000257	C-CERAMIC,CHIP;10nF,10%,50V,X7R,TP,1608	
JRC86	2203-000257	C-CERAMIC,CHIP;10nF,10%,50V,X7R,TP,1608	

Location no	Code no.	Description Specification	Remarks
JC2	2203-001537	C-CERAMIC,CHIP;1nF,10%,50V,X7R,TP,2012	
JC1	2203-001537	C-CERAMIC,CHIP;1nF,10%,50V,X7R,TP,2012	
JSW4	3404-000165	SWITCH-TACT;12V,50mA,160gf,6x6mm,SPST	
JSW5	3404-000165	SWITCH-TACT;12V,50mA,160gf,6x6mm,SPST	
JSW6	3404-000165	SWITCH-TACT;12V,50mA,160gf,6x6mm,SPST	
JSW7	3404-000165	SWITCH-TACT;12V,50mA,160gf,6x6mm,SPST	
JSW8	3404-000165	SWITCH-TACT;12V,50mA,160gf,6x6mm,SPST	
JSW9	3404-000165	SWITCH-TACT;12V,50mA,160gf,6x6mm,SPST	
JSW3	3404-000165	SWITCH-TACT;12V,50mA,160gf,6x6mm,SPST	
JSW1	3404-000165	SWITCH-TACT;12V,50mA,160gf,6x6mm,SPST	
JSW10	3404-000165	SWITCH-TACT;12V,50mA,160gf,6x6mm,SPST	
JSW11	3404-000165	SWITCH-TACT;12V,50mA,160gf,6x6mm,SPST	
JSW12	3404-000165	SWITCH-TACT;12V,50mA,160gf,6x6mm,SPST	
JSW13	3404-000165	SWITCH-TACT;12V,50mA,160gf,6x6mm,SPST	
JSW2	3404-000165	SWITCH-TACT;12V,50mA,160gf,6x6mm,SPST	
	AH97-00900V	**ASSY-CA'DECK;-,MAXDN54/55/64/65/67,ASSY**	
	3809-001188	CABLE-FLAT;30V,80C,240mm,16P,1.25mm,UL28	
	6002-000396	SCREW-TAPPING;BH,+,2,M2,L5,ZPC(WHT),SWCH	
	AH39-00021A	LEAD CONNECTOR ASSY;UL1533#28,300MM,-,-,	
	AH39-00052N	LEAD CONNECTOR ASSY;RX-DV9,#1007,28AWG,-	
	AH59-01143A	DECK-CASSETTE;ADR268FTW,MAXWB650,-,-,DC1	
	AH81-00101A	A/S-BELT SUB;ADR2400S,34.7,6602-001055,-	
	AH81-00102A	A/S-SOLENOID;ADR2400-1,MT75-00049A,-,-,-	
	AH81-00364A	A/S-BELT MAIN1;ADR246DSW,6602-001056,-,-	
	AH81-00369A	A/S-ASSY PB HEAD;ADR246FTW,MT59-00044A,-	
	AH81-00370A	A/S-BELT MAIN2;ADR246FTW,6602-001010,-,-	
	AH81-00422A	A/S-ASSY MOTOR;ADR246DSW,MT91-15013Y,-,-	
	AH81-01029A	A/S PART-R/P HEAD ASSY;MAXB450,MT91-1101	
	AH61-00413B	BRACKET-DECK;MAX-B550,SPTE 0.3T,0.3T,-,-	

4. Block Diagram

4-1-1 MAIN (MAX-KD100/ MAX-KD110)

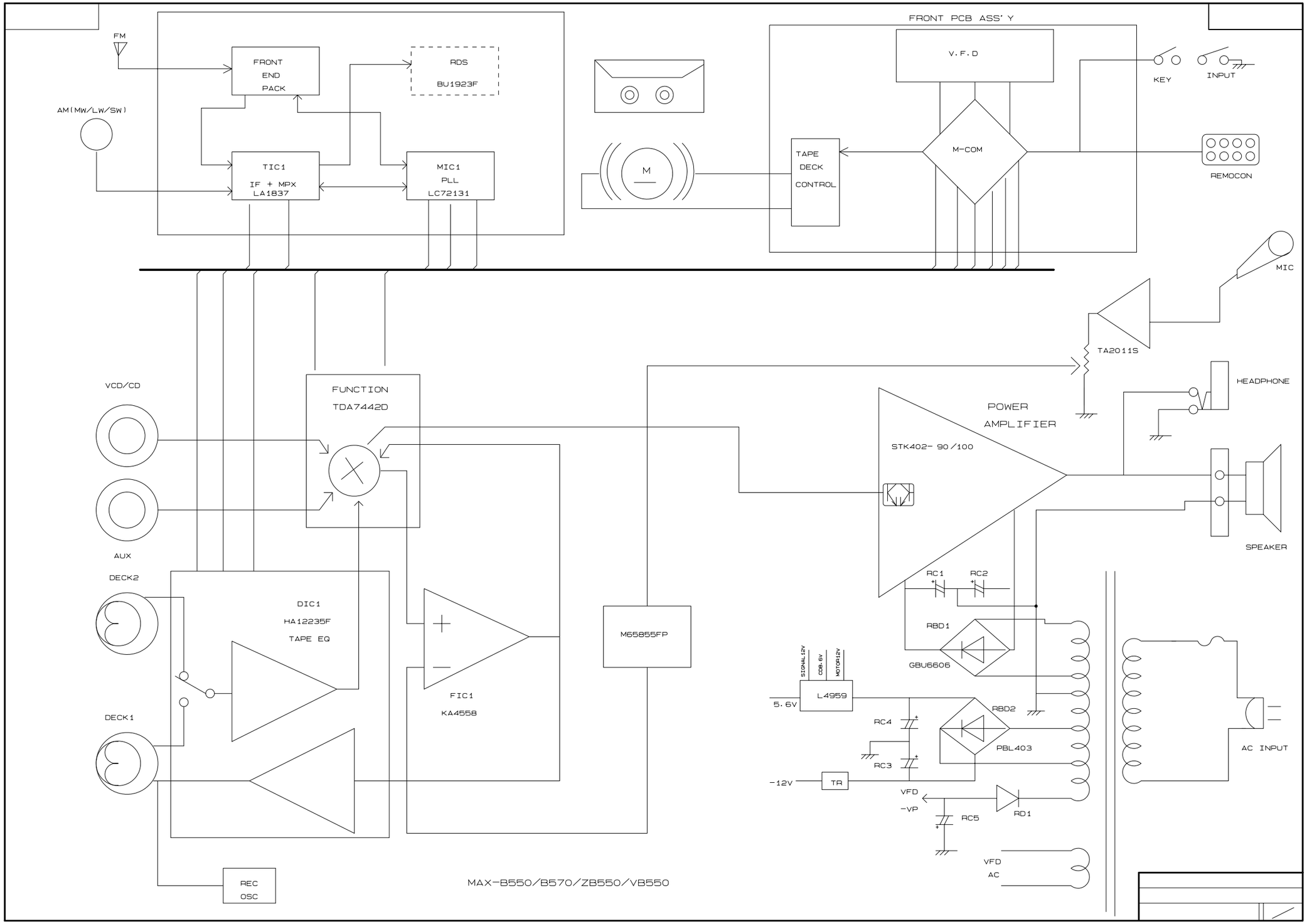

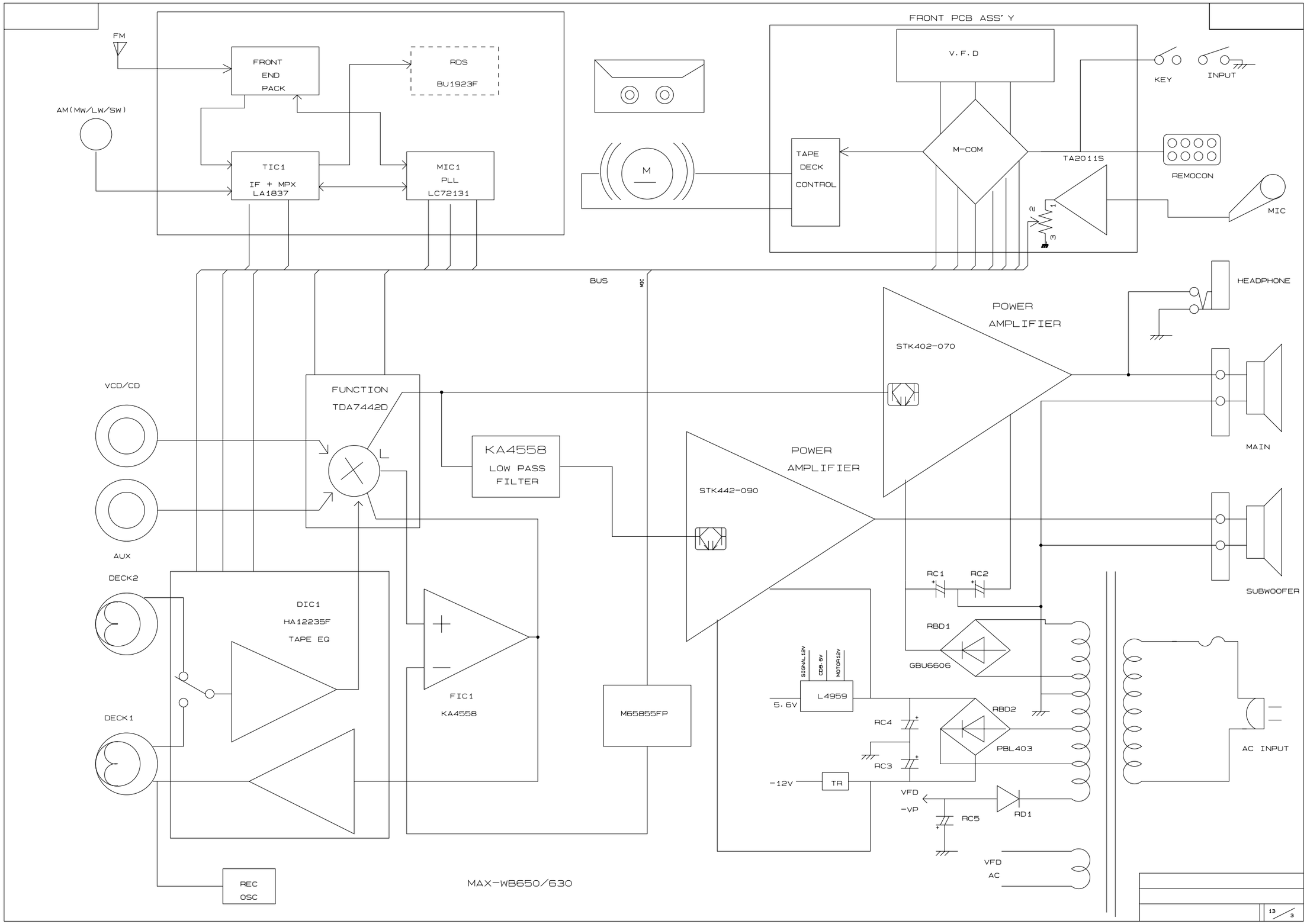
FM
AM(MW/LW/SW)
FRONT END PACK
RDS BU1923F
TIC1 IF + MPX LA1837
MIC1 PLL LC72131
FRONT PCB ASS'Y
V.F.D
KEY
INPUT
M
TAPE DECK CONTROL
M-COM
TA2011S
REMOCON
MIC
BUS
MIC
HEADPHONE
POWER AMPLIFIER
STK402-070
VCD/CD
FUNCTION TDA7442D
L
KA4558 LOW PASS FILTER
POWER AMPLIFIER
STK442-090
MAIN
AUX
DECK2
DIC1 HA12235F TAPE EQ
FIC1 KA4558
M65855FP
RC1
RC2
SUBWOOFER
RBD1
GBU6606
SIGNAL12V
CDB.6V
MOTOR12V
L4959
5.6V
RC4
RBD2
PBL403
AC INPUT
DECK1
RC3
-12V
TR
VFD
-VP
RC5
RD1
VFD AC
REC OSC
MAX-WB650/630
13/3

DVD KARAOKE BLOCK DIAGRAM

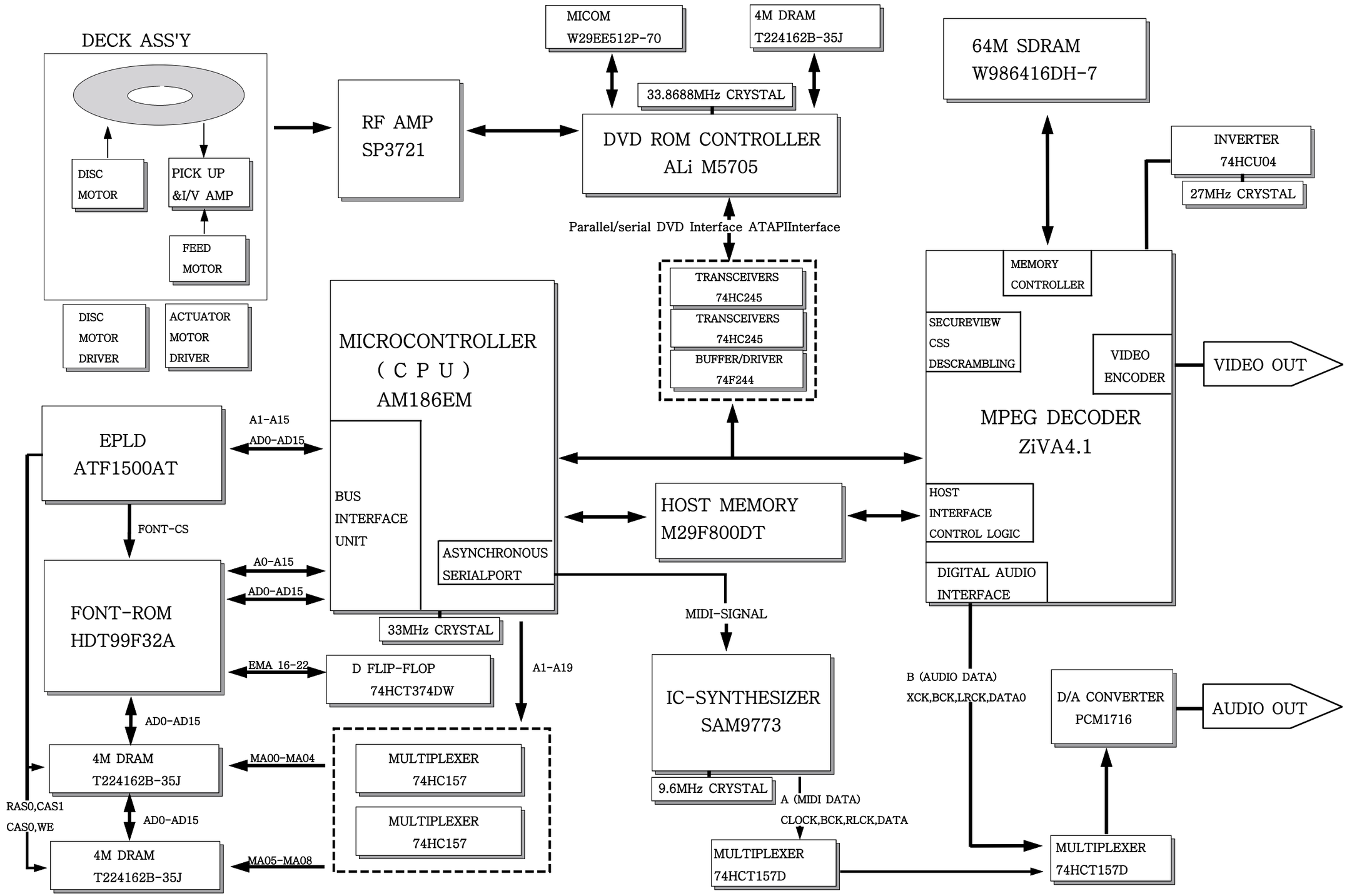

5. PCB Diagram

5-1 MAIN

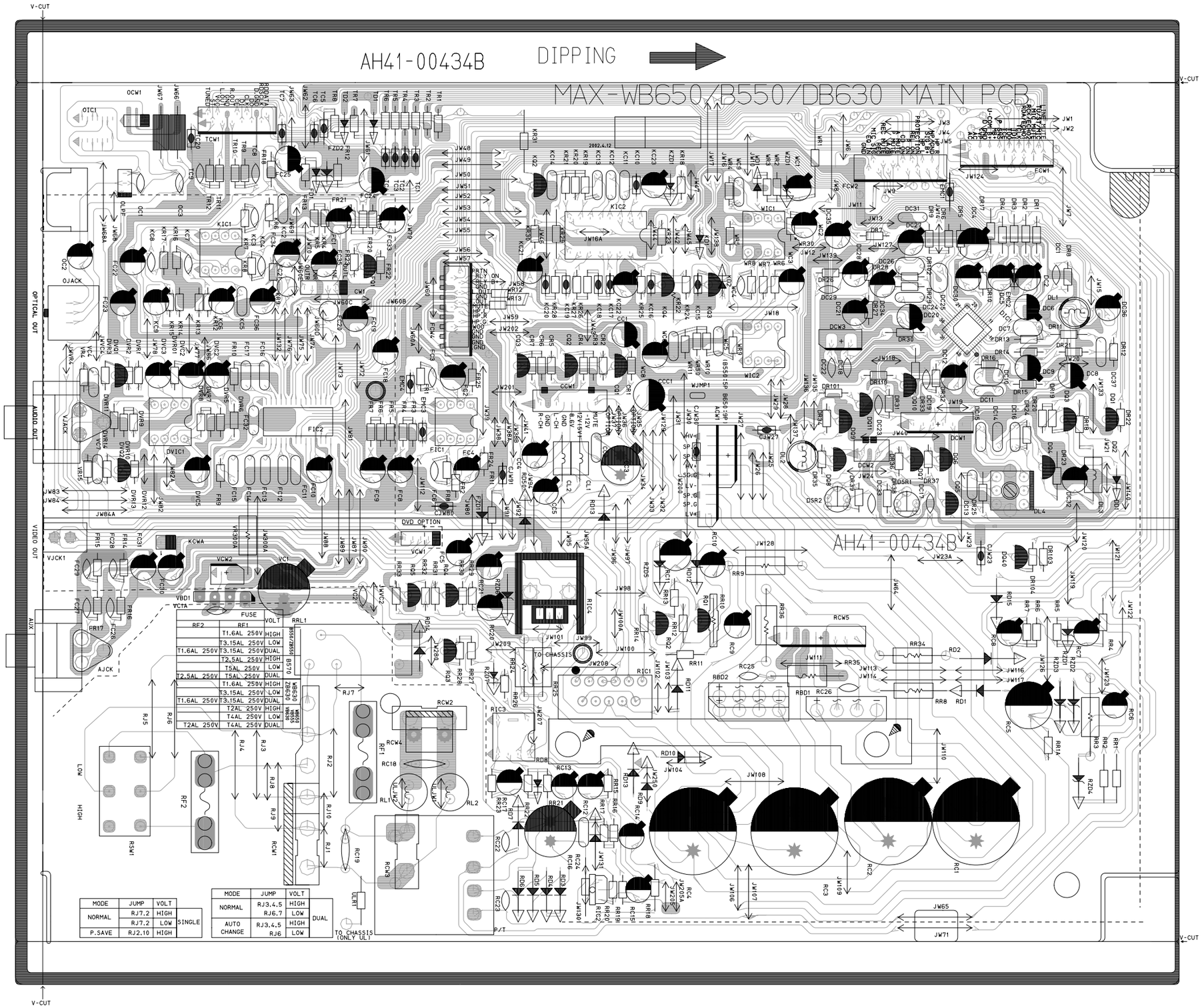

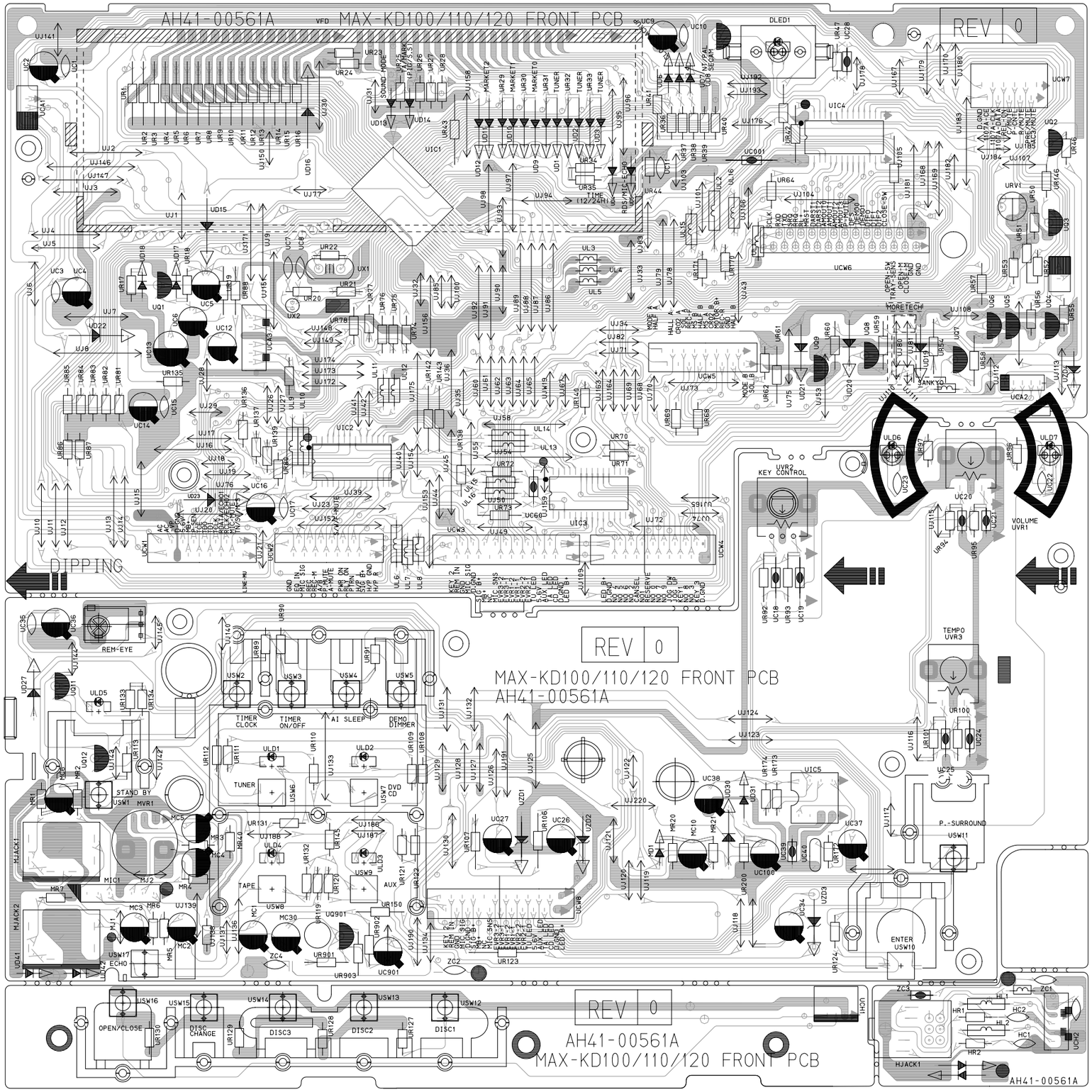
AH41-00561A MAX-KD100/110/120 FRONT PCB
REV 0
DIPPING
KEY CONTROL
VOLUME
TEMPO
REM-EYE
TIMER CLOCK
TIMER ON/OFF
AI SLEEP
DEMO DIMMER
STAND BY
TUNER
DVD CD
TAPE
AUX
P.-SURROUND
ENTER
OPEN/CLOSE
DISC CHANGE
DISC3
DISC2
DISC1
YANKYO
MORETECH

5-3 JOG

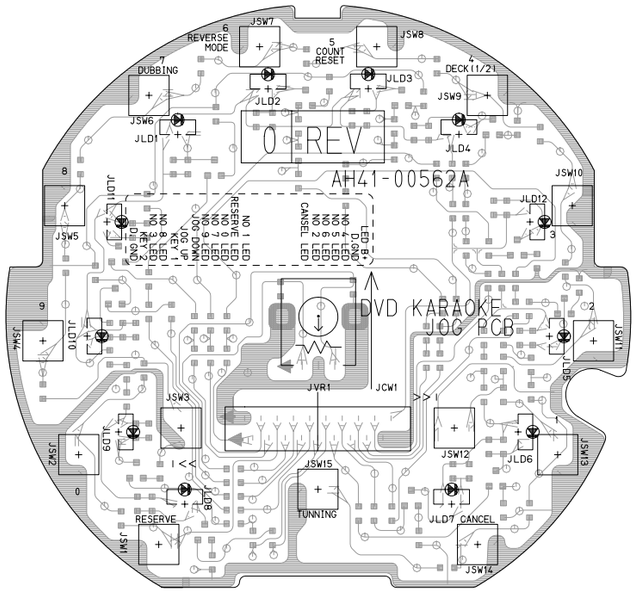

5-4 POWER

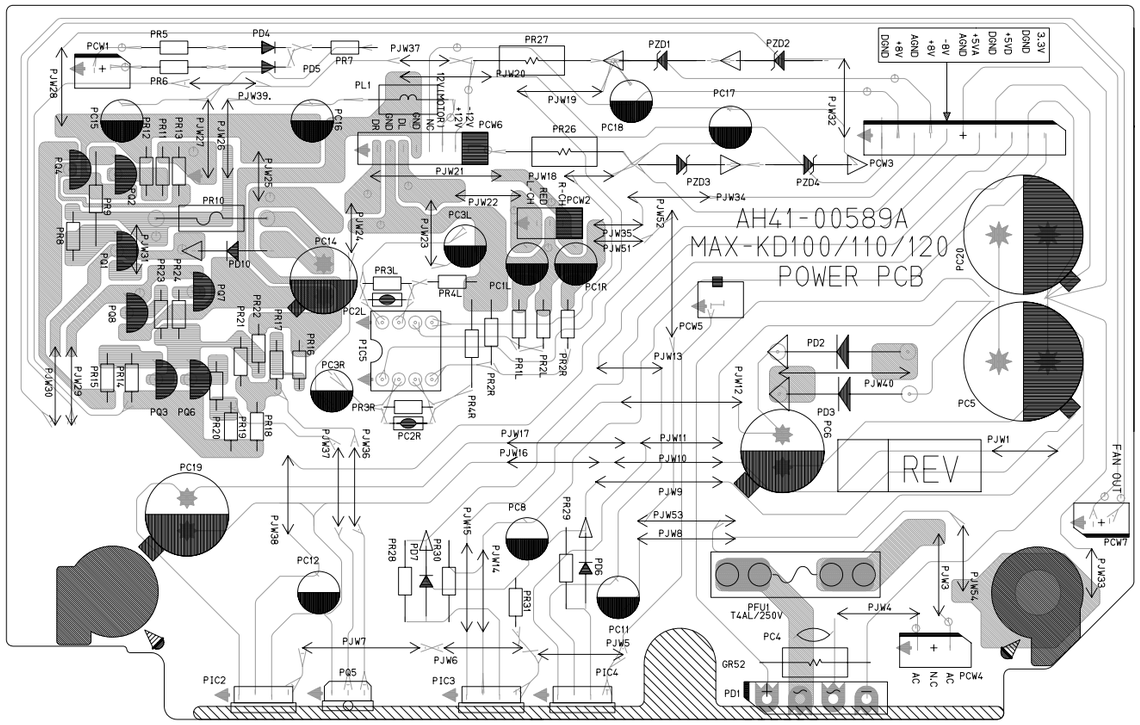

*** MAX-KD100/ KD110**

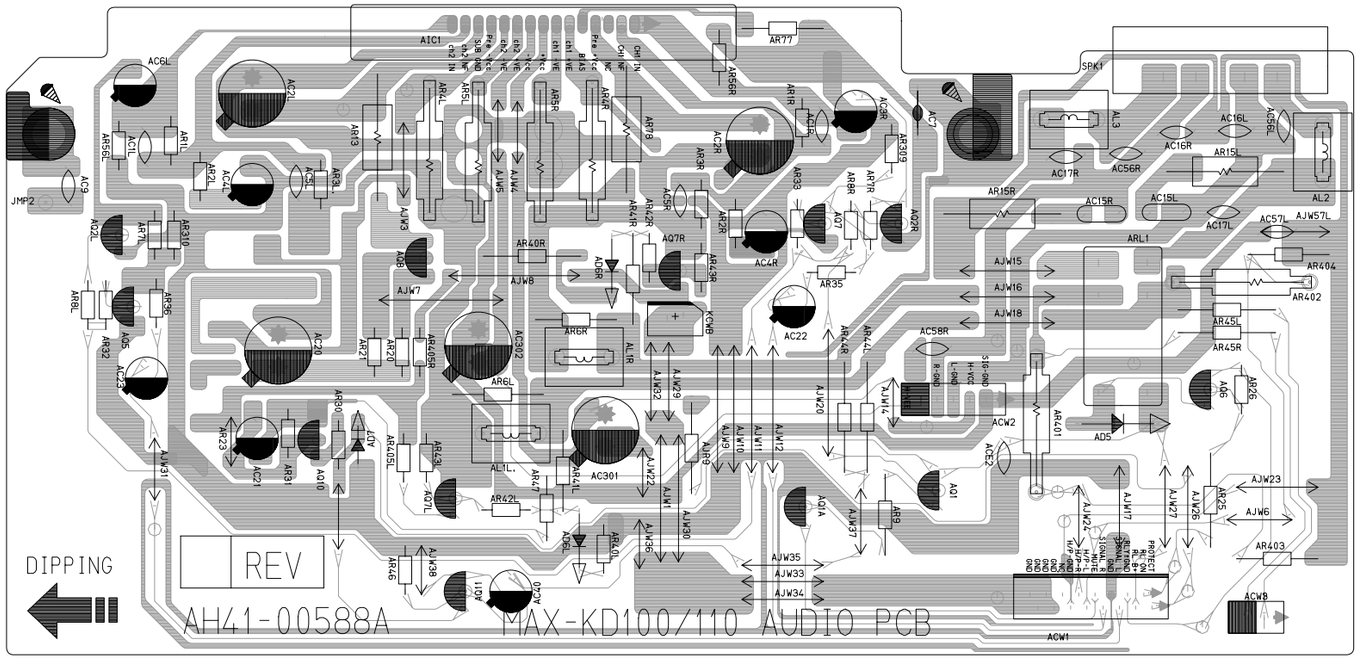

*** MAX-KD120**

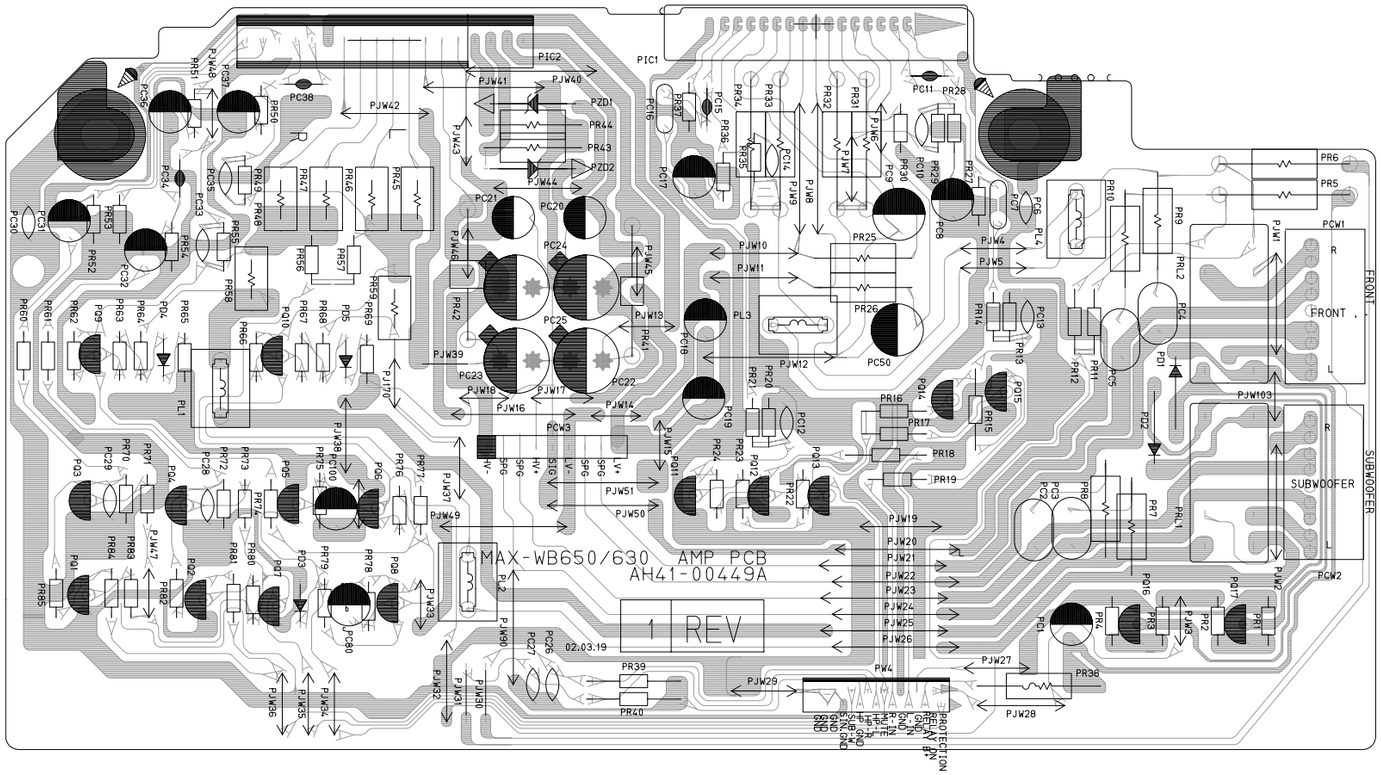

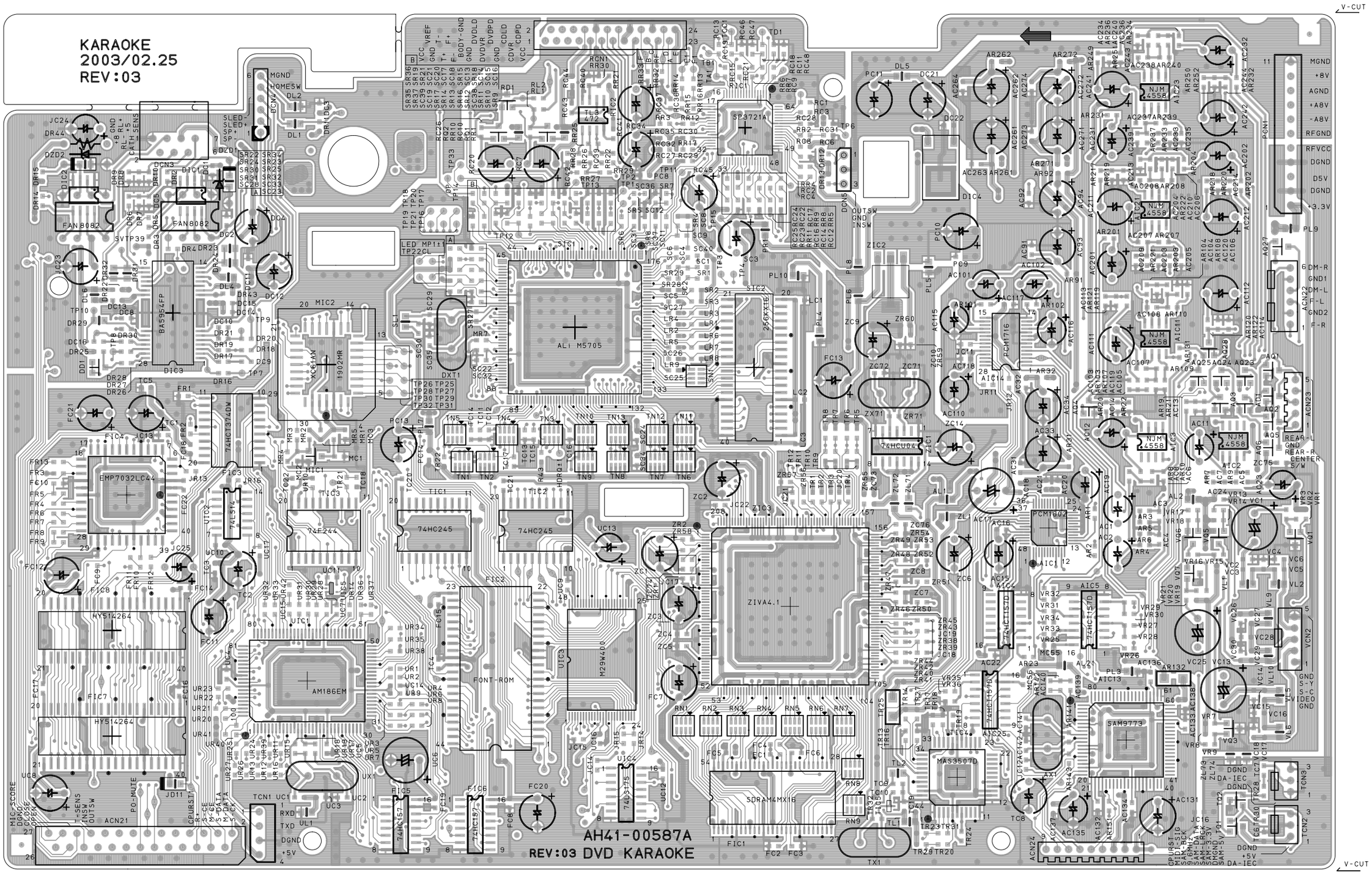
KARAOKE
2003/02.25
REV:03
AH41-00587A
REV:03 DVD KARAOKE
ALi M5705
ZIVA4.1
SAM9773
EMP7032LC44
AM186EM
FONT-ROM
SDRAM4MX16
MAS3507D
PCM1602
NJM 4558
V-CUT

6. Wiring Diagram

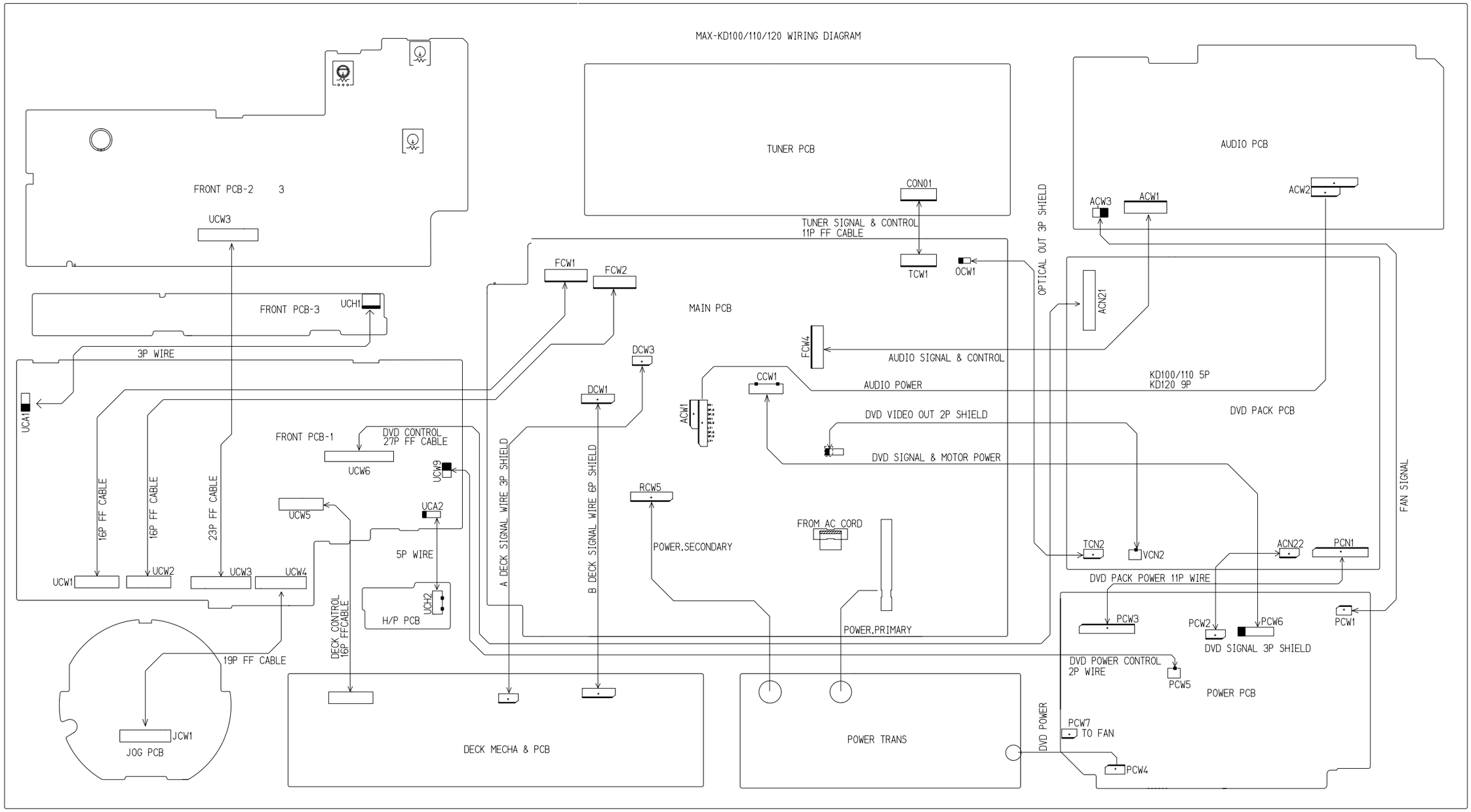

7-1 MAIN

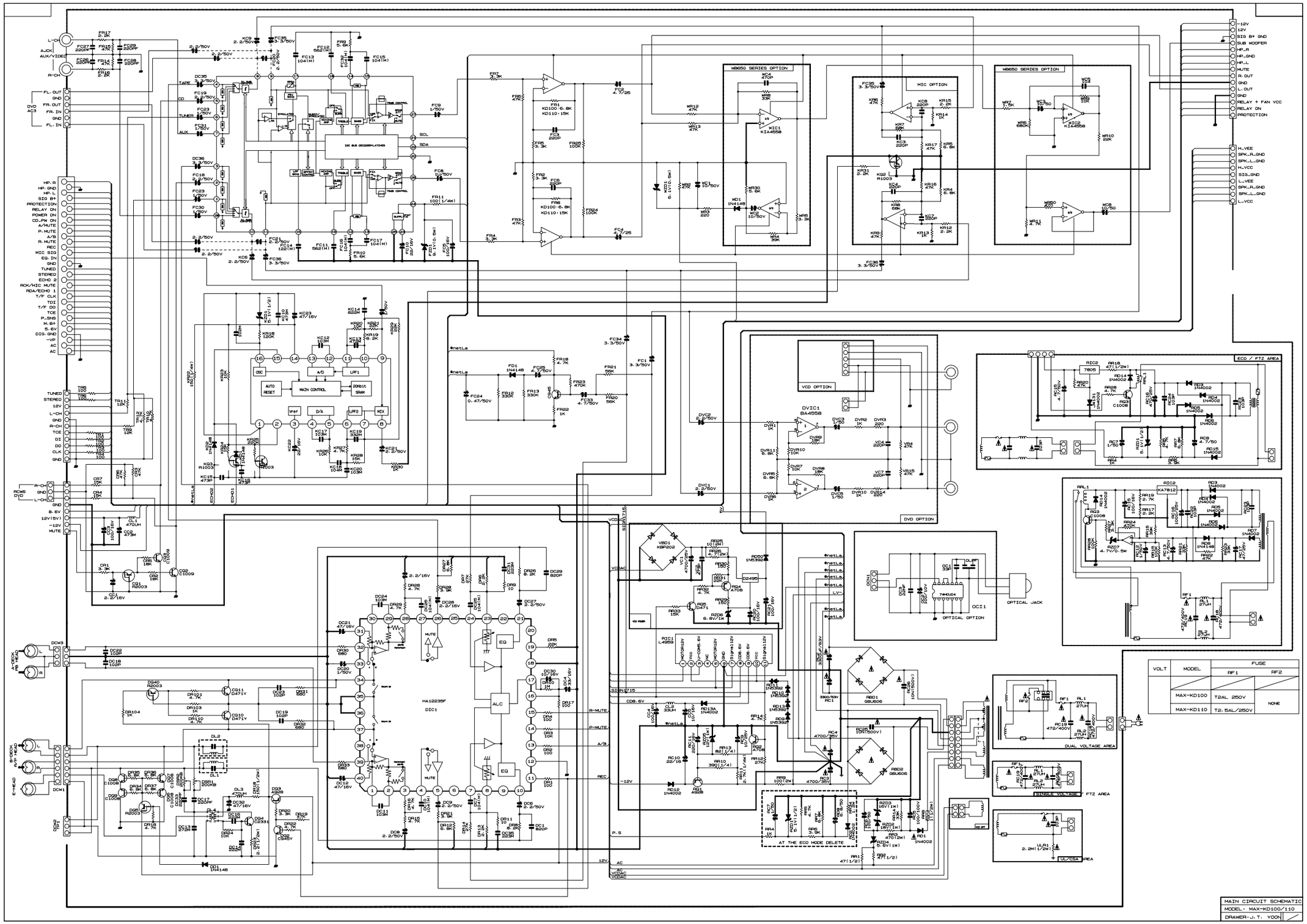
MAIN CIRCUIT SCHEMATIC
MODEL: MAX-KD100/110
DRAWER: J.T. YOON
VOLT
MODEL
FUSE
RF1
RF2
MAX-KD100
T2AL 250V
NONE
MAX-KD110
T2.5AL/250V
DUAL VOLTAGE AREA
SINGLE VOLTAGE FTZ AREA
UL/CSA AREA
ECO / FTZ AREA
MIC OPTION
DVD OPTION
VCD OPTION
OPTICAL OPTION
OPTICAL JACK
AT THE ECO MODE DELETE
WM650 SERIES OPTION
HA12235F
DIC1
MAIN CONTROL
A/D
D/A
LPF1
LPF2
MIX
SRAM
AUTO RESET
OSC
EQ
ALC
MUTE
VCC
VCDAC
12V
AC
P.S

- This Document can not be used without Samsung's authorization -

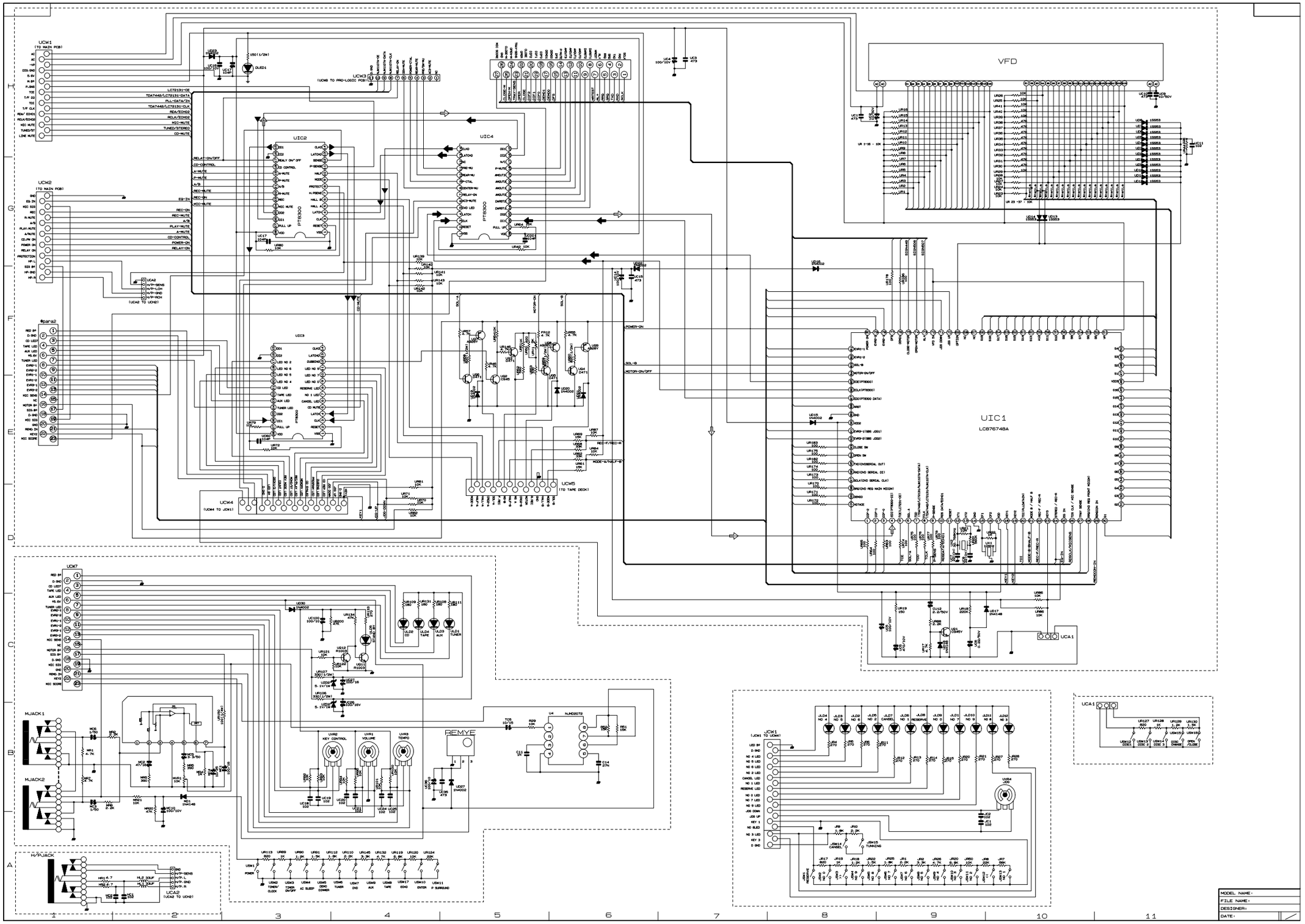

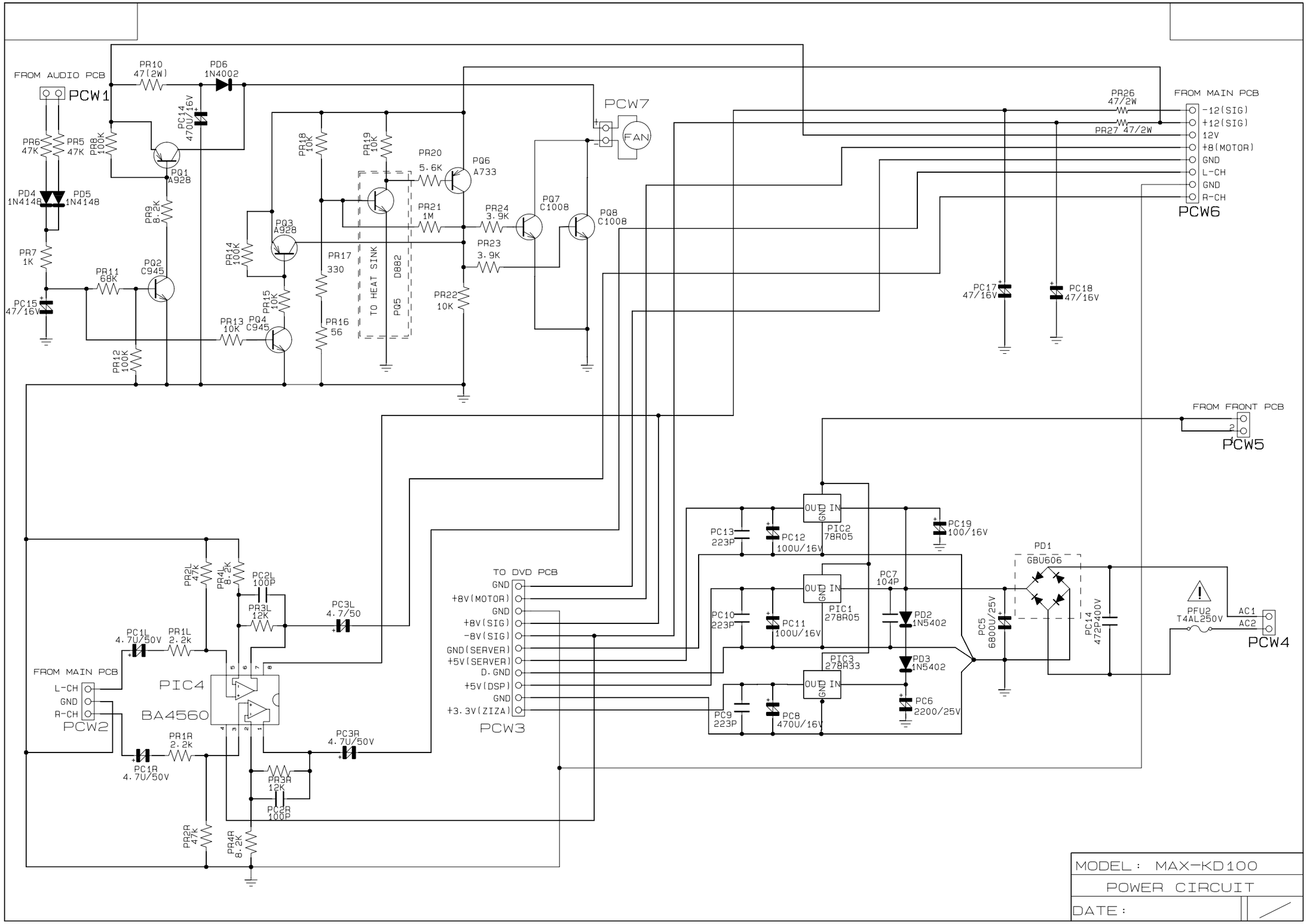
FROM AUDIO PCB
PCW1
PR10 47(2W)
PD6 1N4002
PC14 470U/16V
PR6 47K
PR5 47K
PR8 100K
PQ1 A928
PD4 1N4148
PD5 1N4148
PR9 8.2K
PR7 1K
PR11 68K
PQ2 C945
PC15 47/16V
PR12 100K
PR18 10K
PR19 10K
PR20 5.6K
PQ6 A733
PR21 1M
PR24 3.9K
PQ7 C1008
PQ8 C1008
PR23 3.9K
PR22 10K
PQ3 A928
PR14 100K
PR17 330
PR15 10K
PR13 10K
PQ4 C945
PR16 56
TO HEAT SINK
D882
PQ5
PCW7
FAN
PR26 47/2W
PR27 47/2W
FROM MAIN PCB
-12(SIG)
+12(SIG)
12V
+8(MOTOR)
GND
L-CH
GND
R-CH
PCW6
PC17 47/16V
PC18 47/16V
FROM FRONT PCB
PCW5
PR2L 47K
PR4L 8.2K
PC2L 100P
PR3L 12K
PC3L 4.7/50
PC1L 4.7U/50V
PR1L 2.2K
FROM MAIN PCB
L-CH
GND
R-CH
PCW2
PIC4
BA4560
PR1R 2.2K
PC1R 4.7U/50V
PC3R 4.7U/50V
PR3R 12K
PC2R 100P
PR2R 47K
PR4R 8.2K
TO DVD PCB
GND
+8V(MOTOR)
GND
+8V(SIG)
-8V(SIG)
GND(SERVER)
+5V(SERVER)
D.GND
+5V(DSP)
GND
+3.3V(ZIZA)
PCW3
PC13 223P
PC12 100U/16V
PIC2 78R05
PC19 100/16V
PC10 223P
PC11 100U/16V
PIC1 278R05
PC7 104P
PD2 1N5402
PIC3 278R33
PD3 1N5402
PC9 223P
PC8 470U/16V
PC6 2200/25V
PC5 6800U/25V
PD1 GBU606
PC14 472P400V
PFU2 T4AL250V
AC1
AC2
PCW4
MODEL : MAX-KD100
POWER CIRCUIT
DATE :

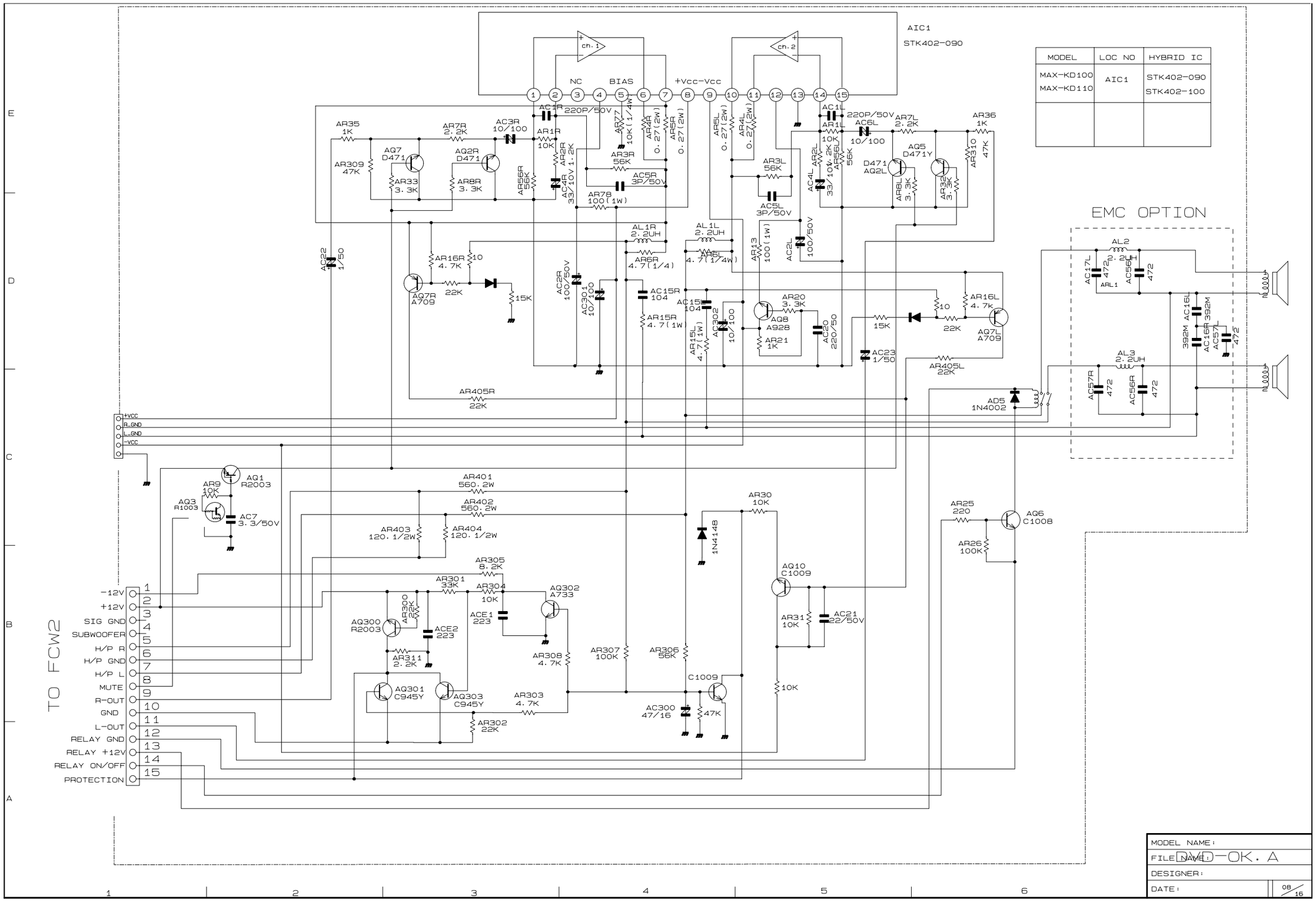

MODEL	LOC NO	HYBRID IC
MAX-KD100 MAX-KD110	AIC1	STK402-090 STK402-100

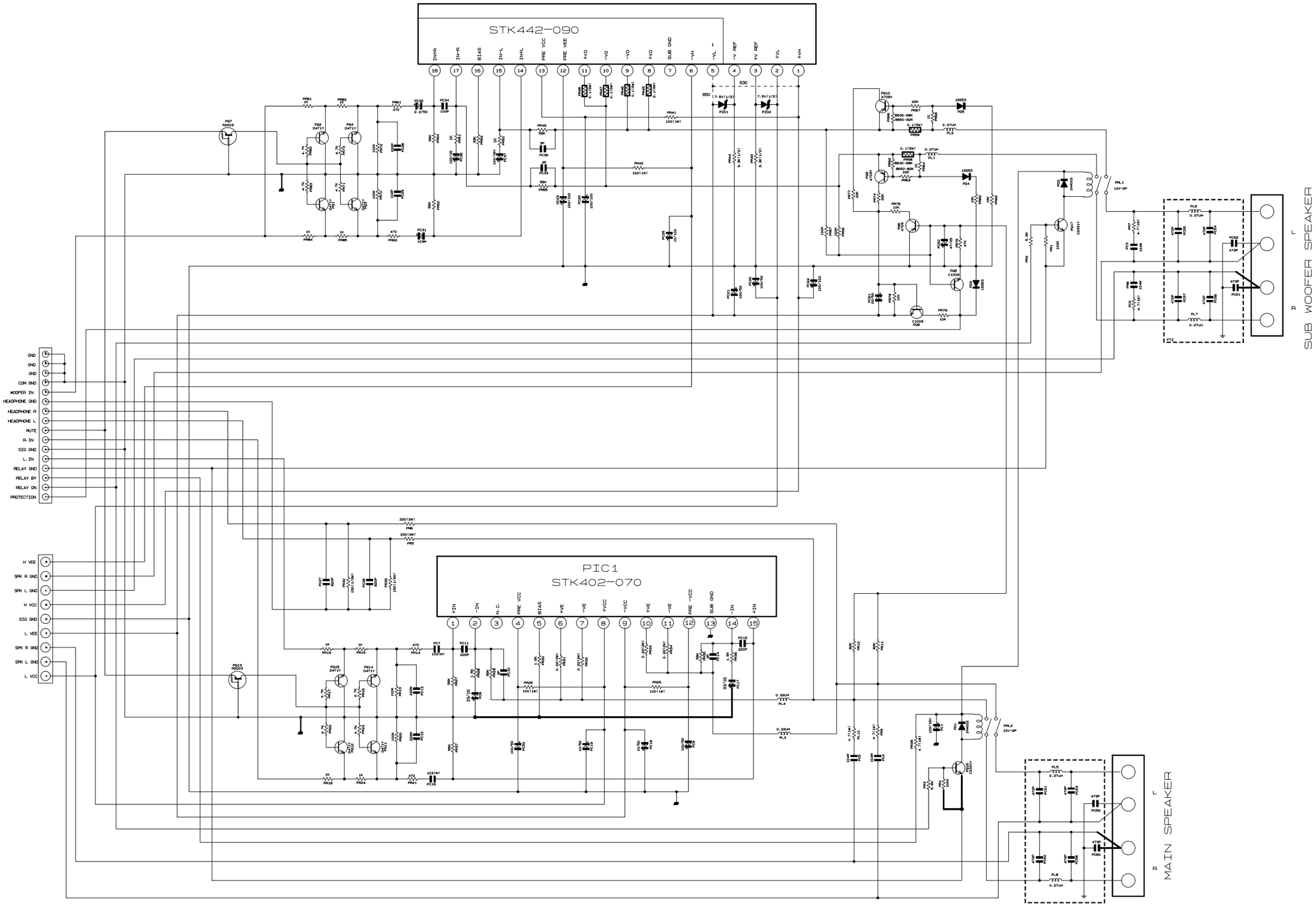
STK442-090
PIC1
STK402-070
SUB WOOFER SPEAKER
MAIN SPEAKER
GND
COM GND
WOOFER IN
HEADPHONE GND
HEADPHONE R
HEADPHONE L
MUTE
R. IN
SIG GND
L. IN
RELAY GND
RELAY B+
RELAY ON
PROTECTION
H VEE
SPK R GND
SPK L GND
H VCC
SIG GND
L VEE
SPK R GND
SPK L GND
L VCC

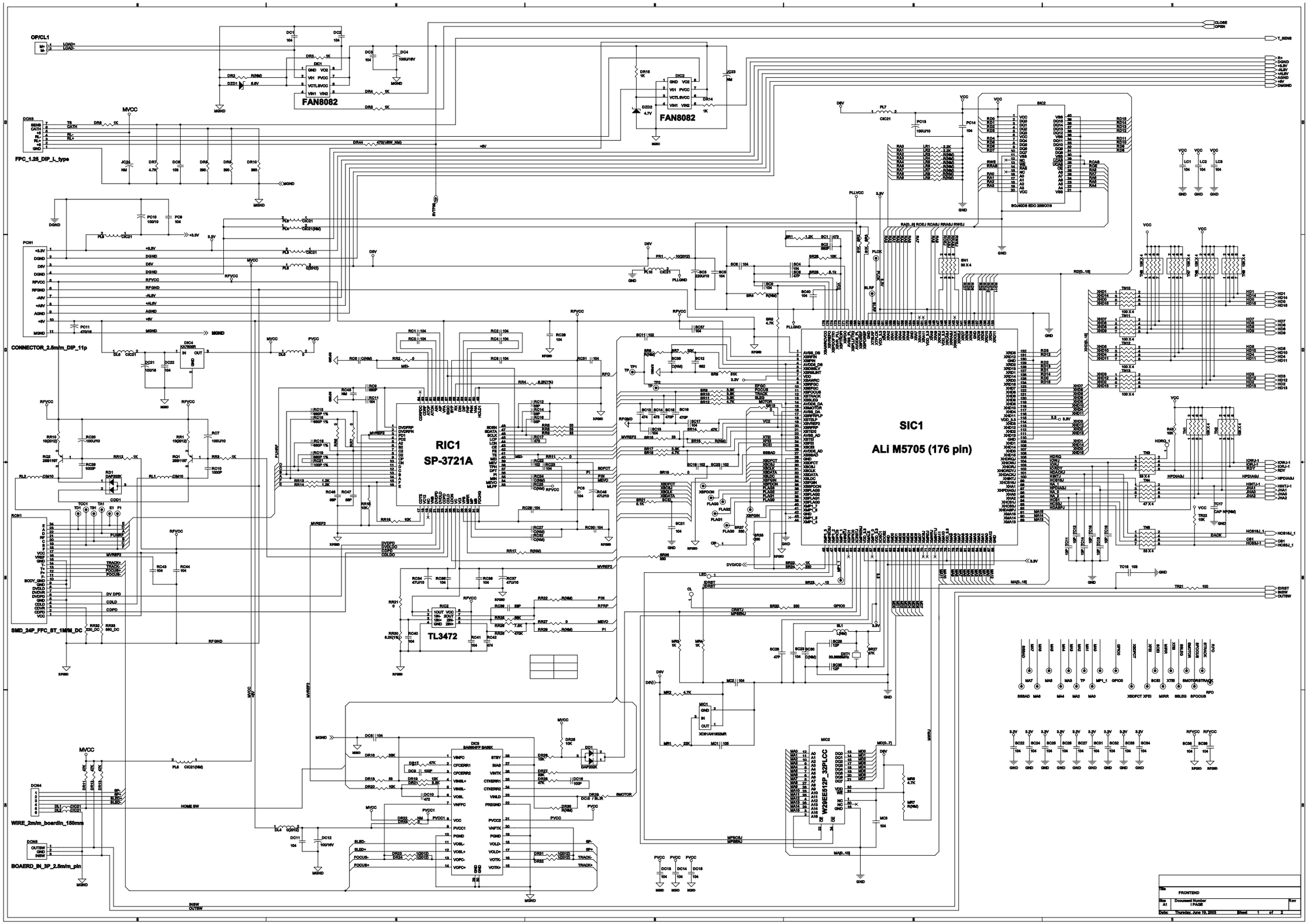
FAN8082
FAN8082
RIC1
SP-3721A
SIC1
ALi M5705 (176 pin)
TL3472
FPC_1.25_DIP_L_type
CONNECTOR_2.5mm_DIP_11p
SMD_24P_FFC_ST_1M/M_DC
WIRE_2m/m_boardin_150mm
BOAERD_IN_3P_2.5m/m_pin
FRONTEND

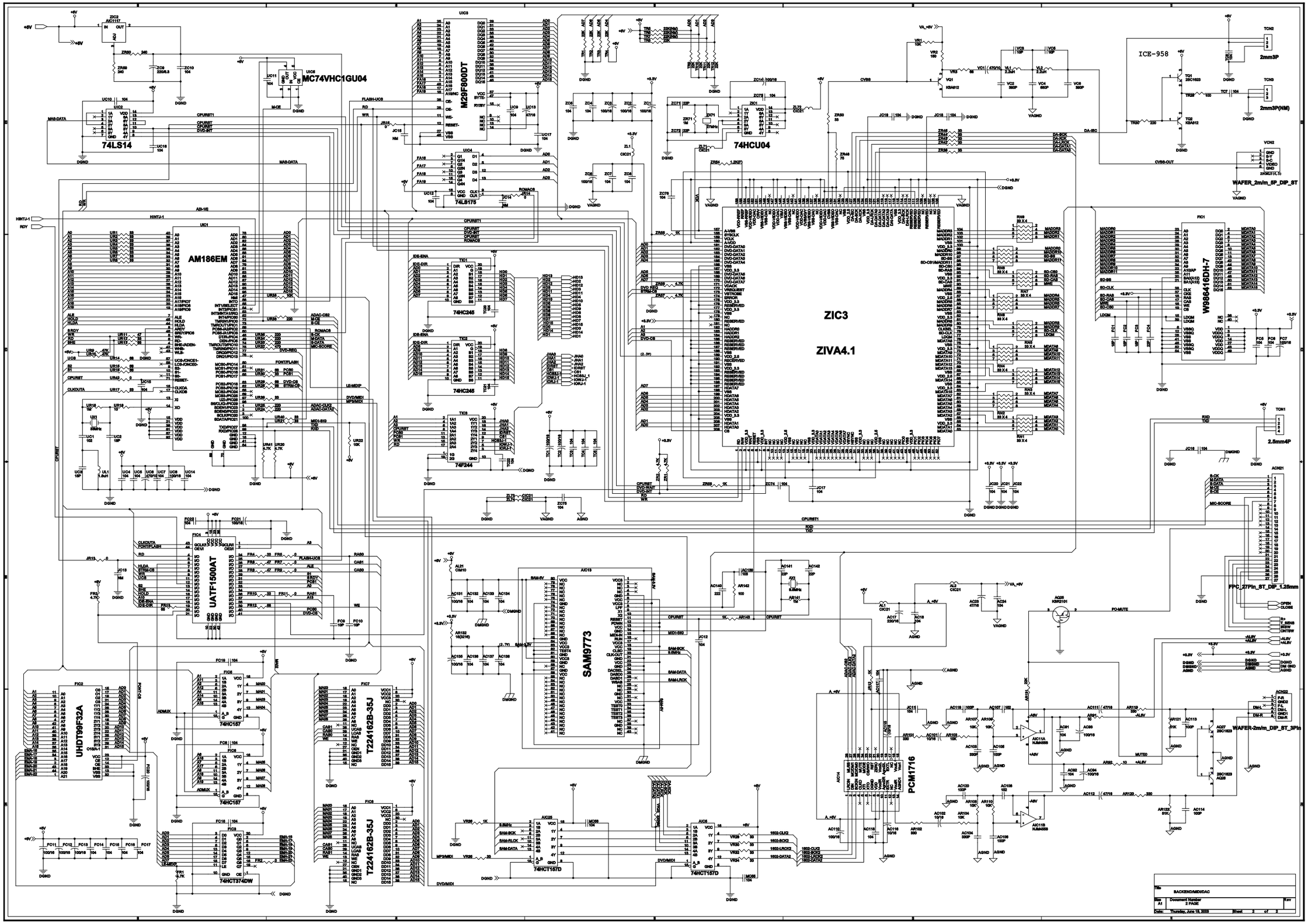
ZIC3
ZIVA4.1
AM186EM
M29F800DT
MC74VHC1GU04
74LS14
74HCU04
74LS175
74HC245
74F244
UATF1500AT
UHDT999F32A
SAM9773
T224162B-35J
74HC157
74HCT157D
74HCT374DW
PCM1716
W986416DH-7
ICE-958
2mm3P
2mm3P(NM)
WAFER_2m/m_5P_DIP_ST
2.5mm4P
FPC_27Pin_ST_DIP_1.25mm
WAFER-2m/m_DIP_ST_3Pin
BACKEND/MIDI/DAC
Document Number
2 PAGE
Thursday, June 19, 2003
Sheet 2 of 2

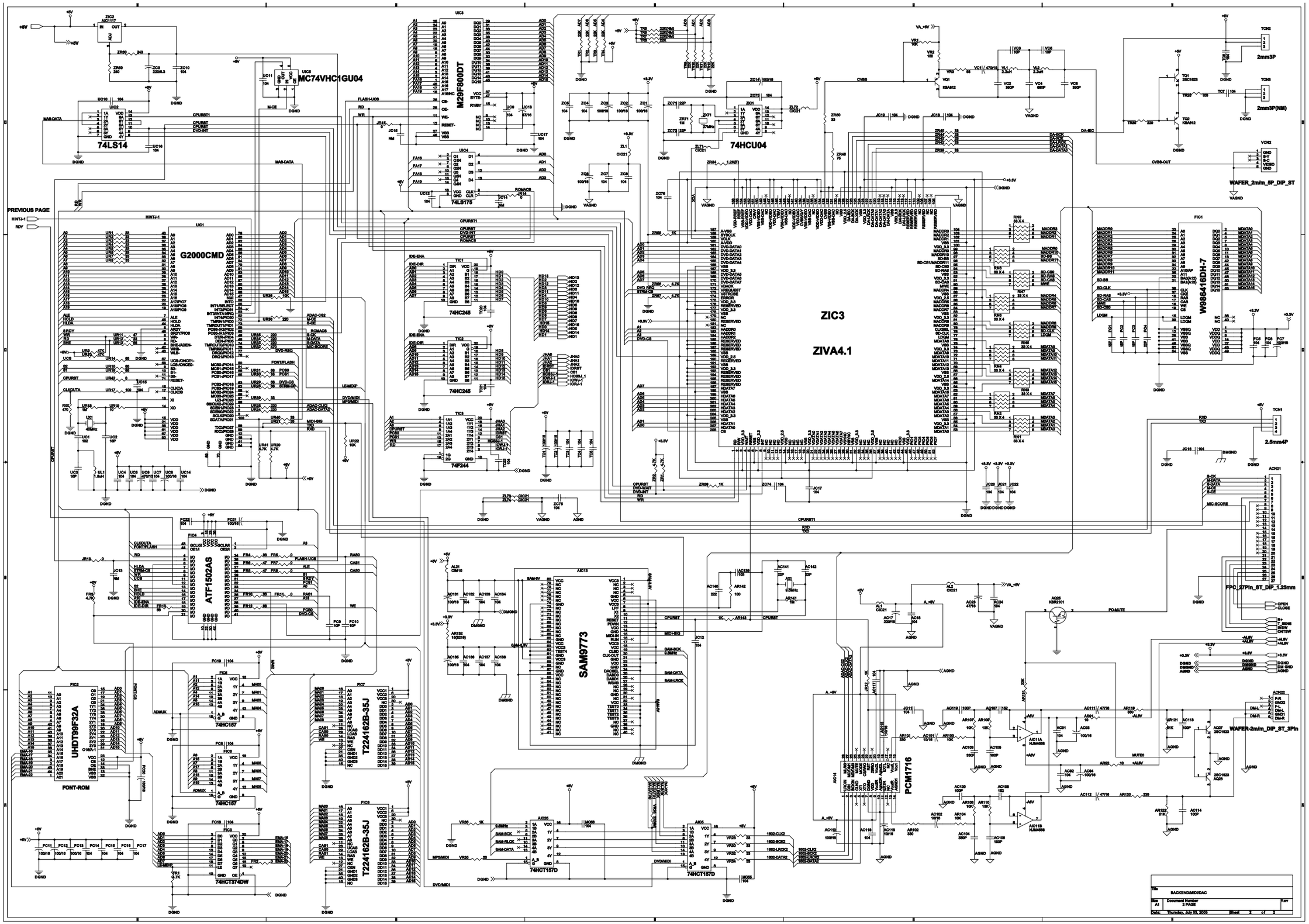
G2000CMD
ZIC3
ZIVA4.1
SAM9773
PCM1716
ATF1502AS
UHDT99F32A
FONT-ROM
M29F800DT
W986416DH-7
MC74VHC1GU04
74LS14
74HCU04
74LS175
74HC245
74F244
74HC157
74HCT157D
74HCT374DW
T224162B-35J
2mm3P
2mm3P(NM)
WAFER_2m/m_5P_DIP_ST
2.5mm4P
FPC_17Pin_ST_DIP_1.25mm
WAFER-2m/m_DIP_ST_3Pin
PREVIOUS PAGE
BACKEND/MIDI/DAC
Document Number
2 PAGE
Thursday, July 03, 2003

8. TroubleShooting

8-1 DVD Servo Part

1. Initial operation after power ON

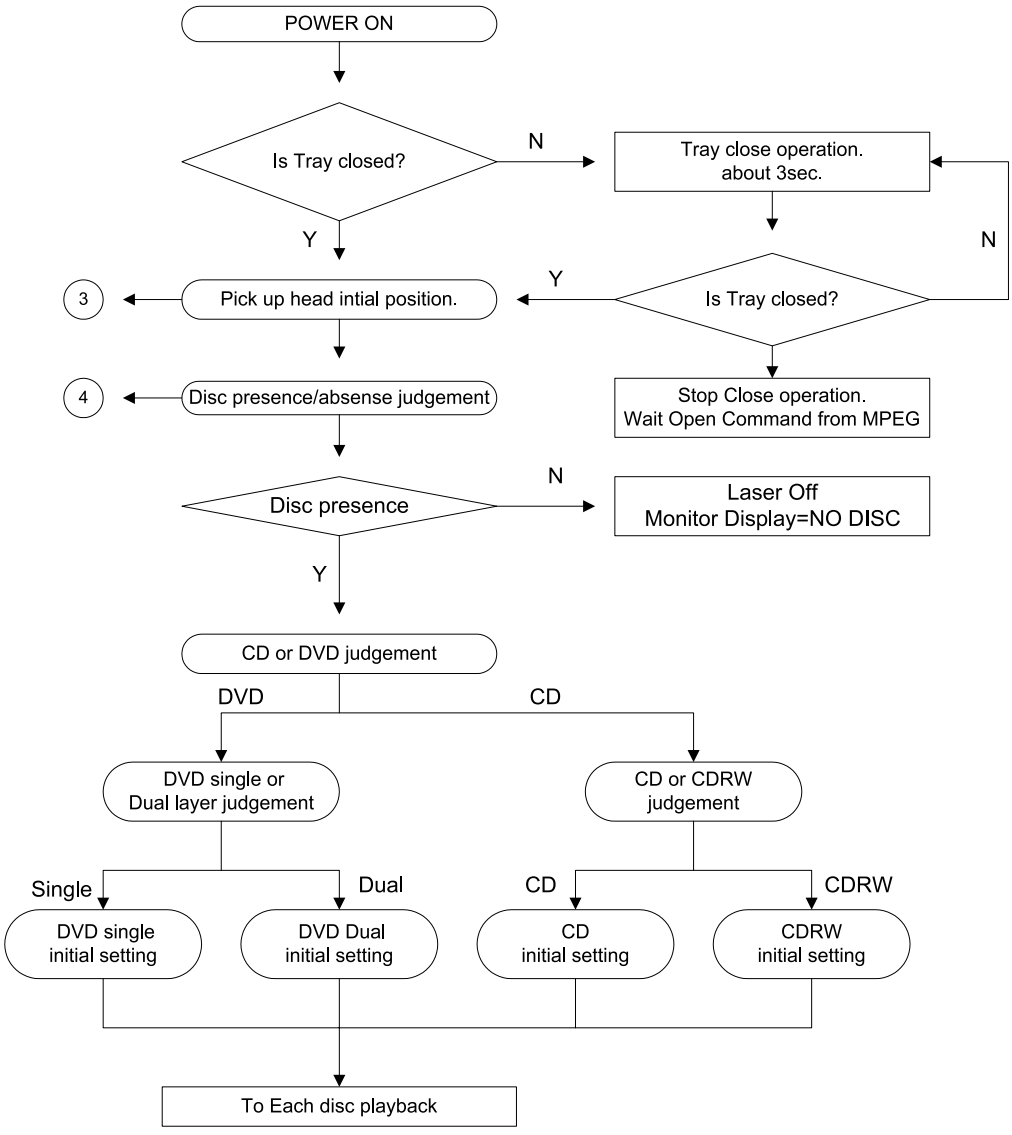

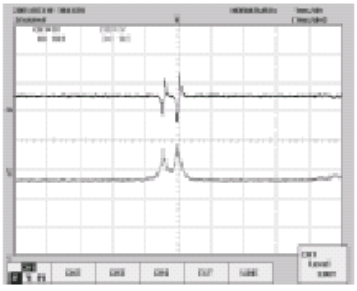

(DVD Dual)

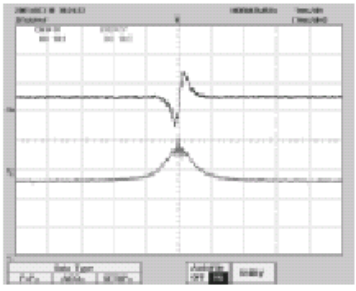

(DVD Single)

2. Play operation

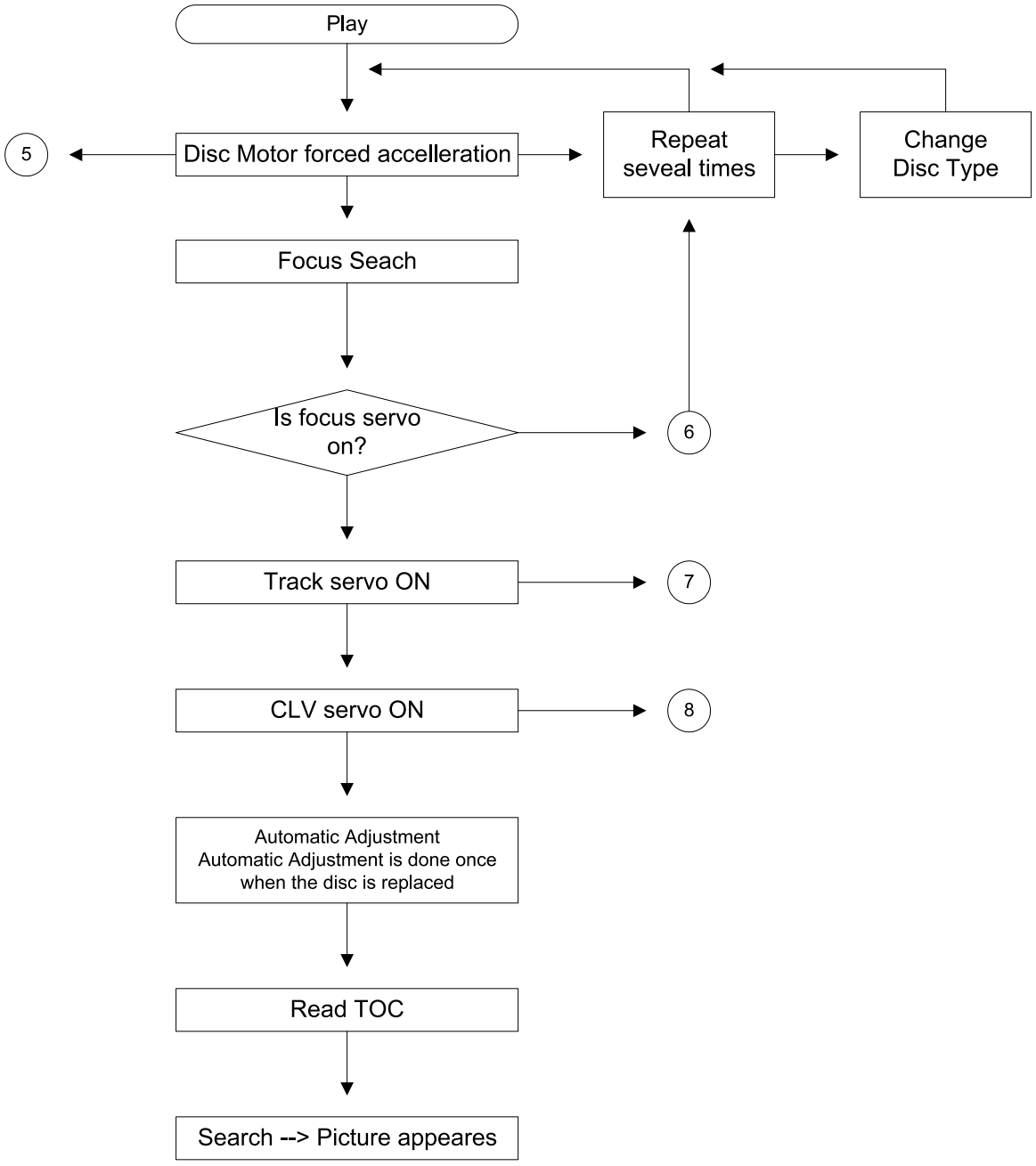

3. PickUp Head Initial Postion

PickUp Head Initial Postion

1. Move Pick Up Head to inner diretion until pin5 of DCN4="L"
2. If pin5 of DCN4="L", then move Pick Up Head to outer diretion for a short time.
3. Ture On the Laser of Pick Up Head to judge that disc is presence or not.

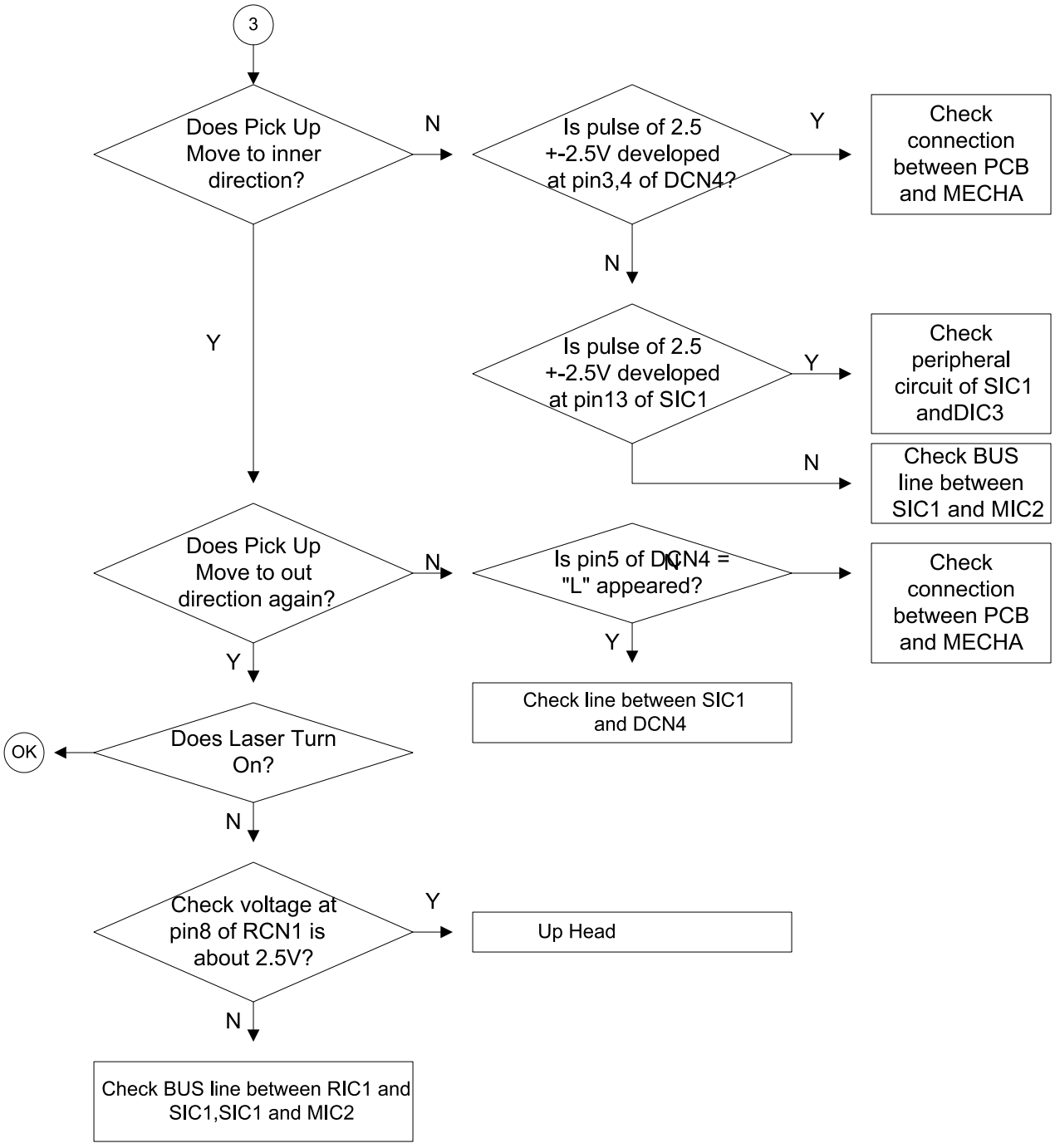

4. Disc Presence/Absense Judgment

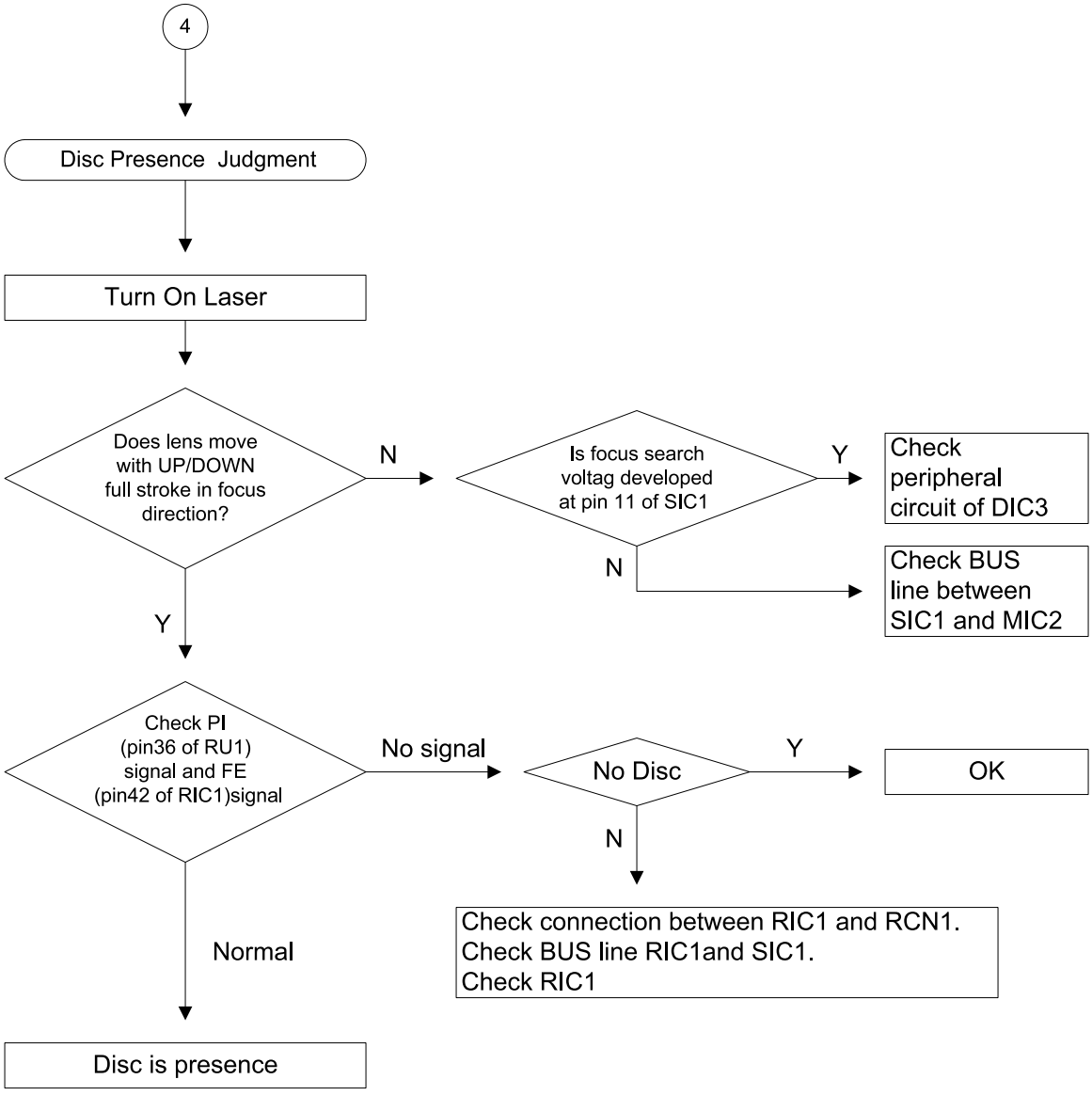

5. Disc Motor Does Not Rotate

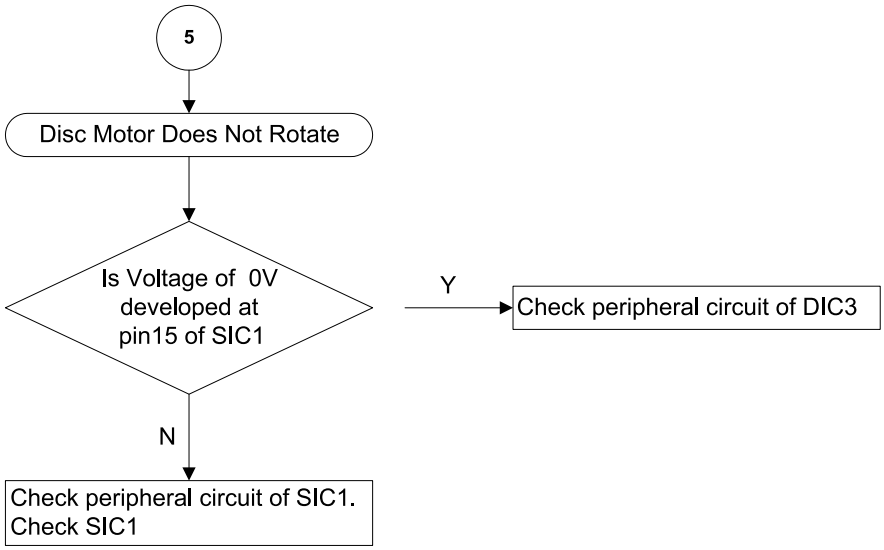

6. Focus Servo does not Work

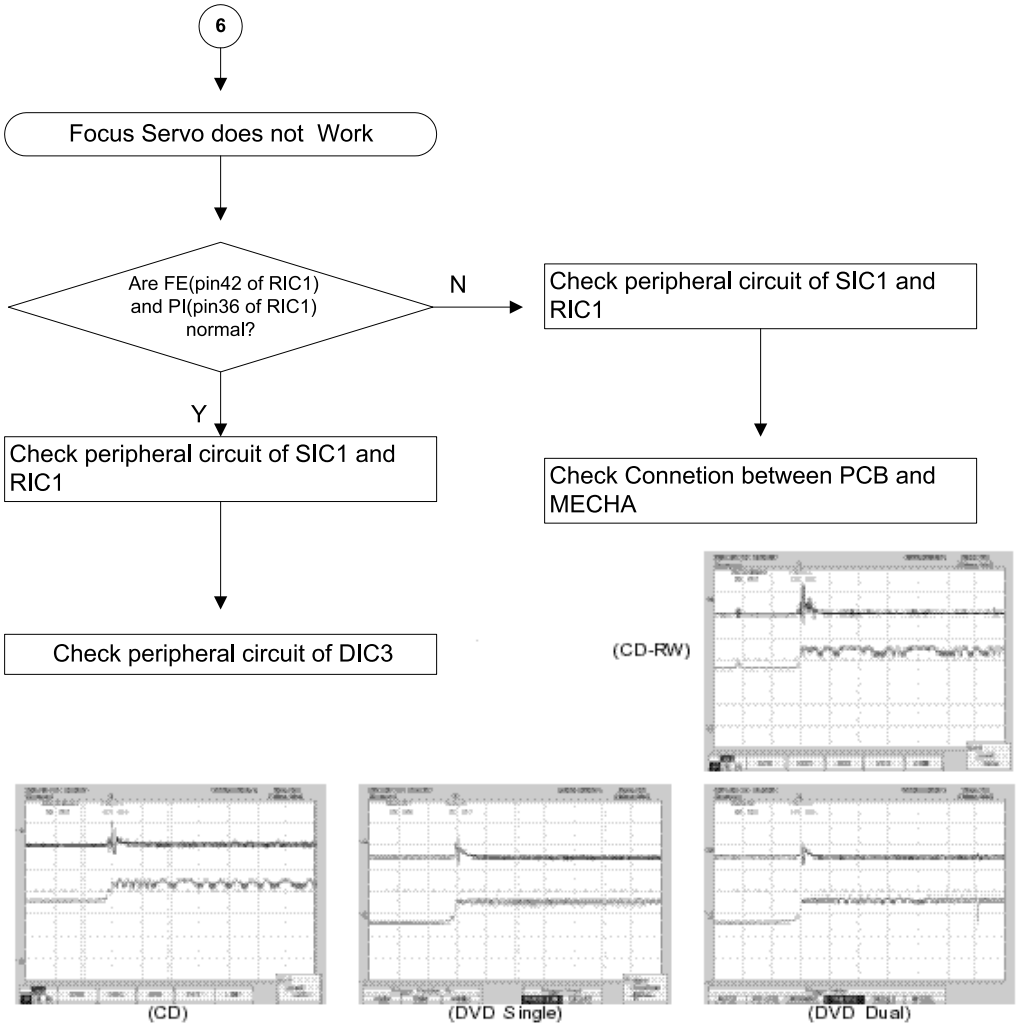

7. Tracking Servo Does Not Work

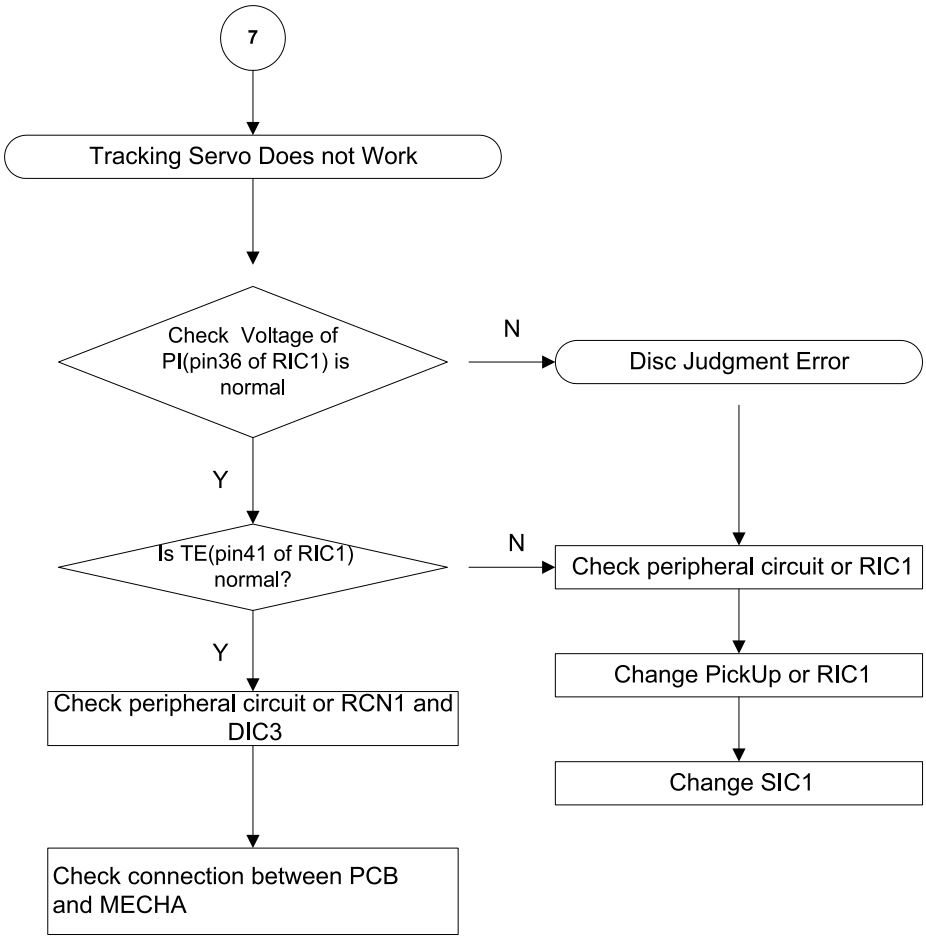

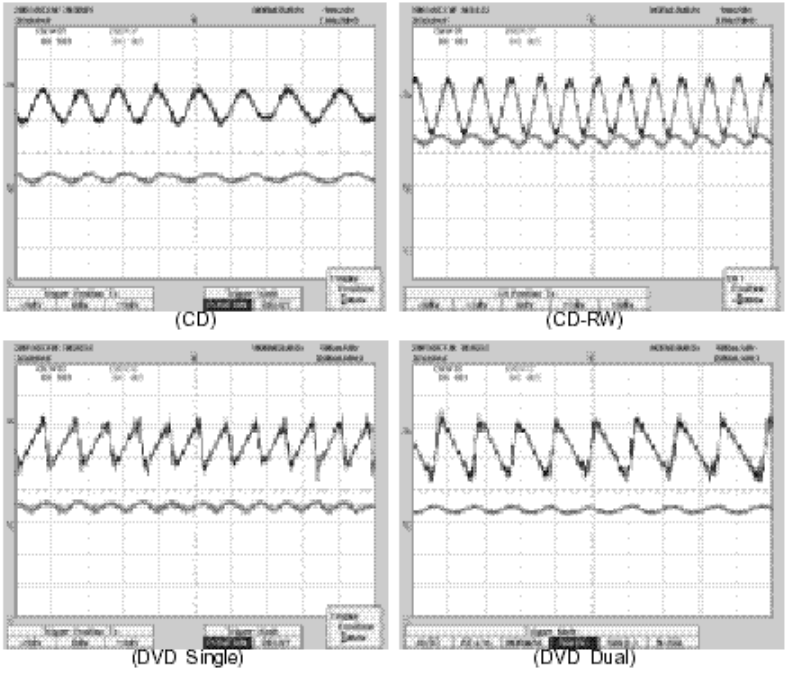

8. CLV Servo Does Not Work

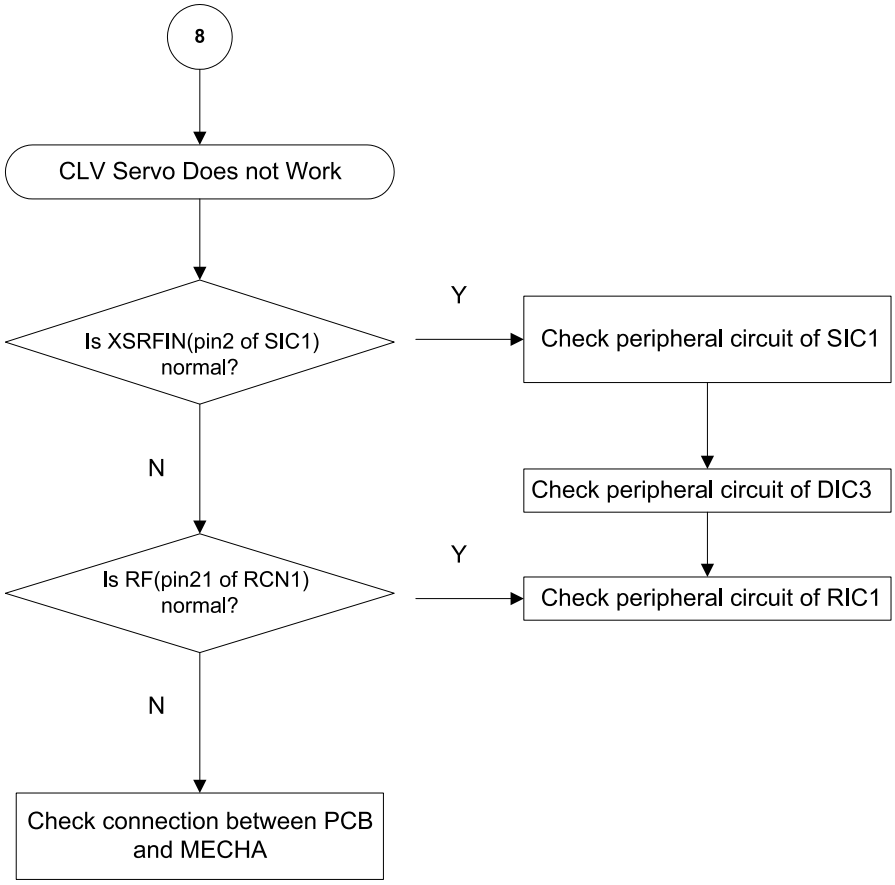

1. Initial operation after ON

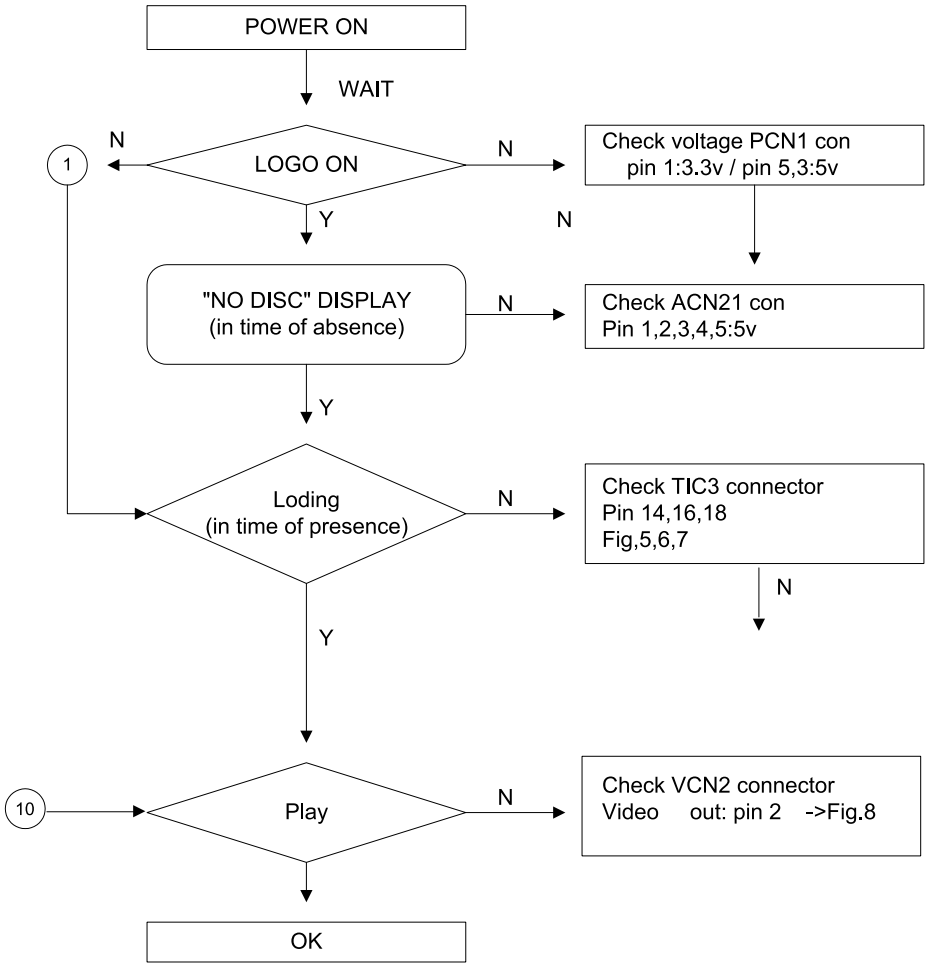

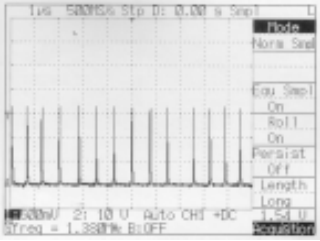
Fig.5

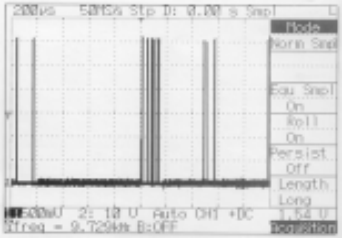
Fig.6

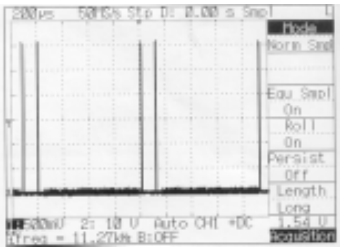
Fig.7

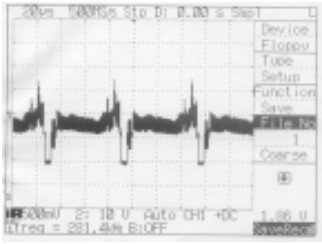
Fig.8

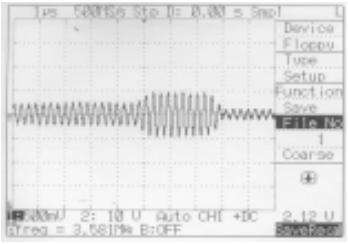
Fig.9

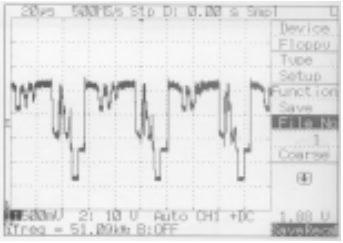
Fig.10

2. LOGO operation

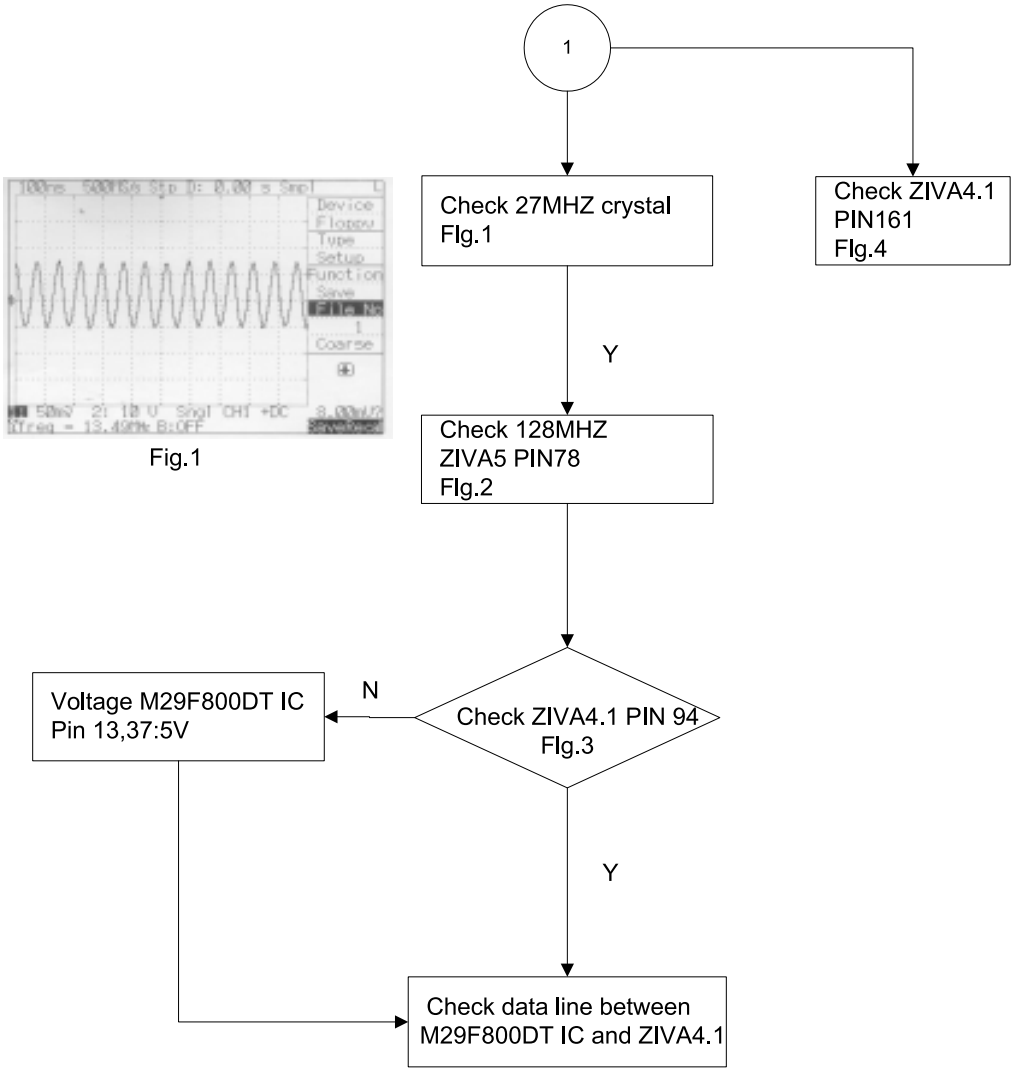

Fig.1

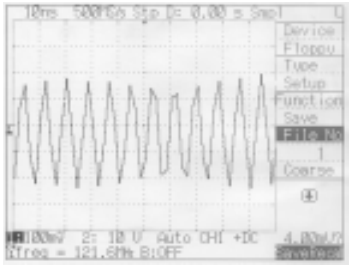

Fig.2

Fig.3

Fig.4

3. Karaoke Midi Does Not Work

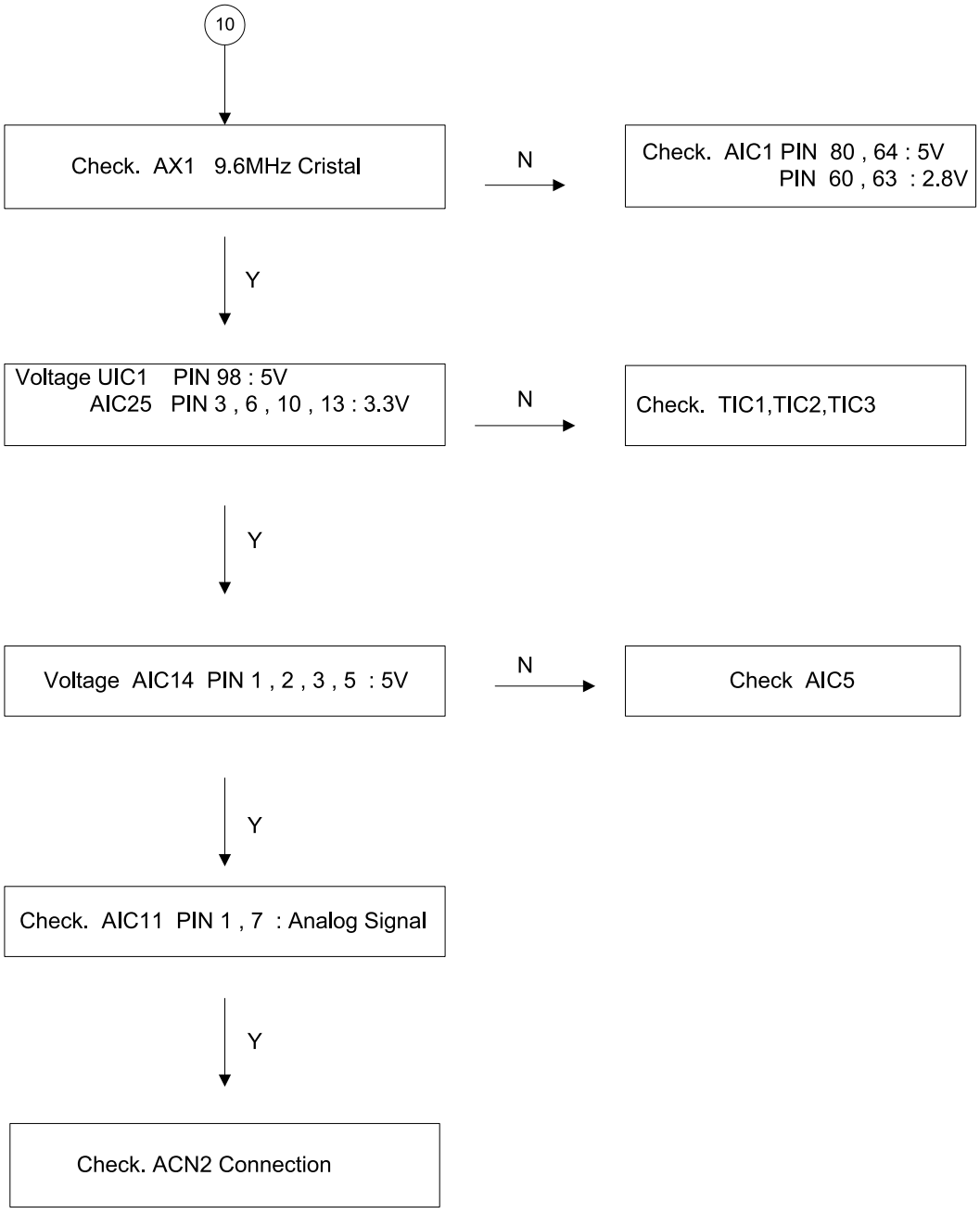

SAMSUNG

ELECTRONICS

This Service Manual is a property of Samsung Electronics Co.,Ltd.
Any unauthorized use of Manual can be punished under applicable international and/or domestic law.

© Samsung Electronics Co.,Ltd. MAR. 2003
Printed in Korea
Code no. AH68-01322A