Mini System FW363/21M/22/34

Service
Service
Service

Service Manual

TABLE OF CONTENTS

Published by Consumer Electronics Printed in The Netherlands

© Copyright reserved Subject to modification

4822 725 25705

PCS 96 629A

PHILIPS

LOCATION OF PRINTED CIRCUIT BOARDS

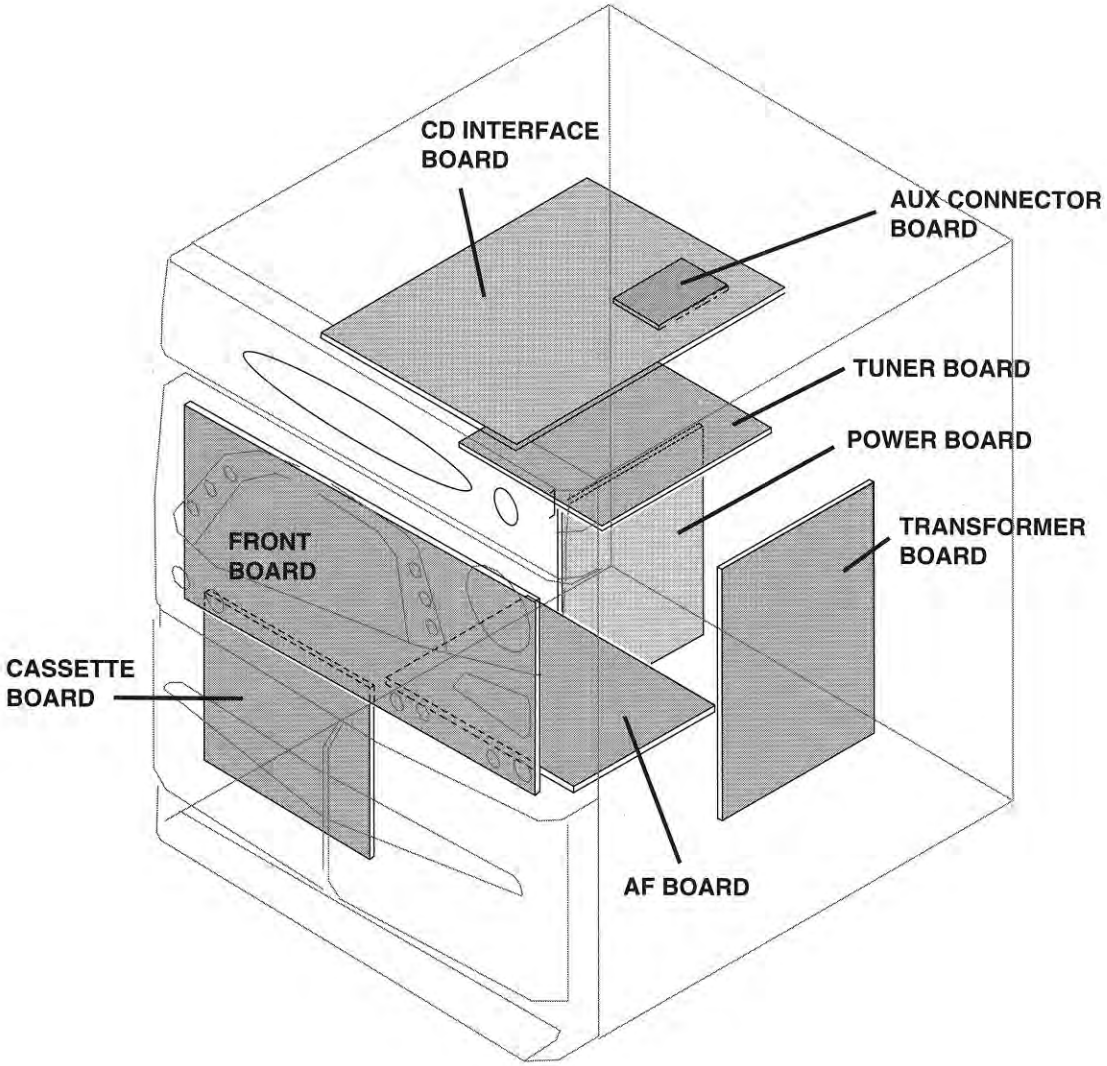

TECHNICAL SPECIFICATION

General:

Mains voltage	: 120V - 230V -/21
	230V -/22
	230V -/34
Mains frequency	: 50 - 60Hz
Power consumption	: 37W max. @1/8 Prated

Amplifier:

Output power	: 2 x 18W at 3Ω
Headphone	: 3.5mm stereo jack
Frequency response	: 40Hz - 20kHz (-3dB) Limit
Dynamic bass boost	: 11.5dB ±2dB at 60Hz
Input sensitivity	
Aux/Line	: 400mV ±2dB
Microphone	: 2.5mV ±2dB @ 1kHz

Equalizer:

80Hz	: -4 ~ 6.5dB
1 KHz	: ± 3.5dB
10kHz	: -1.8 ~ 5dB

Tuner:

FM

Tuning range	: 87.5MHz-108MHz
Grid	: 100kHz
IF	: 10.7MHz
Sensitivity Mono 26dB S/N	: < 7μV
Distortion at RF=1mV, _f=75kHz	: 3% {1%}
IF rejection	: > 60dB
Image rejection	: > 25dB
-3dB Limiting Point	: <23.5dBf {22dBf}

MW

Tuning range	: 530kHz - 1700kHz
	{531 - 1602kHz}
	531kHz - 1062kHz
Grid	: 10kHz
IF	: 450kHz ± 1kHz
Sensitivity at 26dB S/N	: < 4.0mV/M
Distortion at RF=50mV, m=80%)	: < 5% {3%}
IF rejection	: > 45dB
Image rejection	: > 28dB

LW

Tuning range	: 153kHz-279kHz
Sensitivity at 26dB S/N	: < 6.0mV/M
IF rejection	: > 26dB
Image rejection	: > 28dB {35dB}

CD Unit:

Frequency response within	: 20Hz - 20kHz at ±3dB
Signal/Noise ratio	: > 86dB (A-weighted)
Channel unbalance	: < 1dB
Channel separation at 1kHz	: > 45dB
De-emphasis	: 0 or 15/50 μS

Recorder Part:

Tape speed	: 4.76 cm/sec ±2%
Wow and flutter	: < 0.2%
Fast-wind time C60	: 130 sec
Bias system AM/FM	: AC 75kHz ± 5kHz
Distortion at 200nWb/m	: < 5%
Channel difference at PB	: < 3dB
Channel difference overall	: < 3dB
Channel Separation	: > 24dB at 1kHz
Track Separation	: > 55dB at 1kHz
ALC attack time	: < 10ms
ALC recovery time	: > 60s
Frequency Response	: 80Hz - 12.5kHz within - 8dB
Signal to noise ratio ①	: > 43dB
Signal to Hiss ratio ②	: > 48dB
Erase attenuation ③	: > 55dB at 1kHz

① at 250 nW/m FF-weighted (22Hz-22kHz band pass filter)
② at 250 nW/m A-weighted
③ use a 1kHz passfilter to minimize the wide band noise component

Note: {....} for version 22 only

MEASUREMENT SETUP

Tuner FM

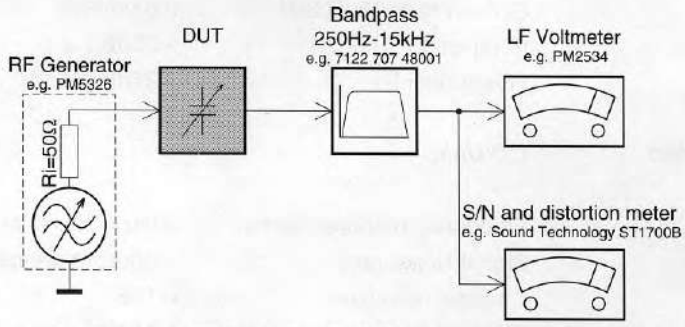

Use a bandpass filter to eliminate hum (50Hz, 100Hz) and disturbance from the pilottone (19kHz, 38kHz).

Tuner AM (MW,LW)

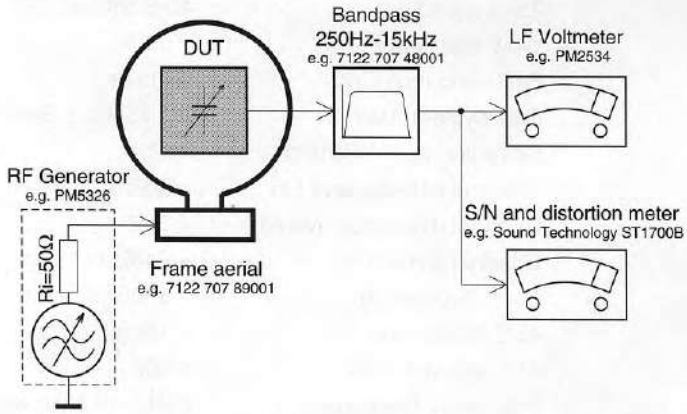

To avoid atmospheric interference all AM-measurements have to be carried out in a Faraday´s cage.
Use a bandpass filter (or at least a high pass filter with 250Hz) to eliminate hum (50Hz, 100Hz).

CD

Use Audio Signal Disc SBC429 4822 397 30184
(replaces test disc 3)

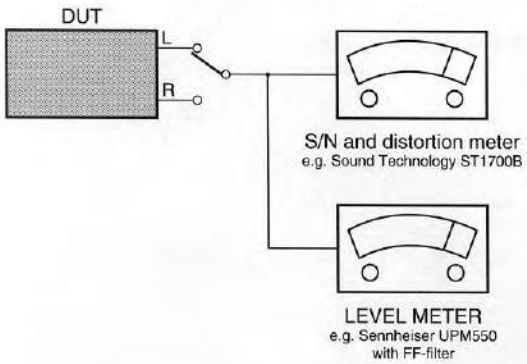

Recorder

Use Universal Test Cassette **CrO2** SBC419 4822 397 30069
or Universal Test Cassette **Fe** SBC420 4822 397 30071

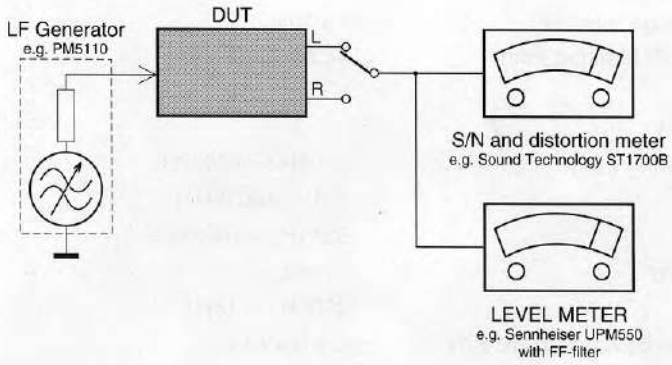

SERVICE AIDS

Service Tools:

Universal Torx driver holder 4822 395 91019
Torx bit T10 150mm 4822 395 50456
Torx driver set T6 - T20 ..... 4822 395 50145
Torx driver T10 extended 4822 395 50423

Cassette:

SBC419 Test cassette CrO2 ..... 4822 397 30069
SBC420 Test cassette Fe 4822 397 30071
MTT150 Dolby level 200nWb/M 4822 397 30271

Compact Disc:

SBC426/426A Test disc 5 + 5A 4822 397 30096
SBC442 Audio Burn-in Test disc 1kHz 4822 397 30155
SBC429 Audio Signals disc 4822 397 30184
Dolby Pro-logic Test Disc 4822 395 10216

ESD Equipment:

Anti-static table mat - large 1200x650x1.25mm ... 4822 466 10953
Anti-static table mat - small 600x650x1.25mm 4822 466 10958
Anti-static wristband 4822 395 10223
Connector box (1MΩ) 4822 320 11307
Extension cable
(to connect wristband to conn. box) 4822 320 11305
Connecting cable
(to connect table mat to conn. box) 4822 320 11306
Earth cable (to connect product to mat or box) 4822 320 11308
Complete kit ESD3
(combining all above products) 4822 320 10671
Wristband tester 4822 344 13999

HANDLING CHIP COMPONENTS

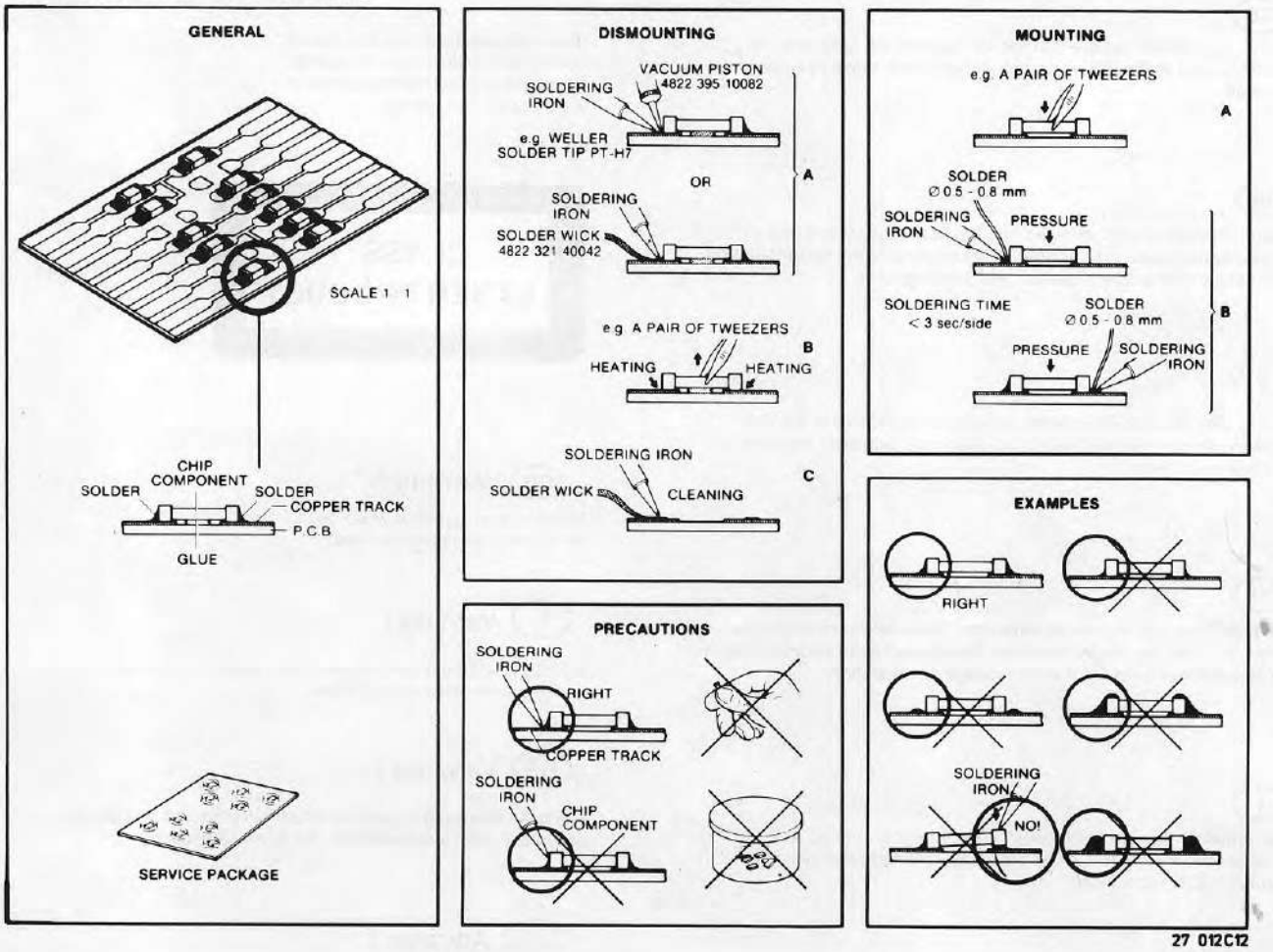

27 012C12

ESD

(GB) WARNING

All ICs and many other semi-conductors are susceptible to electrostatic discharges (ESD). Careless handling during repair can reduce life drastically.
When repairing, make sure that you are connected with the same potential as the mass of the set via a wrist wrap with resistance.
Keep components and tools also at this potential.

(F) ATTENTION

Tous les IC et beaucoup d'autres semi-conducteurs sont sensibles aux décharges statiques (ESD).
Leur longévité pourrait être considérablement écourtée par le fait qu'aucune précaution n'est prise à leur manipulation.
Lors de réparations, s'assurer de bien être relié au même potentiel que la masse de l'appareil et enfiler le bracelet serti d'une résistance de sécurité.
Veiller à ce que les composants ainsi que les outils que l'on utilise soient également à ce potentiel.

(D) WARNUNG

Alle ICs und viele andere Halbleiter sind empfindlich gegenüber elektrostatischen Entladungen (ESD).
Unsorgfältige Behandlung im Reparaturfall kan die Lebensdauer drastisch reduzieren.
Veranlassen Sie, dass Sie im Reparaturfall über ein Pulsarmband mit Widerstand verbunden sind mit dem gleichen Potential wie die Masse des Gerätes.
Bauteile und Hilfsmittel auch auf dieses gleiche Potential halten.

(NL) WAARSCHUWING

Alle IC's en vele andere halfgeleiders zijn gevoelig voor electrostatische ontladingen (ESD).
Onzorgvuldig behandelen tijdens reparatie kan de levensduur drastisch doen verminderen.
Zorg ervoor dat u tijdens reparatie via een polsband met weerstand verbonden bent met hetzelfde potentiaal als de massa van het apparaat.
Houd componenten en hulpmiddelen ook op ditzelfde potentiaal.

(I) AVVERTIMENTO

Tutti IC e parecchi semi-conduttori sono sensibili alle scariche statiche (ESD).
La loro longevità potrebbe essere fortemente ridatta in caso di non osservazione della più grande cauzione alla loro manipolazione.
Durante le riparazioni occorre quindi essere collegato allo stesso potenziale che quello della massa dell'apparecchio tramite un braccialetto a resistenza.
Assicurarsi che i componenti e anche gli utensili con quali si lavora siano anche a questo potenziale.

(GB)

Safety regulations require that the set be restored to its original condition and that parts which are identical with those specified, be used.

(NL)

Veiligheidsbepalingen vereisen, dat het apparaat bij reparatie in zijn oorspronkelijke toestand wordt teruggebracht en dat onderdelen, identiek aan de gespecificeerde, worden toegepast.

(F)

Les normes de sécurité exigent que l'appareil soit remis à l'état d'origine et que soient utiliséés les piéces de rechange identiques à celles spécifiées.

(D)

Bei jeder Reparatur sind die geltenden Sicherheitsvorschriften zu beachten. Der Original zustand des Geräts darf nicht verändert werden; für Reparaturen sind Original-Ersatzteile zu verwenden.

(I)

Le norme di sicurezza esigono che l'apparecchio venga rimesso nelle condizioni originali e che siano utilizzati i pezzi di ricambio identici a quelli specificati.

"After servicing and before returning set to customer perform a leakage current measurement test from all exposed metal parts to earth ground to assure no shock hazard exist. The leakage current must not exceed 0.5mA."

"Pour votre sécurité, ces documents doivent être utilisés par des spécialistes agréés, seuls habilités à réparer votre appareil en panne".

(GB) Warning !

Invisible laser radiation when open.
Avoid direct exposure to beam.

(S) Varning !

Osynlig laserstrålning när apparaten är öppnad och spärren är urkopplad. Betrakta ej strålen.

(SF) Varoitus !

Avatussa laitteessa ja suojalukituksen ohitettaessa olet alttiina näkymättömälle laserisäteilylle. Älä katso säteeseen!

(DK) Advarse !

Usynlig laserstråling ved åbning når sikkerhedsafbrydere er ude af funktion. Undgå udsaettelse for stråling.

English

GENERAL INFORMATION

General Information

- The typeplate is located at the rear of the set.
- Recording is permissible if copyright or other rights of third parties are not infringed.

1 All unnecessary packaging material has been omitted. We have tried to make the packaging easy to separate into three mono-materials:
- cardboard (box)
- expandable polystyrene (buffer)
- polyethylene (bags, protective foam sheet).

Please observe the local regulations regarding the disposal of these packaging materials.

2 Your set consists of materials which can be recycled and reused if disassembled by a specialized company. Please follow local regulations on recycling your old set.

3 Do not dispose of dead batteries with your household waste. Dispose of batteries according to local regulations.

4 Note: Switching off the standby mode overnight (remove the AC power cord from the wall socket) will save energy.

Accessories (Supplied)

- Remote control
- Batteries (2 x AAA) for remote control
- AM loop antenna
- FM antenna wire
- AC power cord

SAFETY INFORMATION

Safety Information

- Before operating the system, check that the operating voltage indicated on the typeplate (or the voltage indication beside the voltage selector) of your system is identical with the voltage of your local power supply. If not, please consult your dealer. The type plate is located at the rear of your system.
- When the system is switched on, do not move it around.
- Place the system on a solid base (e.g. a cabinet).
- Place the system in a location with adequate ventilation to prevent internal heat build-up in your system.
- Do not expose the system to excessive moisture, rain, sand or heat sources.
- Under no circumstances should you repair the unit yourself, as this will invalidate the warranty!
- If the system is brought directly from a cold to a warm location, or is placed in a very damp room, moisture may condense on the lens of the CD unit inside the system. Should this occur, the CD player will not operate normally. Leave the power on for about one hour with no disc in the unit until normal playback is possible.
- Electrostatic discharge may cause unexpected problems. See whether these problems disappear if you unplug the AC power cord and plug it in again after a few seconds.
- **To disconnect the system from the power supply completely, remove the AC power plug from the wall socket.**

PREPARATIONS

English

Inserting the batteries into the remote control

- Insert the batteries (Type R03 or AAA) into the remote control as shown inside the battery compartment.

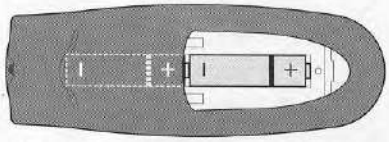

- To avoid damage from possible battery leakage, remove dead batteries or batteries that will not be used for a long time. For replacement use type R03 or AAA batteries.

Rear Connection

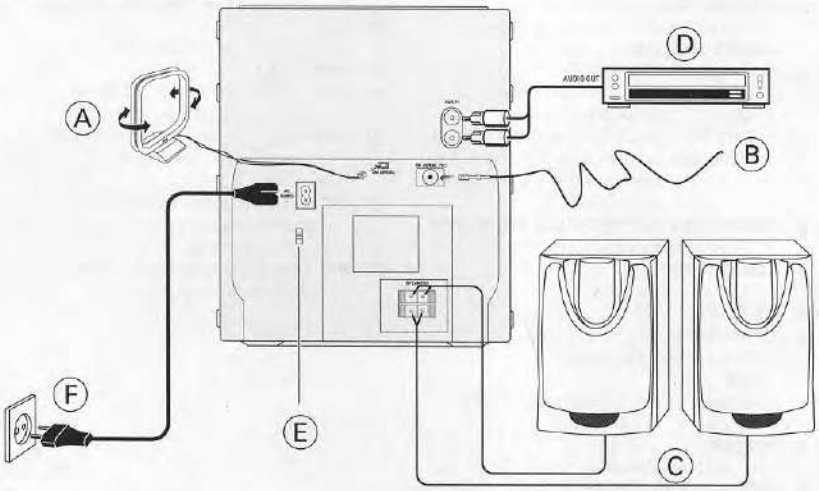

Ⓐ AM Antenna Connection

Connect the supplied loop antenna to the AM AERIAL terminal. Adjust the position of the AM loop antenna for the best reception.

Ⓑ FM Wire Antenna Connection

Connect the supplied FM wire antenna to the FM 75 Ω terminal. Adjust the position of the FM antenna for the best reception.

Outdoor Antenna

For better FM stereo reception connect an outdoor FM antenna to the FM AERIAL 75 Ω terminal using a 75 Ω coaxial wire.

PREPARATIONS

English

Ⓒ Speaker Connections

- Connect the right speaker to terminal **R**, with the red wire to + and the black wire to −.
- Connect the left speaker to terminal **L**, with the red wire to + and the black wire to −.
- Clip the stripped portion of the speaker wire as shown.

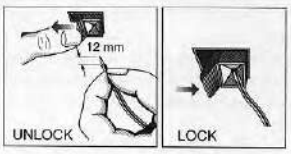

Ⓓ Connecting other equipment to your system

You can connect the TV, Laser Disc or VCR audio left and right output terminals to the AUX IN terminal at the rear of the system.

Ⓔ Adjusting the Operating Voltage

(for specific versions only)

Before connecting the AC power cord to a wall outlet, make sure that the voltage selector at the rear of the system is set to the local power line voltage. If not, reset the selector before connecting to the wall outlet.

Ⓕ AC Power Supply

After all other connections have been made, connect the AC power cord to the set and to the wall outlet.

CONTROLS

Front View

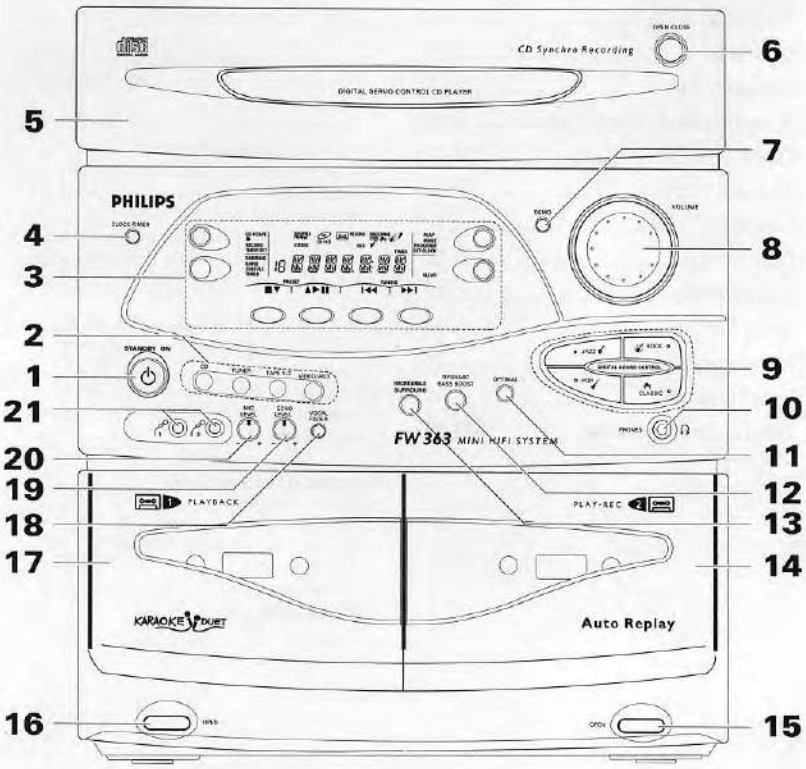

CONTROLS

English

Front View

1 STANDBY-ON
– to switch the set on or to standby mode.

2 SOURCE SELECTION
– to select the following:
TUNER : to switch to Tuner mode.
CD : to switch to CD mode.
TAPE 1-2 : to switch to Tape Deck 1 or 2 mode.
VIDEO/AUX: to switch to VIDEO/AUX mode (for external sources, e.g. TV, Laser Disc or VCR sound).

3 MAGIC MENU USER INTERFACE AND DISPLAY
– to select and display the control functions.

4 CLOCK•TIMER
– to set the clock or timer.

5 CD TRAY

6 OPEN•CLOSE
– to open or close the CD tray.

7 DEMO
– to display the various features offered by the system.

8 VOLUME
– to adjust the volume level.

9 DIGITAL SOUND CONTROL (DSC)
– to select the desired sound effect : JAZZ, ROCK, CLASSIC or POP.

10 PHONES 🎧
– to connect headphones jack.

11 OPTIMAL
– to select the sound setting that is tuned to the acoustics of the supplied speakers.

12 DYNAMIC BASS BOOST (DBB)
– to switch on bass boost to enhance bass response or to switch off bass boost.

13 INCREDIBLE SURROUND
– to switch on or off the incredible surround sound effect.

14 TAPE DECK 2

15 OPEN
– to open TAPE DECK 2 cassette compartment.

16 OPEN
– to open TAPE DECK 1 cassette compartment.

17 TAPE DECK 1

18 VOCAL FADER *(for specific versions only)*
– to fade out the vocal of the original song.

19 ECHO LEVEL *(for specific versions only)*
– to adjust the echo level for karaoke or microphone recording.

20 MIC LEVEL *(for specific versions only)*
– to adjust the mixing level for karaoke or microphone recording.

21 MIC 1 and 2 *(for specific versions only)*
– to connect microphones jack.

REMOTE CONTROL

English

Remote Control Functions

- First select the source you wish to control by pressing one of the source selection keys on the remote control (e.g. CD, TUNER, TAPE or VIDEO/AUX).
- Then select the desired function (PLAY, NEXT, etc.).

Notes:
- *Whenever a remote control button is pressed, the source icon on the set display will flicker. This indicates the remote control signal is received by the set.*
- *For TV/VCR operation, the accessory TV or VCR must use the RC-5 code remote control system.*

⏻ ..... to switch the unit to standby mode.
CD ..... to select CD mode.
VIDEO/AUX ..... to select VIDEO/AUX or external mode.
TAPE ..... to select TAPE 1/2 mode.
TUNER ..... to select TUNER mode.
INC. SURR. ..... to switch on or off the incredible surround sound effect.
DSC ..... to select digital sound control: JAZZ, ROCK, CLASSIC, POP or OPTIMAL.
DBB ..... to switch on and off dynamic bass boost.
DISC UP ..... not functional for this model.
PROG. +/− ..... to select previous/next channel for TV/VCR.
VOL. +/− ..... to adjust the TV volume
TV ..... to select TV mode.
PAUSE ❚❚ ..... to interrupt playback in CD or Tape mode.
◀◀ / ▶▶
for TUNER ..... to select a lower/higher frequency.
for CD ..... to search for a particular passage.
for Tape ..... to fast forward/rewind the cassette.

VOLUME +/− ...to adjust the volume of the system.
PLAY ▶ ..... to start playback in CD or Tape mode.
STOP ■ ..... to stop playback in CD or Tape mode.
|◀ PREV. / NEXT ▶|
for TUNER ..... to select a lower/higher tuner preset station.
for CD ..... to select previous/next CD track.

OPERATING THE SYSTEM

English

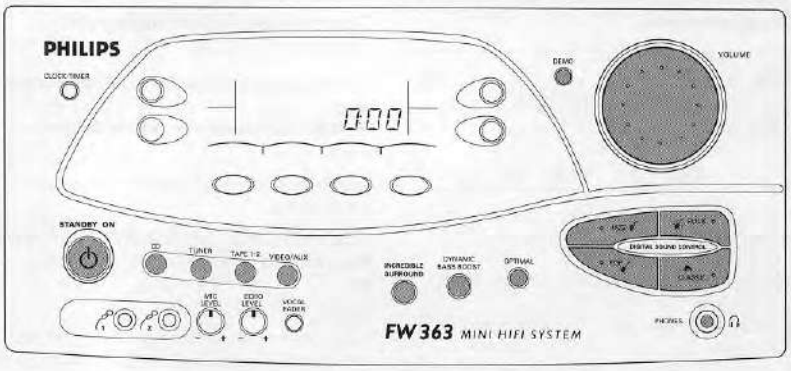

Demo mode

The system has a demonstration mode that shows the various features offered by the system. Whenever the system is connected to an AC power source, the demonstration mode will start automatically.

To stop demonstration mode
- Press **DEMO**, **STANDBY - ON**, **CD**, **TUNER**, **TAPE 1-2**, **VIDEO/AUX** or CD **OPEN•CLOSE** button on the system (or ⏻, **CD**, **TUNER**, **TAPE** or **VIDEO/AUX** on the remote control) to stop the demonstration.

To switch on demonstration mode
- Press **DEMO**.
  → The display will show "WELCOME TO THE AUDIO WORLD", then a demonstration of the various features will follow.

Important:
Before you begin operating the system, complete the preparation procedures.

Switching the system ON

- Press **STANDBY-ON**, **CD**, **TUNER**, **TAPE 1-2** or **VIDEO/AUX** (or **CD**, **TUNER**, **TAPE** or **VIDEO/AUX** on the remote control).

Switching the system to standby mode

- Press **STANDBY-ON** again (or ⏻ on the remote control).

Selecting the Sound Source

- Press the respective source button: **CD**, **TUNER**, **TAPE 1-2** or **VIDEO/AUX** (or **CD**, **TUNER**, **TAPE** or **VIDEO/AUX** on the remote control).
  → The display indicates the selected sound source.

Note:
For an external sound source, make sure that you have connected the audio left and right output terminals of the external equipment (TV, VCR or Laser Disc player) to the AUX IN terminals at the rear of the set.

Volume Adjustment

Turn **VOLUME** right or left (or press **VOLUME +** or **−** on the remote control) to increase or decrease the sound level.

For Personal Listening
Connect the headphones to the PHONES 🎧 socket (3.5mm). The speakers will be muted.

Digital Sound Control (DSC)

- To enjoy a special sound effect, press **JAZZ** ( ), **ROCK** ( ), **CLASSIC** ( ) or **POP** ( ).
- You can also press **DSC** on the remote control to select the respective sound setting, including **OPTIMAL**.

Optimal Sound

- Press **OPTIMAL** to hear the sound setting that is tuned to the acoustics of the supplied speakers.

English

Dynamic Bass Boost (DBB)

- Press **DBB** to enhance the bass response.
  → The DBB flag lights up.

Incredible Surround

- In additional to all other sound settings, you can switch on or off the incredible surround sound feature by pressing **INCREDIBLE SURROUND**.

  → This creates a phenomenal surround sound effect even if the speakers are positioned close to the system. The sound becomes "incredibly" spatial.
  → The INCREDIBLE SURROUND button lights up.

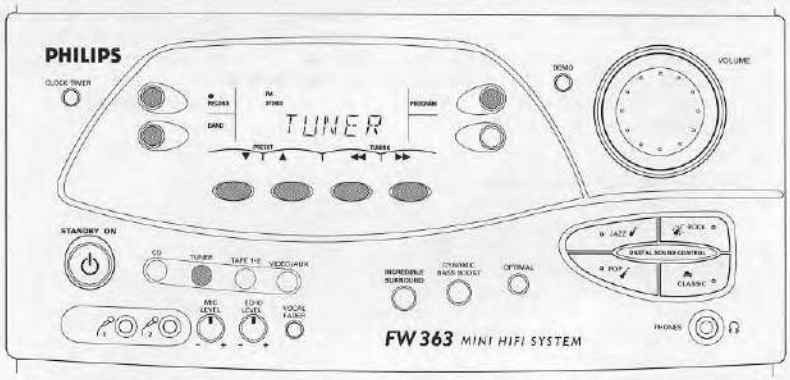

Tuning to radio stations

1 Press **TUNER** on the unit or on the remote control to select TUNER mode.
  → First 'TUNER' appears on the display and after a few seconds it will show the current frequency. The available display button functions light up:

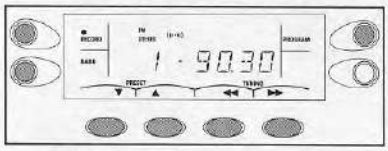

2 Press BAND to select the desired waveband : FM or MW.

3 Press TUNING ◀◀ or ▶▶ for more than one second and release.
  → The display will show 'SEARCH' until a station with sufficient signal strength is found.

- Repeat this procedure until the desired station is reached.
- To tune to a weak station, briefly press TUNING ◀◀ or ▶▶ until the display shows the right frequency and/or when the best reception has been obtained.

Note:
If you briefly press TUNING ◀◀ or ▶▶ (◀◀ or ▶▶ on the remote control), the frequency changes step by step.

English

Storing Preset Stations

You can store up to 20 stations in the memory. When a preset station is selected, the preset number appears next to the frequency on the display.

Automatic programming

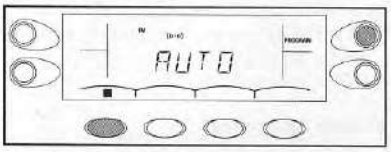

1 Press **TUNER** on the unit or on the remote control.
2 Press PROGRAM for more than one second.
  → PROGRAM flashes and 'AUTO' is displayed.
  → Every available station will be stored automatically. The frequency and preset number will be displayed briefly.
  → It will stop searching when all the available stations are stored or the memory for 20 preset stations is used.
  → The set will remain tuned to the last stored preset number.

- You can cancel the automatic programming by pressing PROGRAM or ■.

Note:
If you want to reserve a section of preset numbers, for example preset number 1 to 9, select preset 10 before starting automatic programming; now only the preset numbers 10 to 20 will be programmed.

Manual programming

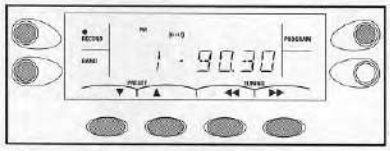

1 Press **TUNER** on the unit or on the remote control.
2 Press PROGRAM for less than one second.
  → PROGRAM flashes on the display.
3 Press BAND to select the desired waveband : FM or MW.
4 Press TUNING ◀◀ or ▶▶ to tune to the desired frequency.
5 Press PRESET ▼ or ▲ (or **PREV** ⏮ / **NEXT** ⏭ on the remote control) to select a preset number.
6 Press PROGRAM again.
  → PROGRAM stop flashing, and the station is stored.

- Repeat the above procedure to store other preset stations.

Tuning to Preset Stations

- Press PRESET ▼ or ▲ (or **PREV** ⏮ / **NEXT** ⏭ on the remote control) to select the desired preset number.
  → The preset number, frequency and waveband appear on the display.

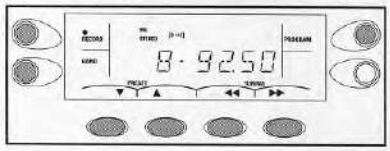

Changing the FM/MW tuning grid

(for specific versions only)

For FM Band : change from 50kHz to 100kHz or vice versa
For MW Band : change from 9kHz to 10kHz or vice versa

Changing of tuning grid will erase all previously stored preset stations.

While in TUNER mode, press the **TUNER** button for ***more than 5 seconds***. Display will shows 'GRID 10' or 'GRID 9'.

Note:
GRID 9 indicates that the tuning grid is in step of 50kHz in FM band or 9kHz in MW band. GRID 10 indicates that the tuning grid is in step of 100kHz in FM band or 10kHz in MW band.

CASSETTE DECK

English

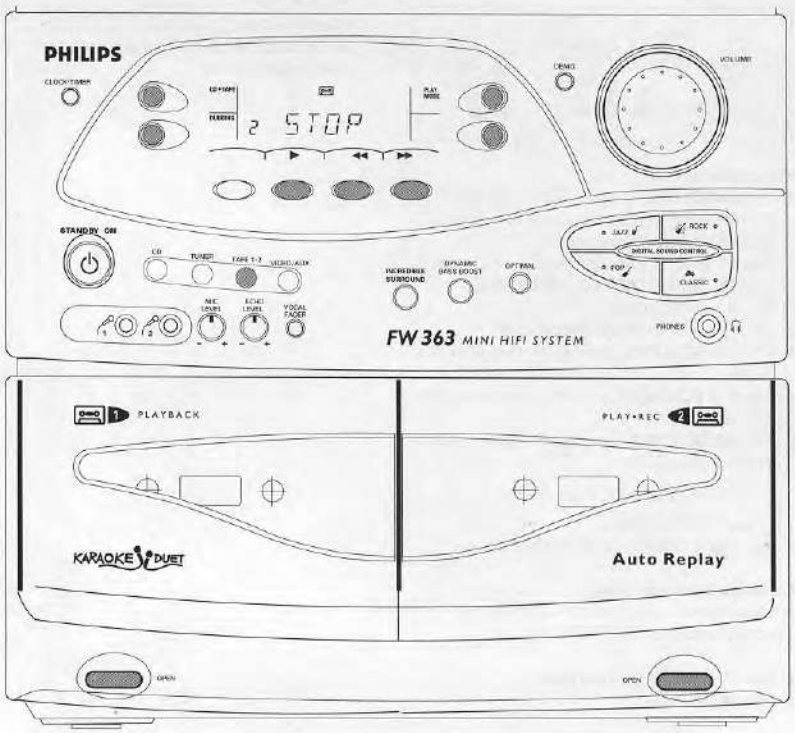

Loading a cassette

- Press **OPEN**.
- The cassette compartment door opens.
- Load the cassette with the open side downward and the full spool to the left.
- Close the cassette compartment door.
  → The deck automatically selects the cassette type (NORMAL or CHROME (CrO_2).

Tape Playback

1 Press **TAPE 1-2** (or **TAPE** on the remote control) to select either TAPE DECK 1 or TAPE DECK 2 mode.

2 Load the cassette into the desired **cassette deck**.
3 Press ▶ (or **PLAY** ▶ on the remote control) to start playback.

4 Press ■ (or **STOP** ■ on the remote control) to end playback.

CASSETTE DECK

English

Note:
When the cassette has stopped playing, the set will switch to the standby mode automatically after 15 minutes if no button is pressed.

Auto Replay

The PLAY mode enables you to select AUTO REPLAY mode for both Tape Deck 1 and 2.

- Default setting of set is with AUTO REPLAY mode.
- Press PLAY mode once, display scrolls 'ONCE' message once and **ONCE** mode is selected.
- Press PLAY mode again, display scrolls 'AUTO REPLAY' message once and **AUTO REPLAY** mode is selected.

AUTO REPLAY:
– When the cassette reaches its end during tape play, it will rewind by itself to the beginning and starts playing again. This will be repeated for 10 times. During the rewinding of the cassette, display keeps scrolling 'AUTO REPLAY'.

ONCE:
– When the cassette reaches its end during tape play, it will stop.

Note:
This feature is only applicable during Tape Play.

Winding/Rewinding

At the stop mode
1 You can rewind or wind the cassette by pressing ◀◀ or ▶▶, (◀◀ or ▶▶ on the remote control) respectively.
→ The cassette will stop automatically at the end of the winding or rewinding
2 Press ■ (or **STOP** ■ on the remote control) to stop winding or rewinding.

During playback
1 You can search for a particular passage or beginning of a track by pressing and holding ◀◀ or ▶▶, (◀◀ or ▶▶ on the remote control) respectively.
→ During searching, the sound is reduced to a low volume.
→ When you release ◀◀ or ▶▶, the cassette continues playing.

Note:
During winding or rewinding a cassette, it is possible to select another source mode (e.g. TUNER, CD or VIDEO/AUX mode).

Recording from other sources (only on Tape Deck 2)

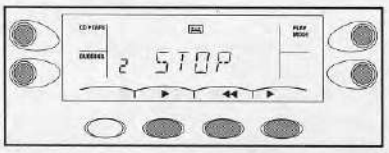

1 Press **TAPE 1-2** to select **tape deck 2**.
2 Load a blank cassette into **tape deck 2**.
3 Press **CD**, **TUNER** or **VIDEO/AUX**.
4 Press ● RECORD to start recording.
→ The RECORD flag starts flashing.
5 Press ■ to stop recording.

Note:
During recording, it is not possible to listen to another sound source.

Dubbing cassettes (from Tape Deck 1 to Tape Deck 2)
1 Press **TAPE 1-2** to select **tape deck 2**.
2 Load the prerecorded cassette into **tape deck 1** and a blank cassette into **tape deck 2**.
→ Make sure that both cassettes have their full spools to the left.
3 Press DUBBING and then press ◀◀ or ▶▶ for respective dubbing speed mode.
→ NORMAL (normal speed) or FAST (high speed) appears on the display.
4 Press DUBBING again to start recording.
→ The RECORD flag starts flashing.
→ HSD appears on the display for high speed dubbing.
5 Press ■ to stop dubbing.

Notes:
– *At the end of side A, flip the cassettes to side B and repeat the procedure.*
– *Dubbing of cassettes is only possible in the TAPE DECK 2. To ensure good dubbing, use cassettes of the same length.*
– *During high speed dubbing in Tape mode, the sound is reduced to a low volume.*
– *You can switch to other sound source while dubbing.*

CASSETTE DECK

English

General Information

- For recording, use only a cassette of IEC type I (normal cassette) or IEC type II (Chrome). The respective cassette type is selected automatically.
- The tape in the cassette is secured at both ends with leader tape. At the beginning and end of a cassette, nothing will be recorded for six to seven seconds.
- The recording level is set automatically, regardless of the position of VOLUME.
- Check and tighten slack tape with a pencil before use. Slack tape may get jammed or may burst in the mechanism.
- To prevent accidental recording, break out the tab on the left shoulder of the cassette side you want to protect. To re-record the cassette, cover each hole with cellophane tape. Do not cover the Chrome tape detection hole when covering the tab opening.

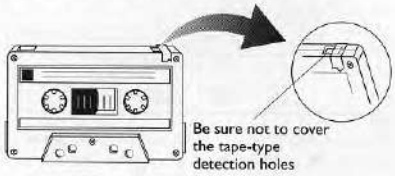

- C-120 tape is extremely thin and may be easily deformed or damaged. It is not recommended for use in this unit.
- Store the cassettes at room temperature and do not put them too close to a magnetic field (for example, transformers, TVs or speakers).

KARAOKE

Karaoke *(for specific versions only)*

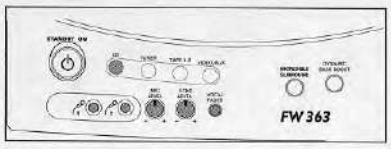

Microphone mixing

1 Set the **MIC LEVEL** control to the minimum level to prevent acoustic feedback (e.g. a loud howling sound) before you connect the microphone.
2 Connect either 1 or 2 microphones to the mic socket.
3 Press **CD**, **TUNER**, **TAPE 1-2** or **VIDEO/AUX**.
4 Play the selected source.
5 Adjust the volume with **VOLUME** control.
6 Adjust the **MIC LEVEL** control to the mixing level that you want.
7 Adjust the **ECHO LEVEL** control to the echo level that you want.
8 Press **VOCAL FADER** to suppress the vocals on special recorded Karaoke CDs.
→ When the VOCAL FADER is switched on, the appears on the display.
9 Start singing or talking through the microphone.

Recording the mixed sound

During microphone mixing, you can record the mixed sound on a cassette in TAPE DECK 2.

1 Load a blank cassette in **tape deck 2**.
2 Press ● RECORD .

Notes:
1. *For maximum VOCAL FADER effect, you are advised to switch off the Incredible Surround.*
2. *If you do not intend to record via the microphone, unplug the microphone to avoid accidental mixing with other recording source.*

COMPACT DISC

English

Warning!

1) This set is designed for conventional CDs. Do not use any accessories like disc stabilizer rings or CD treatment sheets, etc, which may damage the CD mechanism.
2) Do not load more than one disc into the tray.

In addition to the conventional 12-cm disc, 8-cm disc can also be used without an adaptor.

Loading a Disc

1 Press **CD** on the unit or remote control to select CD mode.
2 Press **OPEN•CLOSE**.
→ The CD tray slides out.
3 Load a disc with ***printed side up***.
4 Press **OPEN•CLOSE** to close the CD tray.
→ The total number of tracks and playing time appear on the display.

Playing a Disc

1 Press ▶ (or **PLAY** ▶ on the remote control) to start play.
→ The track number and elapsed playing time of the current track appear on the display.

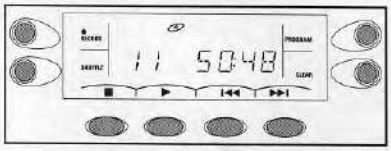

- To interrupt play, press ❚❚ (or **PAUSE** ❚❚ on the remote control).
→ The playing time flashes.
- To resume play, press ▶ again (or **PLAY** ▶ on the remote control).

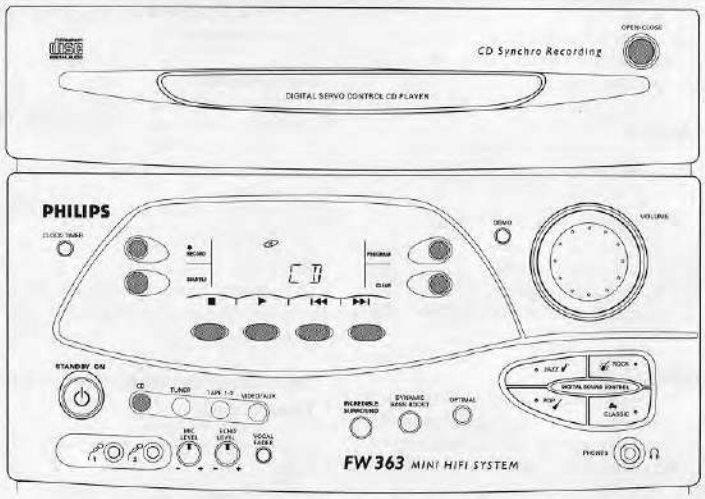

2 To stop play, press ■ (or **STOP** ■ on the remote control).

Note:
When the CD has stopped playing, the set will switch to the standby mode automatically after 15 minutes if no button is pressed.

Selecting a desired track

Selecting a desired track at the stop mode

1 Press ⏮ or ⏭ (or **PREV** ⏮ / **NEXT** ⏭ on the remote control) until the desired track appears on the display.
2 Press ▶ (or **PLAY** ▶ on the remote control) to start playback.
→ The selected track number and elapsed playing time appear on the display.

Selecting a desired track during play mode

1 Press ⏮ or ⏭ (or **PREV** ⏮ / **NEXT** ⏭ on the remote control) until the desired track appears on the display.
→ The selected track number and elapsed playing time appear on the display.
- If you press ⏮ once it will skip to the beginning of the current track and play the track again.

COMPACT DISC

English

Searching for a particular passage during play

- Press and hold ⏮ or ⏭ (◀◀ or ▶▶ on the remote control) until the desired passage is located. During the search, the sound is played faster than normal at a reduced volume. Play returns to normal when ⏮ or ⏭ is released.

Shuffle

SHUFFLE – playing all the tracks in random order. It can also be used when tracks are programmed.

To shuffle all the tracks

1 Press SHUFFLE.
→ "SHUFFLE" flashes briefly on the display.
→ The SHUFFLE flag, the track selected at random appear on the display.
- The tracks will now be played in random order until you press ■.

2 Press SHUFFLE again to resume normal playback.
→ The SHUFFLE flag disappears from the display.

Programming Tracks

Programming tracks of a loaded CD is possible when CD playback is stopped. The display will indicate the total tracks stored in the program. Up to 20 tracks can be stored in the memory in any order. When 20 tracks are stored and you attempt to store another track, the display will show "PROGRAM FULL".

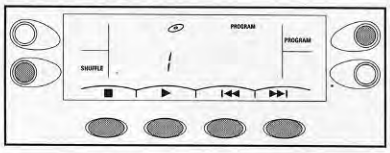

1 Load the desired disc in the disc tray.
2 Press PROGRAM to start programming.
→ The PROGRAM flag flashes on the display.
3 Press ⏮ or ⏭ to select the desired track.
4 Press PROGRAM to store the track.
- Repeat steps **3** to **4** to store other tracks.

5 Press ■ once to end programming.
→ The total number of tracks programmed and total playing time will appear on the display.

Playing the program

1 Press ▶ again (or **PLAY** ▶ on the remote control) to start program playback.
→ The track number and elapsed playing time of the current track will appear on the display.
2 Press ■ (or **STOP** ■ on the remote control) to stop program playback.

Reviewing the program

Reviewing of a program is only possible when CD playback is stopped.
- Press ⏮ or ⏭ repeatedly to review the programmed tracks.
- Press ■ to exit review mode.

Erasing the program (when playback is stopped)
- Press CLEAR.
→ "PROGRAM CLEARED" appears on the display.

Note:
The program is also erased when the set is disconnected from the power supply. If the CD tray is opened, the programmed tracks will be erased and "CLEARED" will scroll on the display once.

CD Synchro Start Audio Recording

During CD synchro start audio recording,
- It is not advisable to fast forward/rewind your cassette in TAPE DECK 1.
- It is not possible to listen to another sound source.

1 Press **CD** on the unit or on the remote control to select CD mode.
2 Load a disc into the disc tray.
3 You can program the tracks in the order you want them to be recorded (see Programming Tracks). If not, the tracks are recorded according to the disc.
4 Press **TAPE 1-2** (or **TAPE** on the remote control) to select **tape deck 2**.

5 Load a blank cassette (full spool to the left) into **tape deck 2**.
6 Press CD ▶ TAPE to start recording.
→ The RECORD flag flashes on the display.
→ The CD starts playing after a seven-second delay to prevent recording on the leader tape at the beginning of the cassette.

7 Press ■ to stop recording.

CLOCK SETTING

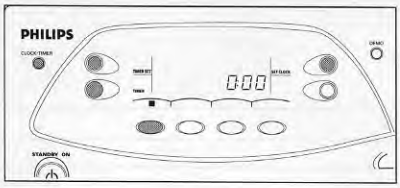

Setting the clock

The clock is in 24-hour mode, e.g. 00:00 or 23:59.

1 Press **CLOCK•TIMER**.
→ "0:00" starts flashing.

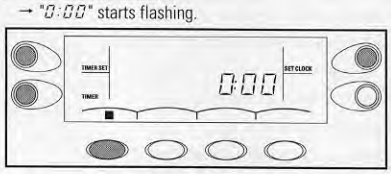

2 Press SET CLOCK.
→ "00:00" starts flashing.

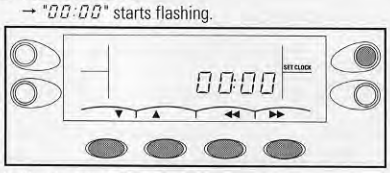

3 Set the hour with ▼ or ▲.
4 Set the minutes with ◀◀ or ▶▶.
5 Press SET CLOCK again to store the setting.
→ The clock starts running.

Note:
When a power interruption occurs, the clock settings are erased.

TIMER SETTING

English

Setting the Timer

- The system can switch on to CD, TUNER or TAPE 1 mode automatically at a preset time. It can serve as an alarm to wake you up. After half an hour from the preset time, the system will return to the standby mode if no button is pressed.
- Before setting the timer, make sure the clock is set correctly.
- The timer works only once for each setting.
- **The volume of the timer will be at the last setting before the set is switched to standby mode.**

Timer Setting

1 Press **CLOCK•TIMER**.
2 Press TIMER SET.
→ The TIMER flag flashes.

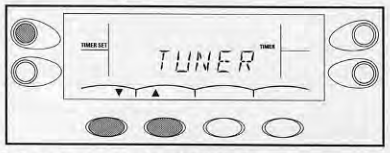

3 Press ▼ or ▲ to select the desired source.
→ The display will switch as follows:
TUNER → CD → TAPE 1 → TUNER ...
4 Press TIMER SET to confirm your selection.
→ The display will show "ON 00:00" and "00:00" flashes.

5 Press ▼ or ▲ to set the hour for the timer to start.
6 Press ◀◀ or ▶▶ to set the minutes for the timer to start.
7 Press TIMER SET to store the start time.
→ The TIMER is now set.
→ The TIMER flag remains lit.

To stop the TIMER
1 Press **CLOCK•TIMER**.
2 Press TIMER on the set.
→ The TIMER is now off.

To start the TIMER again
1 Press **CLOCK•TIMER**.
2 Press TIMER on the set.
→ The display will show the last set start time of the TIMER and its flag.
→ The TIMER flag remains lit.

Notes:
1. *If the source selected is TUNER, the last tuned frequency will be switched on.*
2. *If the source selected is CD, the first track of the disc will be played. If the CD tray is empty, the TUNER source will be selected instead.*
3. *If the source selected is TAPE 1, when the preset time is reached during high speed dubbing, the TUNER source will be selected instead.*

MAINTENANCE

English

Maintenance

Cleaning the Cabinet

- Use a soft cloth slightly moistened with a mild detergent solution. Do not use a solution containing alcohol, spirits, ammonia or abrasive.

Cleaning Discs

- When a disc becomes dirty, clean it with a cleaning cloth. Wipe the disc from the center out.
- Do not use solvents such as benzine, thinner, commercially available cleaners, or antistatic spray intended for analog records.

Cleaning the Heads and the Tape Paths

- To ensure good recording and playback quality, clean the heads Ⓐ and Ⓓ, the capstan(s) Ⓑ, and pressure roller(s) Ⓒ after every 50 hours of tape operation.

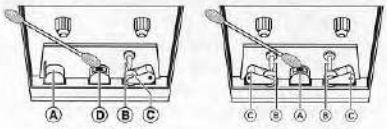

Tape Deck 1 **Tape Deck 2**

- Use a cotton swab slightly moistened with cleaning fluid or alcohol.
- You can also clean the head by playing a cleaning tape through once.

Demagnetizing the heads

- Use a demagnetizing cassette available at your dealer.

SPECIFICATIONS

Specifications

AMPLIFIER

Output power ..... 600 W PMPO / ..... 2 x 25 W RMS (10% THD, 3 Ω, ±1 dB)
Power band width ..... 40 - 20000 Hz
Frequency response ..... 40 - 20000 Hz
Signal-to-noise ratio ..... ≥ 75 dBA
Stereo separation ..... ≥ 48 dB (1 kHz)
Input sensitivity
Auxiliary ..... 400 mV
Microphone *(for specific versions only)* ..... 2.5 mV
Outputs
Speakers ..... ≥ 3 Ω
Headphones ..... 32 Ω - 1000 Ω

TUNER

FM wave range ..... 87.5 - 108 MHz
MW wave range
9 kHz Grid ..... 531 - 1602 kHz
10 kHz Grid ..... 530 - 1700 kHz
Sensitivity at 75 Ω, 26 dB S/N ratio, FM mono ... 2.8 µV
46 dB signal-to-noise ratio, FM Stereo ..... 41.2 µV
FM Frequency response ..... 63 - 12500 Hz (±3 dB)
Signal-to-noise ratio ..... ≥ 50 dBA
Total Harmonic Distortion ..... < 3%

CD PLAYER

Frequency range ..... 20 - 20000 Hz
Signal-to-noise ..... ≥ 86 dBA
Channel separation ..... ≥ 40 dB
Total harmonic distortion ..... ≤ 65 dB

CASSETTE DECK

Frequency range
CrO_2 tape (type II) ..... 80 - 12500 Hz (±8 dB)
Normal tape (type I) ..... 80 - 12500 Hz (±8 dB)
Signal-to-noise ratio
CrO_2 tape (type II) ..... ≥ 48 dBA
Normal tape (type I) ..... ≥ 44 dBA
Wow and flutter ..... ≤ 0.4% DIN

MAIN UNIT

Material/finish ..... Metal and polystyrene
Dimensions (w x h x d) ..... 265 x 316 x 363 (mm)
Weight ..... 6.7 kg approx.

SPEAKER BOX

Dimensions (w x h x d) ..... 210 x 310 x 220 (mm)
Weight ..... 2.8 kg approx.
Speaker woofer ..... 1 x 5.25 inches
Speaker tweeter ..... 1 x 2.5 inches
Speaker polydome tweeter ..... 1 x 1 inch

Subject to modification

TROUBLESHOOTING GUIDE

English

Warning! Under no circumstances should you try to repair the set yourself, as this will invalidate the warranty.

- If a fault occurs, check the points listed below before taking the set in for repair.
- Should any problems persist after you have made these checks, consult your nearest dealer or service center.

SYMPTOM	POSSIBLE CAUSE	REMEDY
RADIO RECEPTION		
The STEREO indicator flashes.	The signal is too weak.	Adjust the antenna.
Severe hum or noise.	The signal strength is too weak.	Adjust the antenna.
	The TV or VCR is too close to the stereo system.	Separate the stereo system from the TV or VCR. Connect an external antenna for better reception.
CASSETTE DECK OPERATION		
"CANNOT RECORD" is displayed.	No cassette in the cassette deck.	Insert a blank cassette into the cassette deck.
	The protection tab has been broken.	Put a piece of clear adhesive tape over the opening.
"RECORDING ACTIVE" is displayed.	A recording is active.	Stop the recording or wait unitl it is finished.
Recording or playback cannot be made or there	Dirty tape heads.	See section on cassette deck maintenance.
is a decrease in audio level.	Magnetic build-up in the record/playback head.	Use demagnetizing cassette.
Excessive wow or flutter, or sound drop-out.	Contamination of the capstans or pressure rollers.	See section on cassette deck maintenance.
CD PLAYER OPERATION		
"WRONG TRACK" is displayed.	The selected track number does not exist on this CD or it is not included in this program	Select a correct track number.
"NO DISC" is displayed.	The disc is inserted upside down.	Place CD with printed side up.
	Moisture condensation.	Wait until lens has adjusted to normal room temperature.
	There is no disc in the CD tray.	Insert a CD.
	The CD is dirty, badly scratched or warped.	Replace or clean the CD.

TROUBLESHOOTING GUIDE

English

GENERAL		
Set not working.	Set does not react when buttons are pressed.	Press STANDBY-ON to switch the unit off, then switch it on again. Or, unplug the AC power plug from the wall outlet, then plug it in again.
No or poor sound.	Volume is not turned up.	Adjust VOLUME.
	The headphones are connected.	Disconnect the headphones.
	Speakers are not connected or are connected wrongly.	Check that the speakers are connected correctly.
		Make sure that the stripped speaker wire is clamped.
Reversed left and right sound.	Speakers are connected wrongly.	Check the speaker connections and speaker location.
Lack of bass sound or apparently imprecise physical location of musical instruments.	Speakers are connected wrongly.	Check the speaker connection for proper phasing, red/black wires to red/black terminals.
Clock blinking.	There was a power disruption.	Reset the clock.
Remote control has no effect on the set.	The distance to the system is too large.	Reduce the distance.
	Batteries are inserted incorrectly.	Insert the batteries correctly.
	Batteries are exhausted.	Replace the batteries.
	Wrong sound source is selected.	Select the sound source before pressing the function button (PLAY, PREV./NEXT, etc.).
Timer not working.	Timer not on.	Press CLOCK•TIMER on the set to switch on the timer.
	Dubbing/recording is active.	Stop dubbing/recording.
"PRESS DEMO TO EXIT" is displayed.	Demo mode is switched on.	Press STANDBY-ON or DEMO to switch off the demo.

Dismantling & Service hints

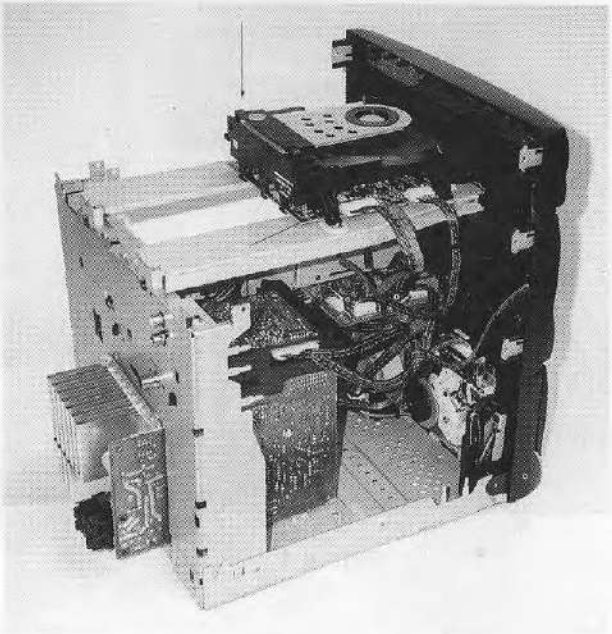

Figure 1

1) Remove the top cabinet.
2) Remove the 2 screw on the CD module.

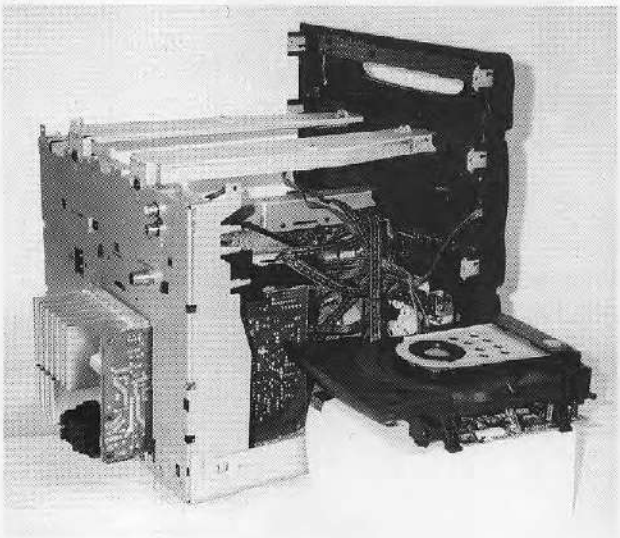

Figure 2

3) Place the CD module on the side for servicing.

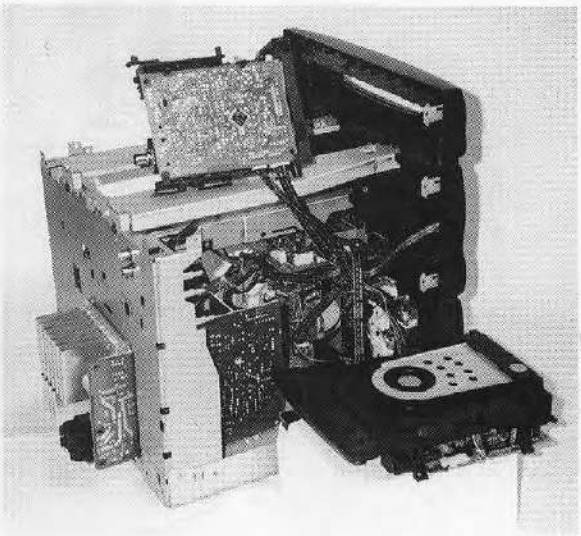

Figure 3

4) Remove the screw for the tuner on the back panel.
Figure 3 show the tuner & CD service

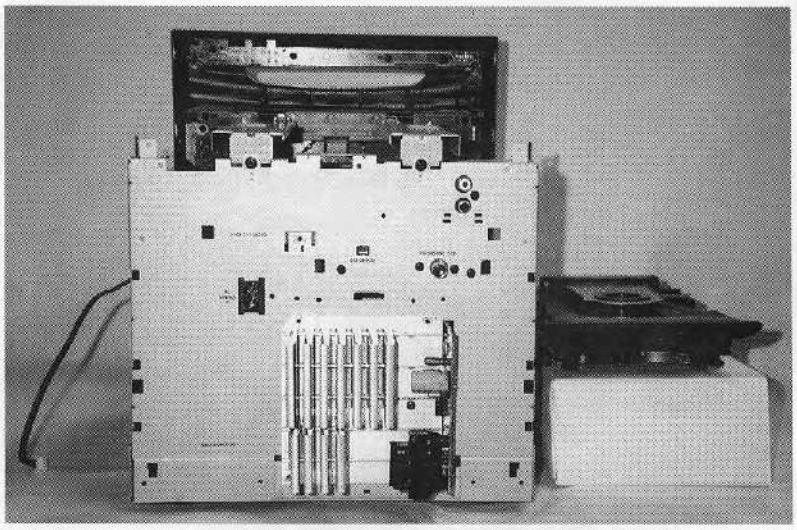

Figure 4

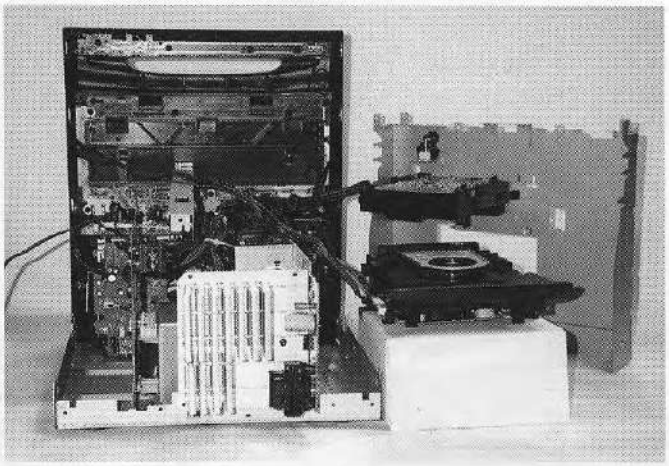

Figure 5

5) Remove the back panel in-order to service the power, transformer board or the AF & front board. Figure 5 show the possible service position.

SERVICE TEST PROGRAM

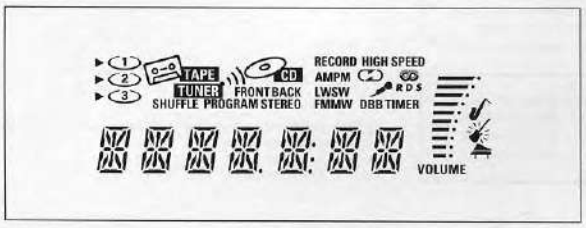

Figure 1

To start service test program hold Program & Preset Up depressed while plugging in the mains cord

Display shows set version and number of ROM version "S yy xxxxxx" (Main menu)

1) S stands for Service Testprogram

yy stands for software version number of uP on Front Board (counted from 01 upwards)

xxxxxx stands for model numbers (NOT APPLICABLE IN SERVI

DISPLAY TEST

DEMO Button pressed? (N / Y)

Display shows Fig. 1 (DBB & Incredible sound LED lights up - for micro versions)

DEMO Button pressed? (N / Y)

Display shows Fig. 2

DEMO Button pressed? (N / Y)

Display shows Fig. 3

DEMO Button pressed? (N / Y)

Display shows Fig. 4

DEMO Button pressed? (N / Y)

Display shows Fig. 5

DEMO Button pressed? (Y / N)

TUNER TEST

PROGRAM Button pressed? (N / Y)

Display shows Version of Tuner for ccc

Service frequencies are copied to the RAM (see Table1)

Tuner is normal working except for:

PROGRAM and AUTOPROGRAM

Power off? (N / Y)

Service Mode left

QUARTZ TEST

STOP/CLEAR Button pressed? (N / Y)

Display shows 32K Output at pin80 of 7401=2048Hz

STOP/CLEAR Button pressed? (N / Y)

Display shows 8M Output at pin80 of 7401=1953,125Hz

STOP/CLEAR Button pressed? (N / Y)

TAPE TEST

BAND Button pressed? (Y / N)

Display shows 'TAPE'

BAND Button pressed? (N)

PRESET	Europe "EUR"	East Europe "EAS"	USA "USA"	Oversea "OSE"	Korea "KOR"
1	87.5MHz	65.81MHz	87.5MHz	87.5MHz	87.5MHz
2	108MHz	108MHz	108MHz	108MHz	108MHz
3	531kHz	74MHz	530kHz	531/530kHz	531kHz
4	1602kHz	87.5MHz	1700kHz	1602/1700kHz	1602kHz
5	558kHz	531kHz	560kHz	558/560kHz	558kHz
6	1494kHz	1602kHz	1500kHz	1494/1500kHz	1494kHz
7	153kHz	558kHz	98.0MHz	87.5MHz	87.5MHz
8	279kHz	1494kHz	87.5MHz	87.5MHz	87.5MHz
9	198kHz	153kHz	87.5MHz	87.5MHz	87.5MHz
10	98MHz	279kHz	87.5MHz	87.5MHz	98MHz
11	87.5MHz	198kHz	87.5MHz	98MHz	98MHz

Table 1

East Europe Tuner IF offset correction

1) Input a reference frequency 87.5MHz from the generator.
2) Proceed to the Tuner Test mode. (Press PROGRAM button).
3) Offset calibration will start to calibrate automatically. (Display will show XX)

XX : offset value

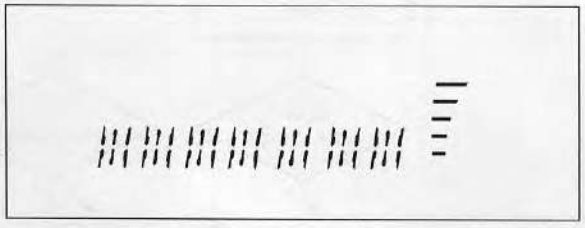

Figure 2

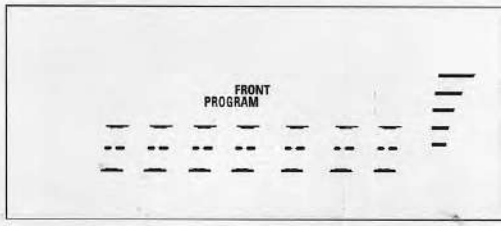

Figure 3

ice Testprogram

ware version number of uP on Front Board
01 upwards)

r model numbers (NOT APPLICABLE IN SERVICE MODE)

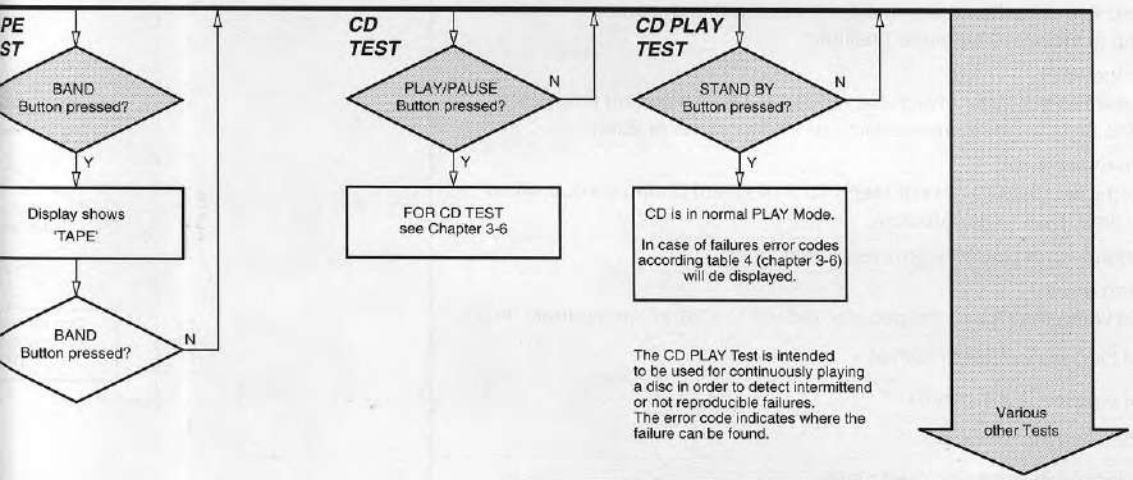

TEST	Activated with	ACTION
		Normal CD play but Errors according table 4 (Chapter 3-6) will be displayed
EEPROM TEST	Tuning Down	A testpattern will be sent to the EEPROM. 'PASS' is displayed. Otherwise ERR will be displayed.
EEPROM CLEAR	Preset Down	Load default data. Display shows NEW for 1 second. ***Caution! All presets from the customer are lost!!***
KEY TEST	Preset Up	Key numbers according table 5 are shown on the display. (see Chapter 3-6)
FAST CLOCK TEST	DBB	The clock is switched to fast mode. 'FAST' is displayed for 2 sec. Press DBB again to reset the clock to normal. 'NOM' displayed for 2 sec.
LEAVE SERVICE TESTPROGRAM	disconnect mains	

rope Tuner IF offset correction
a reference frequency 87.5MHz
the generator.
eed to the Tuner Test mode. (Press
GRAM button).
t calibration will start to calibrate
natically. (Display will show XX)
set value

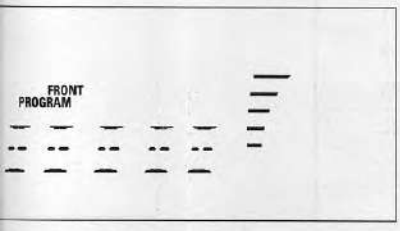

Figure 3

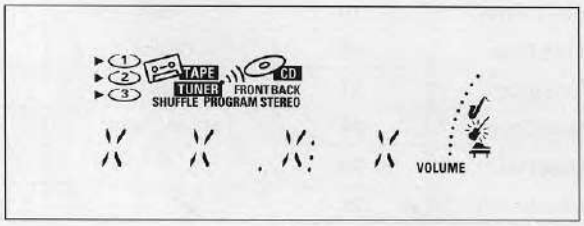

Figure 4

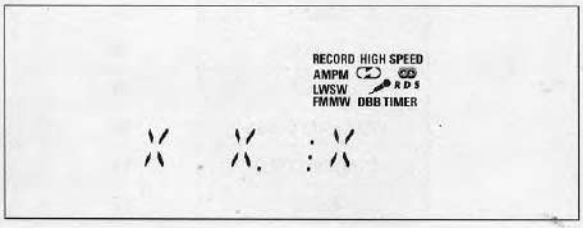

Figure 5

Error number	CD Error description
E 1002	Focus error Triggered when the focus could not found within a certain time when starting up the CD, or when the focus is lost for more than a certain time during playing the CD.
E 1007	Subcode error (no subcode within certain time)
E 1008	TOC error Triggered when during reading the TOC the lead-in(track nr. 0) is left. This can be caused by a misaligned Inner-switch or by a disc with a mispositioned lead-in.
E 1010	Radial error Triggered when the radial servo is not on track for a certain time during playing the CD.
E 1011	Sledge error Generated when the Inner-switch did not open within a certain time when the pickup is moved to the inner position.
E 1012	Fatal sledge error Triggered when the Inner-switch did not close within a certain time when moving the pickup inside. Inner-switch or sledge motor problem.
E 1013	Turnatble motor error Generated when the CD did not reach 75% of speed during startup within a certain time. Disc motor problem.
E 1014	Jump-offtrack error (too less grooves within time)
E 1020	PLL locked error Triggered when the PLL of the decoder did not locked within a certain time.
E 1070	Carousel blocked in a disc position
E 1071	Carousel blocked in the middle
E 1075	Drawer blocked in the middle
E 1076	Drawer blocked in open or closed state

For FW335/FW363

Key activated	Display	Key activated	Display	Key activated	Display
Stop/Clear	01	Clock Set	11	Incredible Sound	21
Program (CD)	02	Timer Set	12	Dbb	22
Shuffle	03	Timer On/Off	13	Optimal	23
Search/Prev	04	Demo	14	Jazz	24
Play/Pause	05	Tuning Down	15	Rock	25
Search/Next	06	Tuning Up	16	Pop	26
CD Open/Close	07	Preset Down	17	Classic	27
Program (TU)	08	Preset Up	18	HSD	28
Band	09	Power/Standby	19	any RC keys	RC
RDS Mode	10	Scroll Source	20		

For FW315C/FW340C/FW345C/FW355C/FW365C/FW373C

Key activated	Display	Key activated	Display	Key activated	Display
Stop/Clear	01	RDS Mode	13	Scroll Source	25
Program (CDC)	02	Clock Set	14	Incredible Stereo	26
Shuffle	03	Timer Set	15	Dbb	27
Search/Prev	04	Timer On/Off	16	Optimal	28
Play/Pause	05	Demo	17	Jazz	29
Search/Next	06	Volume Up	18	Rock	30
Disc 1	07	Volume Down	19	Pop	31
Disc 2	08	Tuning Down	20	Classic	32
Disc 3	09	Tuning Up	21	HSD	33
CD Open Close	10	Preset Down	22	any RC keys	RC
Program (TU)	11	Preset Up	23		
Band	12	Power/Standby	24		

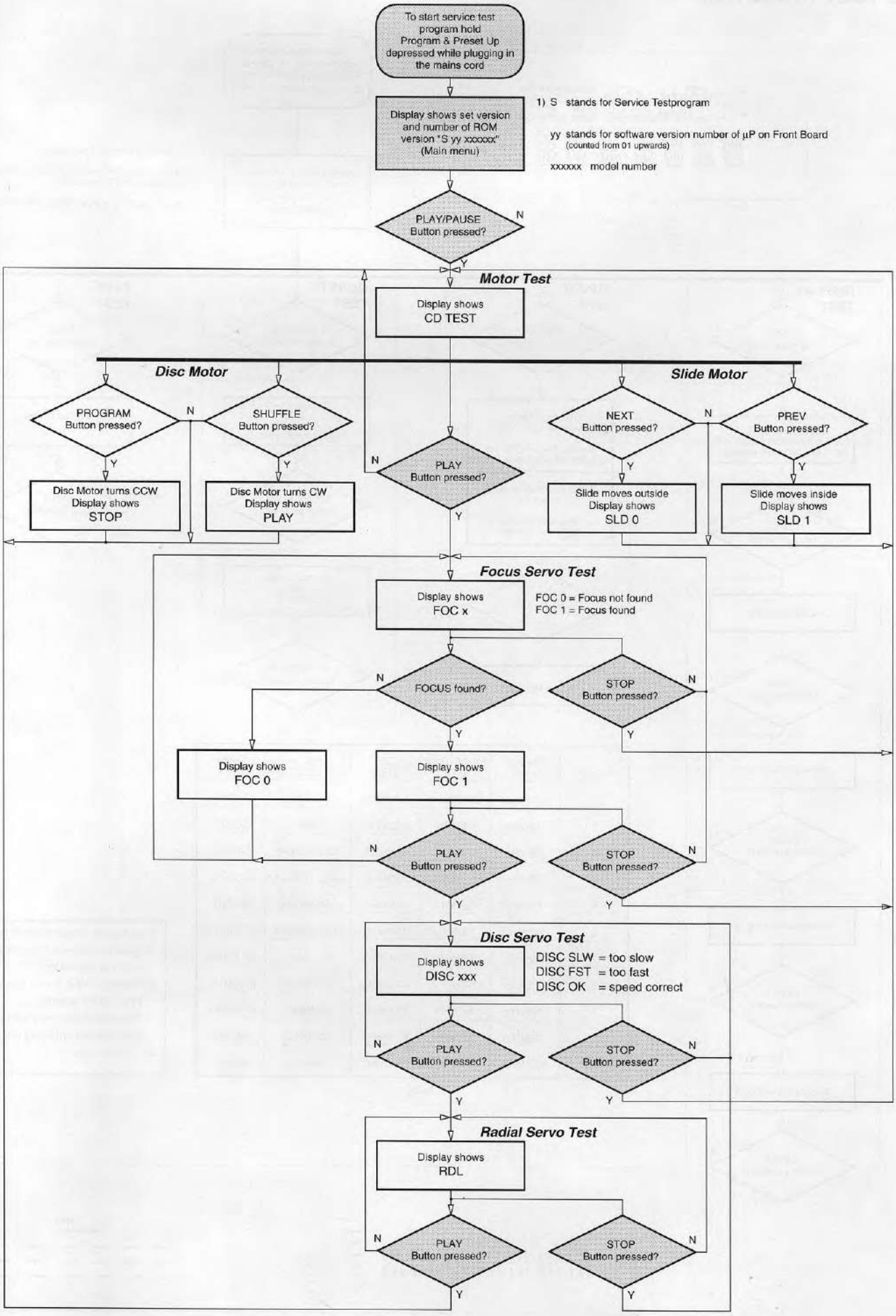
To start service test program hold Program & Preset Up depressed while plugging in the mains cord
Display shows set version and number of ROM version "S yy xxxxxx" (Main menu)
1) S stands for Service Testprogram
yy stands for software version number of µP on Front Board (counted from 01 upwards)
xxxxxx model number
PLAY/PAUSE Button pressed?
N
Y
Motor Test
Display shows CD TEST
Disc Motor
Slide Motor
PROGRAM Button pressed?
SHUFFLE Button pressed?
NEXT Button pressed?
PREV Button pressed?
PLAY Button pressed?
Disc Motor turns CCW Display shows STOP
Disc Motor turns CW Display shows PLAY
Slide moves outside Display shows SLD 0
Slide moves inside Display shows SLD 1
Focus Servo Test
Display shows FOC x
FOC 0 = Focus not found
FOC 1 = Focus found
FOCUS found?
STOP Button pressed?
Display shows FOC 0
Display shows FOC 1
Disc Servo Test
Display shows DISC xxx
DISC SLW = too slow
DISC FST = too fast
DISC OK = speed correct
Radial Servo Test
Display shows RDL

BLOCK DIAGRAM

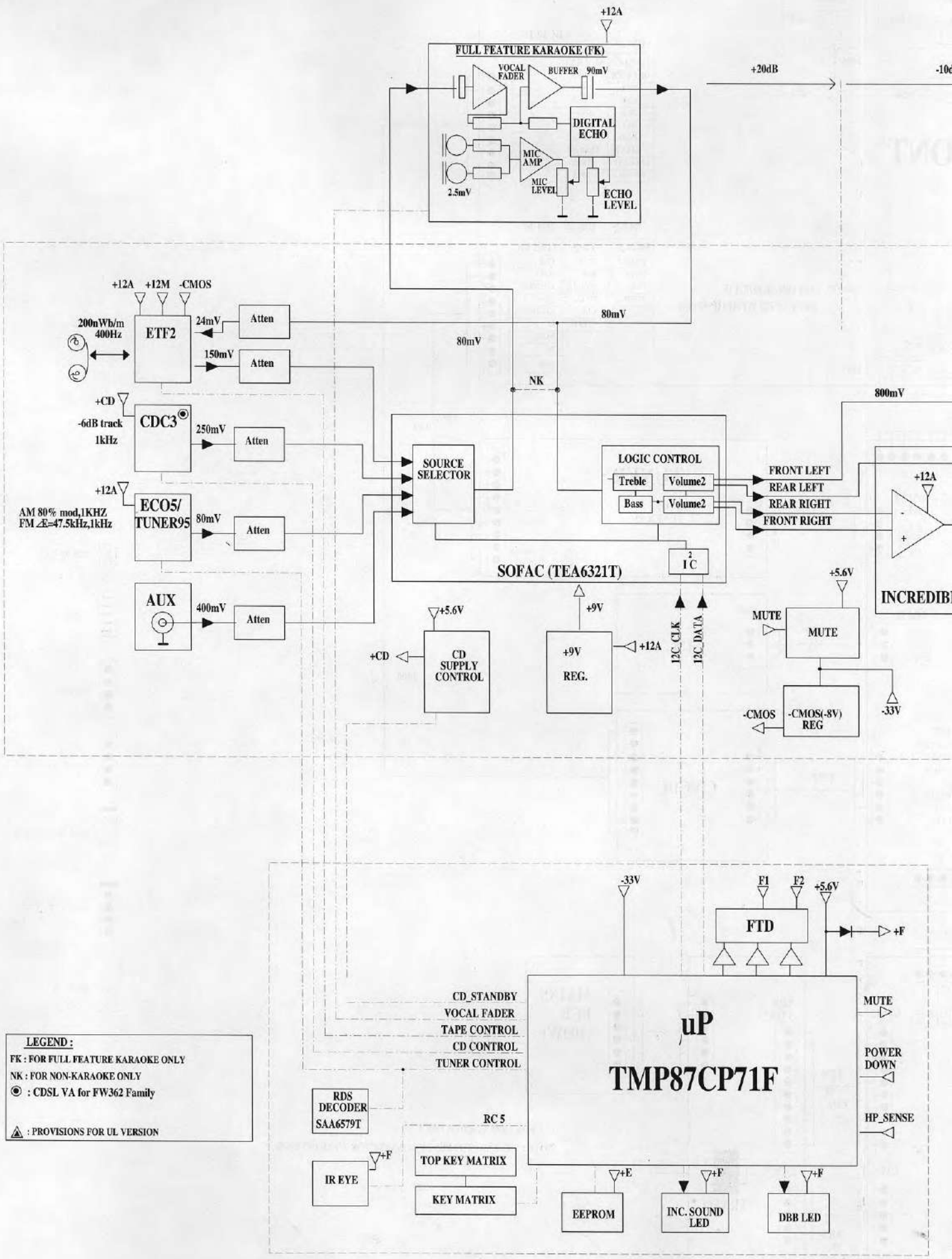

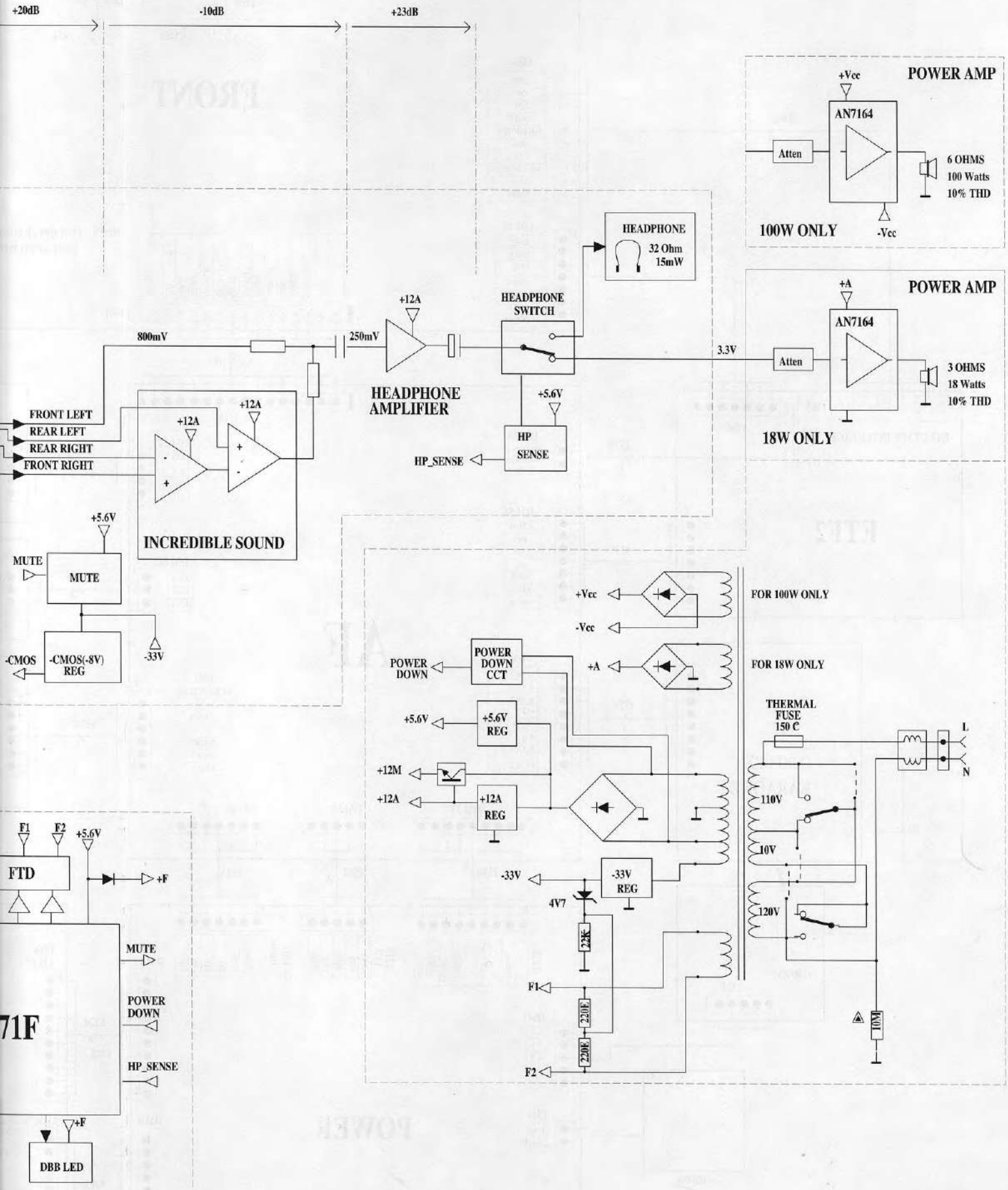
+20dB
-10dB
+23dB
POWER AMP
+Vcc
AN7164
Atten
6 OHMS
100 Watts
10% THD
100W ONLY
-Vcc
HEADPHONE
32 Ohm
15mW
POWER AMP
+A
AN7164
Atten
3 OHMS
18 Watts
10% THD
18W ONLY
+12A
HEADPHONE SWITCH
800mV
250mV
3.3V
HEADPHONE AMPLIFIER
+5.6V
HP SENSE
HP_SENSE
FRONT LEFT
REAR LEFT
REAR RIGHT
FRONT RIGHT
+12A
+12A
INCREDIBLE SOUND
+5.6V
MUTE
MUTE
-CMOS
-CMOS(-8V) REG
-33V
+Vcc
-Vcc
FOR 100W ONLY
POWER DOWN
POWER DOWN CCT
+A
FOR 18W ONLY
+5.6V
+5.6V REG
THERMAL FUSE 150 C
L
N
+12M
+12A
+12A REG
110V
10V
120V
-33V
-33V REG
4V7
22K
F1
220E
220E
F2
10M
F1
F2
+5.6V
FTD
+F
MUTE
POWER DOWN
HP_SENSE
71F
+F
DBB LED

WIRING DIAGRAM

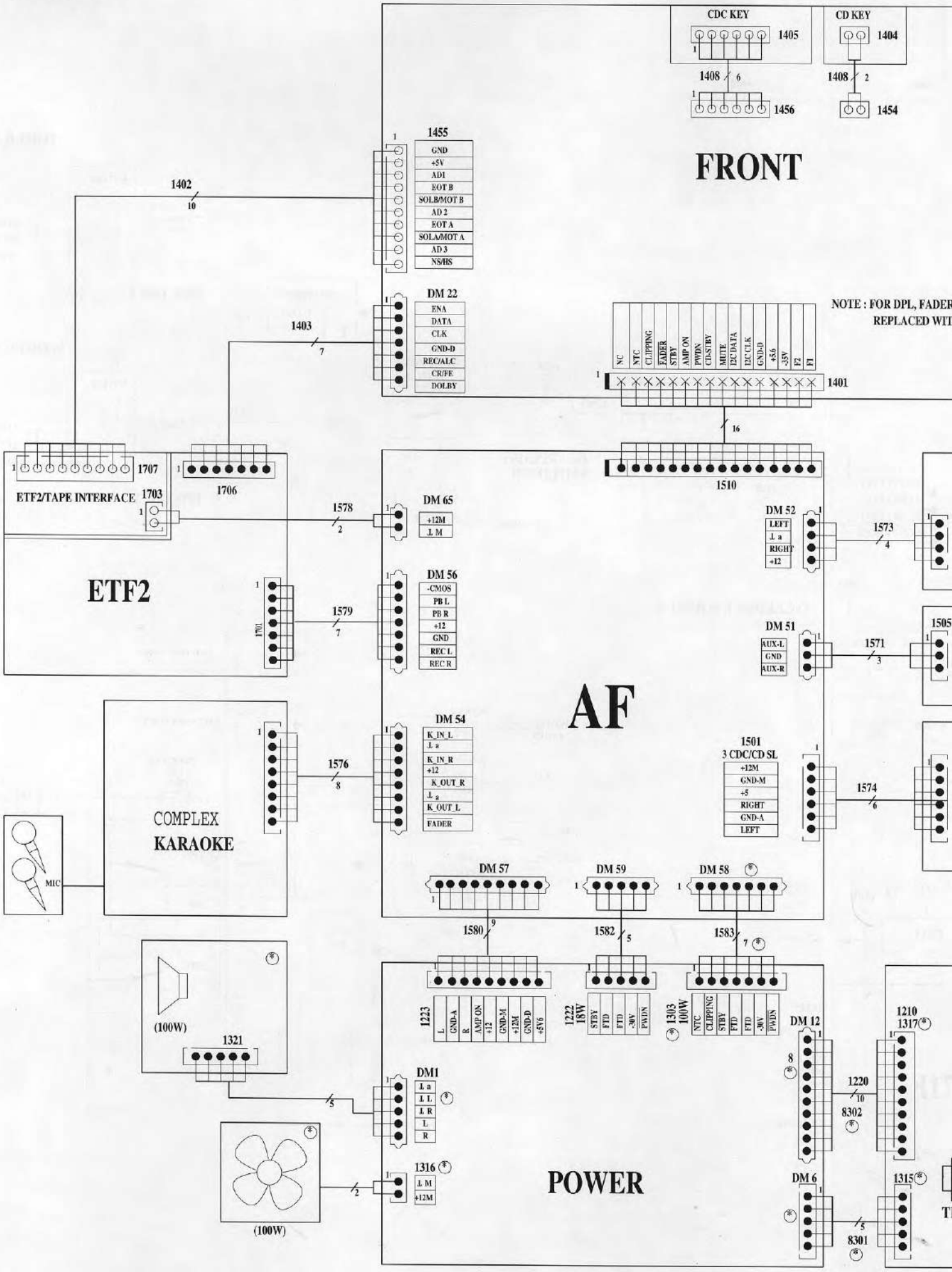

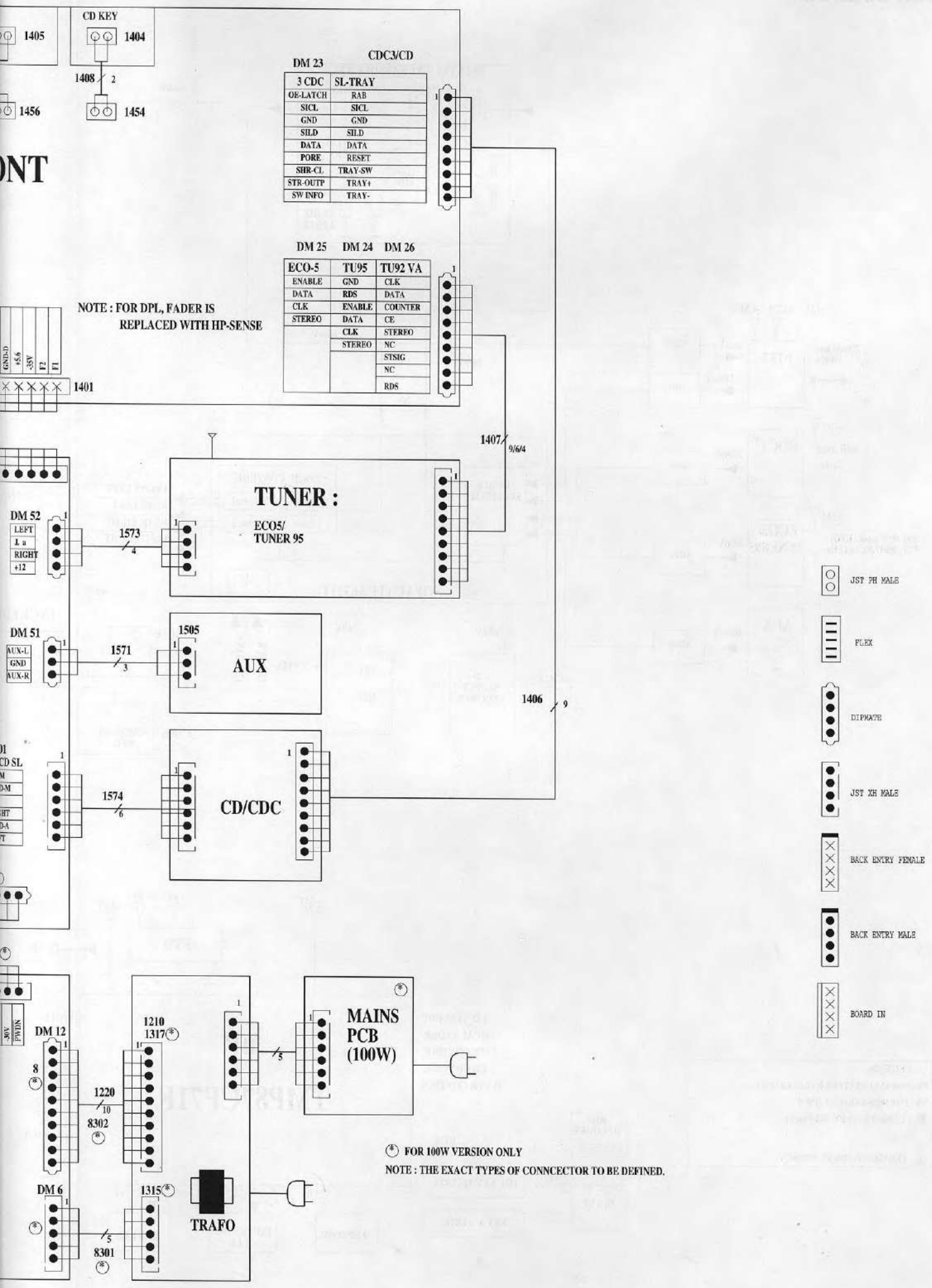

(*) FOR 100W VERSION ONLY

NOTE : THE EXACT TYPES OF CONNCECTOR TO BE DEFINED.

FRONT BOARD

TABLE OF CONTENTS

22 C 4	1416 D 6	1428 C 3	1456 A 1	2441 C 2	3451 B 3	3594 C 4	6414 B 3	6446 B 3	6458 B 5	9409
23 B 7	1417 B 5	1429 C 4	1458 B 7	2453 C 1	3452 B 3	3595 C 3	6415 B 3	6447 B 3	7403 C 2	9410
24 C 1	1418 B 5	1430 C 4	1460 D 3	2454 B 1	3453 B 3	5401 B 4	6416 C 4	6448 B 4	7428 C 1	9411
1400 B 3	1419 B 2	1431 D 5	1461 D 2	2459 B 7	3454 B 3	5402 C 6	6417 C 6	6449 B 4	9400 B 7	9412
1401 D 5	1420 B 2	1432 D 4	2401 C 4	3403 B 4	3479 D 5	5403 C 2	6418 C 6	6450 B 3	9401 D 4	9413
1404 A 1	1421 D 2	1433 D 5	2402 C 5	3404 B 4	3513 D 5	5406 C 5	6419 C 7	6451 B 3	9402 D 4	9415
1405 A 1	1422 D 2	1441 A 7	2403 C 2	3437 C 7	3527 D 6	5407 C 2	6420 C 7	6452 B 3	9403 C 4	9416
1411 C 7	1423 D 1	1442 A 6	2425 A 1	3445 B 2	3542 D 3	5410 C 6	6421 A 6	6453 B 3	9404 D 6	9417
1412 D 7	1424 B 1	1443 A 7	2426 A 5	3446 C 3	3545 D 3	6401 D 4	6422 A 6	6454 B 3	9405 C 6	9418
1413 C 6	1425 D 3	1444 A 6	2438 B 7	3447 C 3	3580 D 6	6402 C 3	6423 A 7	6455 B 5	9406 C 7	9419
1414 D 6	1426 D 3	1454 A 1	2439 D 2	3448 C 3	3591 B 1	6412 C 5	6425 D 4	6456 B 5	9407 C 6	9420
1415 B 6	1427 C 2	1455 D 3	2440 D 3	3450 B 3	3592 A 5	6413 B 3	6445 B 3	6457 B 5	9408 C 6	9421

1 2 3 4

fw372/fr2panel-p1-961002
3139 113 33581

COMPONENT LAYOUT COMPONENTSIDE

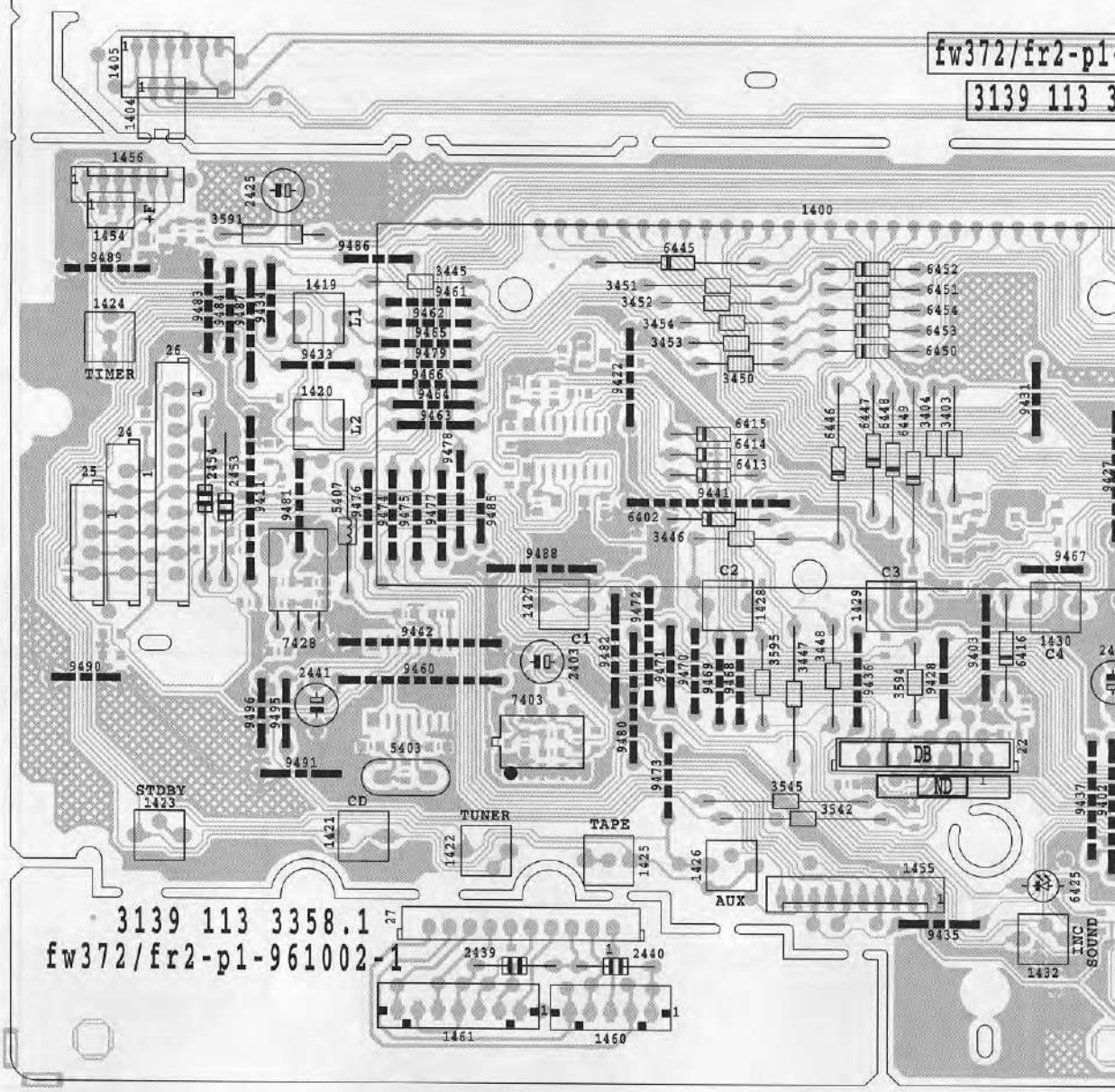

A B C D

1 2 3 4

6446 B 3	6458 B 5	9409 D 6	9422 B 3	9435 D 4	9447 B 6	9459 B 6	9471 C 3	9483 B 1	9495 C 1
6447 B 3	7403 C 2	9410 D 6	9423 B 5	9436 C 3	9448 B 6	9460 C 2	9472 C 3	9484 B 1	9496 C 1
6448 B 4	7428 C 1	9411 B 1	9424 B 7	9437 D 4	9449 B 6	9461 B 2	9473 C 3	9485 C 2	9538 B 7
6449 B 4	9400 B 7	9412 D 5	9425 B 4	9438 D 5	9450 B 7	9462 B 2	9474 C 2	9486 B 2	9539 D 6
6450 B 3	9401 D 4	9413 C 5	9426 D 5	9439 B 5	9451 D 6	9463 B 2	9475 C 2	9487 B 1	9559 B 7
6451 B 3	9402 D 4	9415 B 5	9427 B 4	9440 B 4	9452 D 6	9464 B 2	9476 C 2	9488 C 2	----
6452 B 3	9403 C 4	9416 B 5	9428 C 4	9441 B 3	9453 D 6	9465 B 2	9477 C 2	9489 B 1	
6453 B 3	9404 D 6	9417 D 5	9430 B 4	9442 C 2	9454 D 6	9466 B 2	9478 B 2	9490 C 1	
6454 B 3	9405 C 6	9418 D 5	9431 B 4	9443 B 6	9455 B 7	9467 C 4	9479 B 2	9491 C 1	
6455 B 5	9406 C 7	9419 C 7	9432 D 6	9444 B 6	9456 C 7	9468 C 3	9480 C 3	9492 B 5	
6456 B 5	9407 C 6	9420 B 6	9433 B 2	9445 B 6	9457 C 6	9469 C 3	9481 C 1	9493 B 7	
6457 B 5	9408 C 6	9421 B 6	9434 B 1	9446 B 6	9458 C 7	9470 C 3	9482 C 3	9494 B 7	

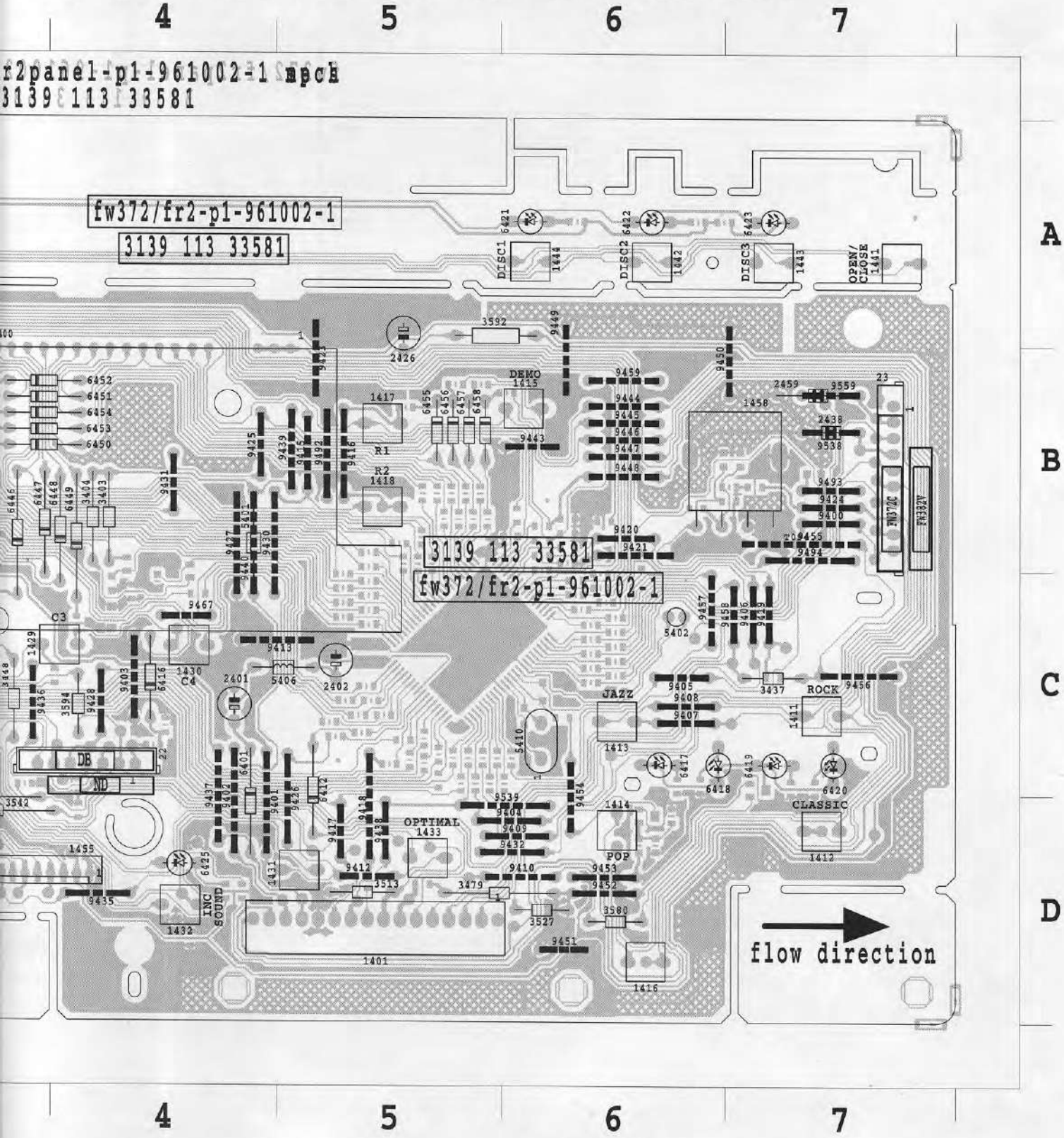

FRONT CIRCUIT

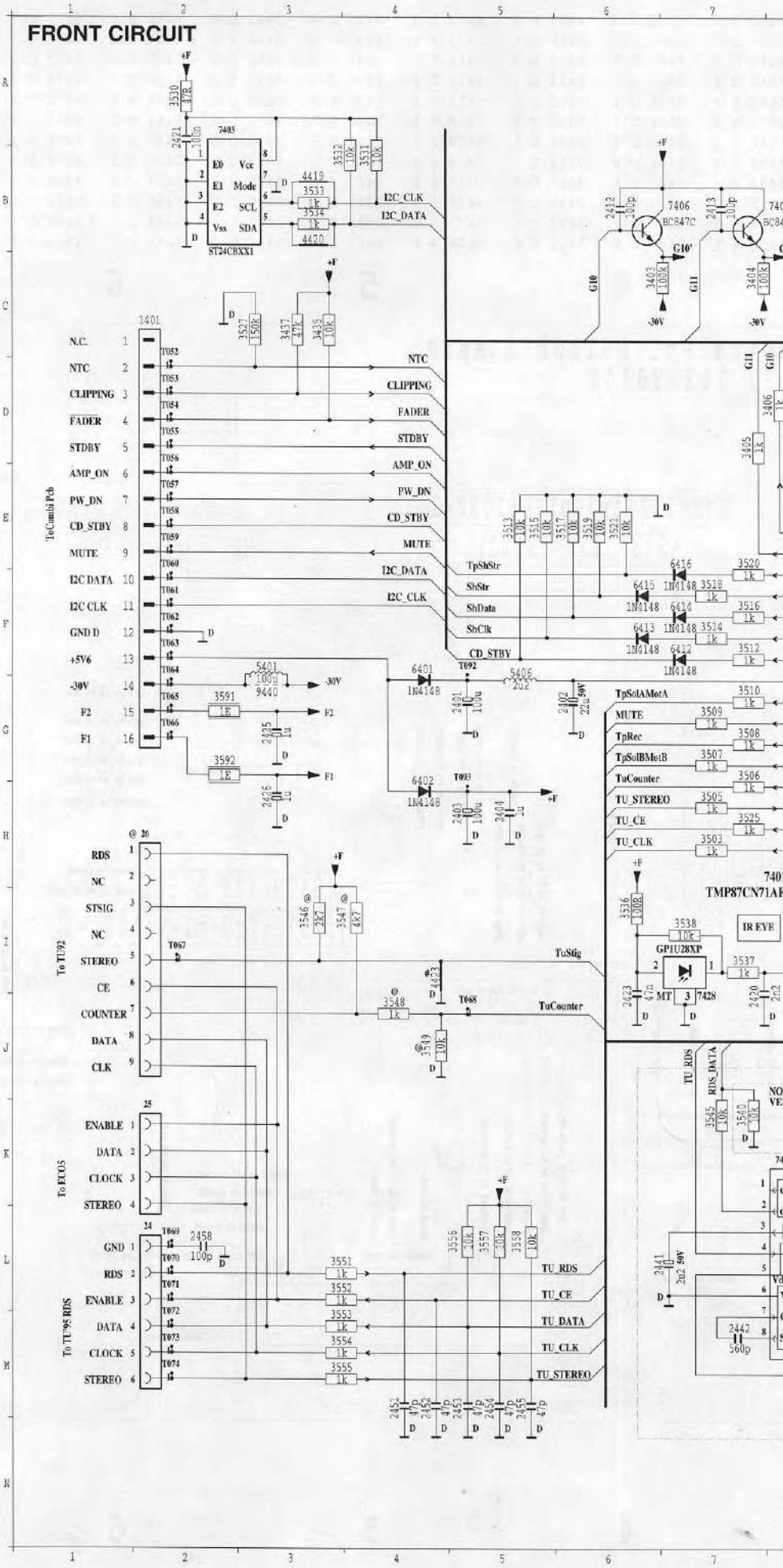

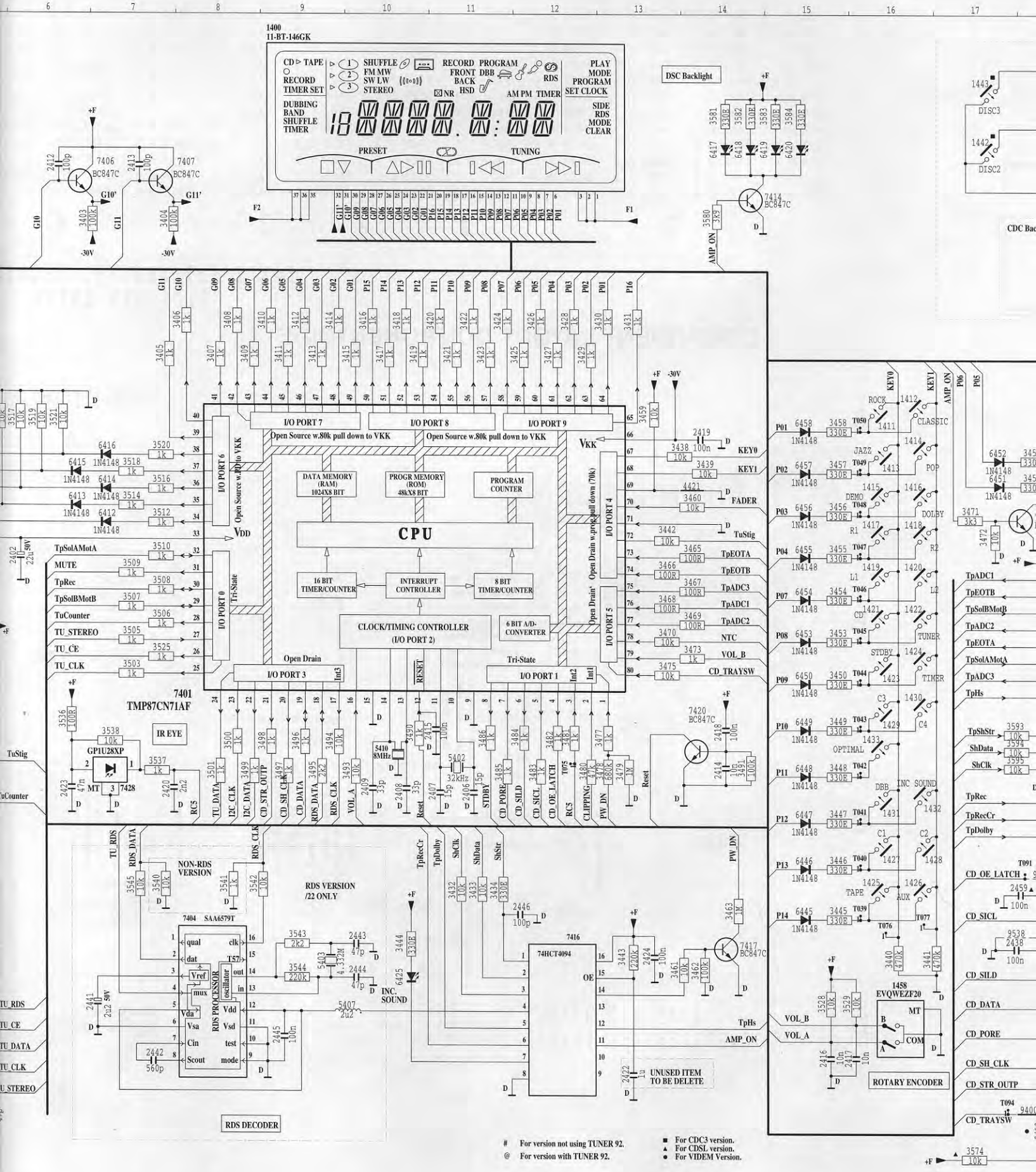
1400
11-BT-146GK
CD TAPE
RECORD
TIMER SET
DUBBING
BAND
SHUFFLE
TIMER
SHUFFLE
FM MW
SW LW
STEREO
RECORD
FRONT
BACK
HSD
PROGRAM
DBB
NR
RDS
AM PM
TIMER
PLAY
MODE
PROGRAM
SET CLOCK
SIDE
RDS
MODE
CLEAR
PRESET
TUNING
DSC Backlight
CDC Bac
DISC3
DISC2
7406
BC847C
7407
BC847C
7414
BC847C
AMP_ON
I/O PORT 7
I/O PORT 8
I/O PORT 9
Open Source w.80k pull down to VKK
VKK
DATA MEMORY
(RAM)
1024X8 BIT
PROGR MEMORY
(ROM)
48KX8 BIT
PROGRAM
COUNTER
CPU
16 BIT
TIMER/COUNTER
INTERRUPT
CONTROLLER
8 BIT
TIMER/COUNTER
CLOCK/TIMING CONTROLLER
(I/O PORT 2)
6 BIT A/D-
CONVERTER
I/O PORT 6
I/O PORT 0
Tri-State
I/O PORT 4
I/O PORT 5
Open Drain w.prog.pull down (70k)
Open Drain
I/O PORT 3
I/O PORT 1
Int3
Int2
Int1
RESET
VDD
7401
TMP87CN71AF
IR EYE
GP1U28XP
7428
KEY0
KEY1
FADER
TuStig
TpEOTA
TpEOTB
TpADC3
TpADC1
TpADC2
NTC
VOL_B
CD_TRAYSW
TpSolAMotA
MUTE
TpRec
TpSolBMotB
TuCounter
TU_STEREO
TU_CE
TU_CLK
TU_DATA
I2C_CLK
I2C_DATA
CD_STR_OUTP
CD_SH_CLK
CD_DATA
RDS_DATA
RDS_CLK
VOL_A
CD_SILD
CD_SICL
CD_OE_LATCH
RC5
CLIPPING
PW_DN
STDBY
CD_PORE
5410
8MHz
32kHz
7420
BC847C
ROCK
CLASSIC
JAZZ
POP
DEMO
DOLBY
R1
R2
L1
L2
CD
TUNER
STDBY
TIMER
C3
C4
OPTIMAL
DBB
INC
SOUND
C1
C2
TAPE
AUX
1458
EVQWEZF20
ROTARY ENCODER
NON-RDS
VERSION
RDS VERSION
/22 ONLY
7404 SAA6579T
RDS PROCESSOR
qual
dat
Vref
mux
Vda
Vsa
Cin
Scout
clk
T57
out
in
oscillator
Vdd
Vsd
test
mode
INC.
SOUND
7416
74HCT4094
OE
7417
BC847C
TpRecCr
TpDolby
ShClk
ShData
ShStr
TpHs
AMP_ON
VOL_B
VOL_A
UNUSED ITEM
TO BE DELETE
RDS DECODER
CD_OE_LATCH
CD_SICL
CD_SILD
CD_DATA
CD_PORE
CD_SH_CLK
CD_STR_OUTP
CD_TRAYSW
For version not using TUNER 92.
@ For version with TUNER 92.
■ For CDC3 version.
▲ For CDSL version.
● For VIDEM Version.

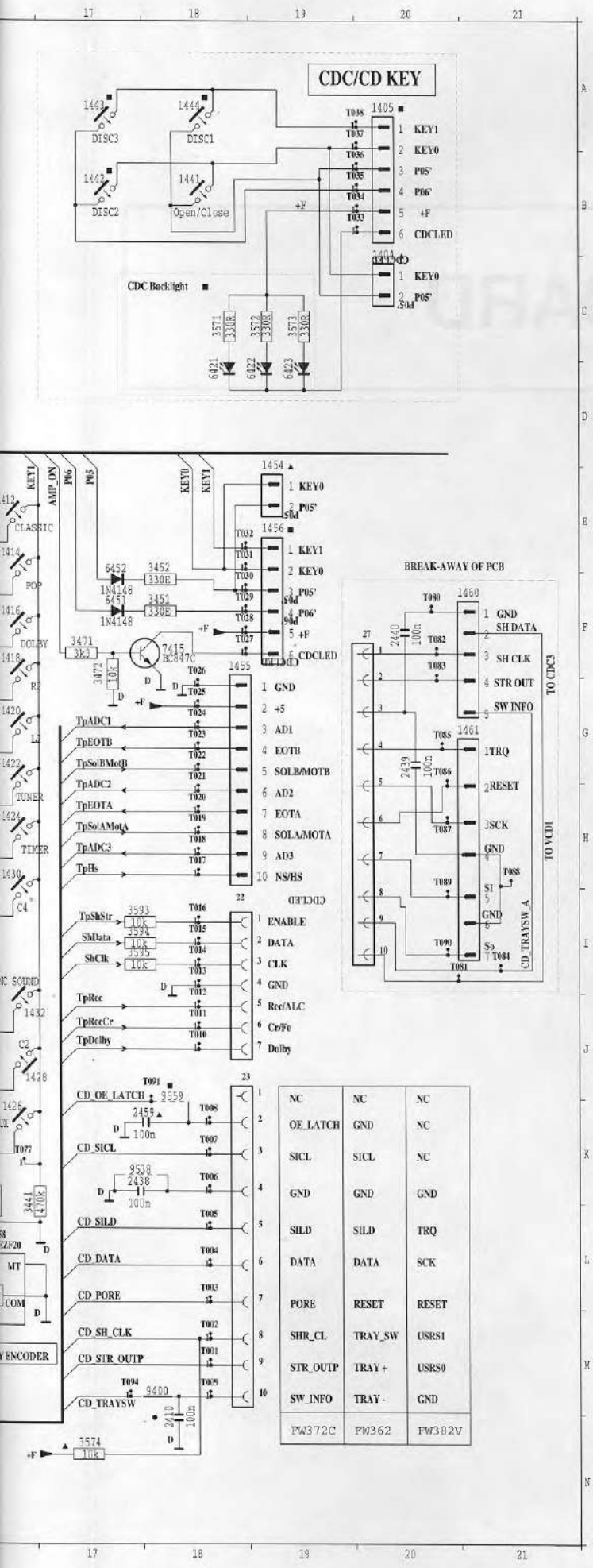

	1400	A 9	3478 I13
	1401	C 2	3479 I13
	1404	C20	3480 I12
	1405	A20	3481 I12
	1411	E16	3482 I12
	1412	F16	3483 I12
A	1413	F16	3484 I12
	1414	E16	3485 I11
	1415	F16	3486 I11
	1416	F16	3490 I10
	1417	F16	3491 I14
	1418	F16	3493 I10
	1419	G16	3494 I 9
	1420	G16	3495 I 9
	1421	G16	3496 I 9
	1422	G16	3497 I 9
	1423	H16	3498 I 9
	1424	H16	3499 I 8
B	1425	K16	3500 I 8
	1426	K16	3501 I 8
	1427	J16	3503 H 7
	1428	J16	3505 H 7
	1429	I16	3506 G 7
	1430	H16	3507 G 7
	1431	J16	3508 G 7
	1432	J16	3509 G 7
	1433	I16	3510 G 7
	1441	B18	3512 F 7
	1442	B17	3513 B 5
C	1443	A17	3514 F 7
	1444	A18	3515 B 5
	1454	E19	3516 F 7
	1455	F19	3517 B 6
	1456	E19	3518 F 7
	1458	I16	3519 B 6
	1460	F20	3520 B 7
	1461	G20	3521 B 6
	22	I18	3525 H 7
	23	J18	3527 C 3
D	24	L 2	3528 L15
	2401	G 5	3529 L15
	2402	G 5	3530 A 2
	2403	E 5	3531 B 4
	2404	H 5	3532 B 3
	2406	J11	3533 B 3
	2407	J11	3534 B 3
	2408	J10	3536 I 6
	2409	I10	3537 I 7
	2410	N18	3538 I 7
	2412	B 6	3540 K 7
E	2413	E 7	3541 K 8
	2414	I14	3542 K 8
	2415	I11	3543 E 9
	2416	M15	3544 L 9
	2417	M15	3545 E 7
	2418	I14	3546 I 3
	2419	E14	3547 I 3
	2420	I 7	3548 J 4
	2421	A 2	3549 I 3
	2422	M13	3551 L 3
	2423	I 6	3552 L 3
F	2424	K13	3553 M 3
	2425	G 3	3554 M 3
	2426	H 3	3555 M 3
	2438	K17	3556 L 4
	2439	G20	3557 L 5
	2440	F20	3558 L 5
	2441	C 7	3561 C19
	2442	M 7	3572 C19
	2443	K10	3573 C19
	2444	L10	3574 N17
G	2445	C 9	3580 C14
	2446	K12	3581 A14
	2451	M 4	3582 A14
	2452	M 4	3583 A14
	2453	M 5	3584 A15
	2454	M 5	3591 G 2
	2455	M 5	3592 G 2
	2458	L 2	3593 I17
	2459	K18	3594 I17
	25	K 2	3595 I17
	26	H 2	4419 B 3
H	27	F20	4420 B 3
	3403	C 6	4421 P14
	3404	C 7	4423 I 4
	3405	D 7	5401 F 3
	3406	D 8	5402 I11
	3407	D 8	5403 L 9
	3408	D 8	5406 F 5
	3409	D 8	5407 L10
	3410	D 9	5410 I10
	3411	D 9	6401 F 4
I	3412	D 9	6402 H 4
	3413	D 9	6412 F 7
	3414	D 9	6413 F 6
	3415	D10	6414 F 7
	3416	D10	6415 F 6
	3417	D10	6416 E 7
	3418	D10	6417 B14
	3419	D10	6418 B14
	3420	D11	6419 B14
	3421	D11	6420 B15
	3422	D11	6421 D18
J	3423	D11	6422 D18
	3424	D11	6423 D18
	3425	D12	6425 L10
	3426	D12	6445 K15
	3427	D12	6446 J15
	3428	D12	6447 J15
	3429	D12	6448 I15
	3430	D13	6449 I15
	3431	D13	6450 H15
	3432	K11	6451 F17
	3433	K11	6452 F17
K	3434	K11	6453 H15
	3435	C 3	6454 G15
	3437	C 3	6455 G15
	3438	E13	6456 F15
	3439	F14	6457 F15
	3440	K16	6458 E15
	3441	K16	7401 B 8
	3442	F13	7403 A 2
	3443	K13	7404 X 8
	3444	K10	7406 B 7
	3445	K15	7407 B 8
L	3446	J15	7414 B14
	3447	J15	7415 F18
	3448	I15	7416 K12
	3449	I15	7417 K14
	3450	H15	7420 I14
	3451	F18	7428 J 7
	3452	E18	9400 M18
	3453	H15	9440 G 3
	3454	G15	9538 K17
	3455	G15	9559 K18
M	3456	F15	
	3457	F15	
	3458	E15	
	3459	F13	
	3460	F14	
	3461	I13	
	3462	L14	
	3463	K14	
	3465	G14	
	3466	G13	
	3467	G14	
	3468	G13	
N	3469	G12	
	3470	H13	
	3471	F17	
	3472	F17	
	3473	H14	
	3475	H13	
	3477	I13	

2404 C 4	2416 B 6	2443 C 2	3407 C 5	3417 B 5	3427 B 5	3439 B 6	3458 B 6	3469 C 6	3482 C 6	3496 C 5
2406 C 6	2417 B 7	2444 C 2	3408 C 5	3418 B 5	3428 B 5	3440 B 6	3459 B 6	3470 C 6	3483 C 6	3497 C 5
2407 C 6	2418 D 6	2445 C 2	3409 C 5	3419 B 5	3429 B 5	3441 B 6	3460 B 6	3471 B 1	3484 C 6	3498 C 5
2408 C 6	2419 B 6	2446 B 2	3410 C 5	3420 B 5	3430 B 5	3442 C 6	3461 B 2	3472 B 1	3485 C 6	3499 C 5
2409 C 6	2420 C 2	2451 C 1	3411 C 5	3421 B 5	3431 B 6	3443 B 2	3462 B 2	3473 C 6	3486 C 6	3500 C 5
2410 B 7	2421 C 2	2452 B 1	3412 C 5	3422 B 5	3432 B 2	3444 D 4	3463 B 3	3475 C 6	3490 C 6	3501 C 5
2412 C 4	2422 B 2	2455 C 1	3413 C 5	3423 B 5	3433 B 2	3449 C 4	3465 C 6	3477 C 6	3491 D 6	3503 C 5
2413 C 4	2423 C 2	2458 B 1	3414 C 5	3424 B 5	3434 B 2	3455 B 5	3466 C 6	3478 D 5	3493 C 6	3505 C 5
2414 D 6	2424 B 3	3405 C 5	3415 B 5	3425 B 5	3435 C 7	3456 B 5	3467 C 6	3480 C 6	3494 C 6	3506 C 5
2415 C 6	2442 C 2	3406 C 5	3416 B 5	3426 B 5	3438 B 6	3457 B 5	3468 C 6	3481 C 6	3495 C 5	3507 C 5

COMPONENT LAYOUT COMPONENTSIDE

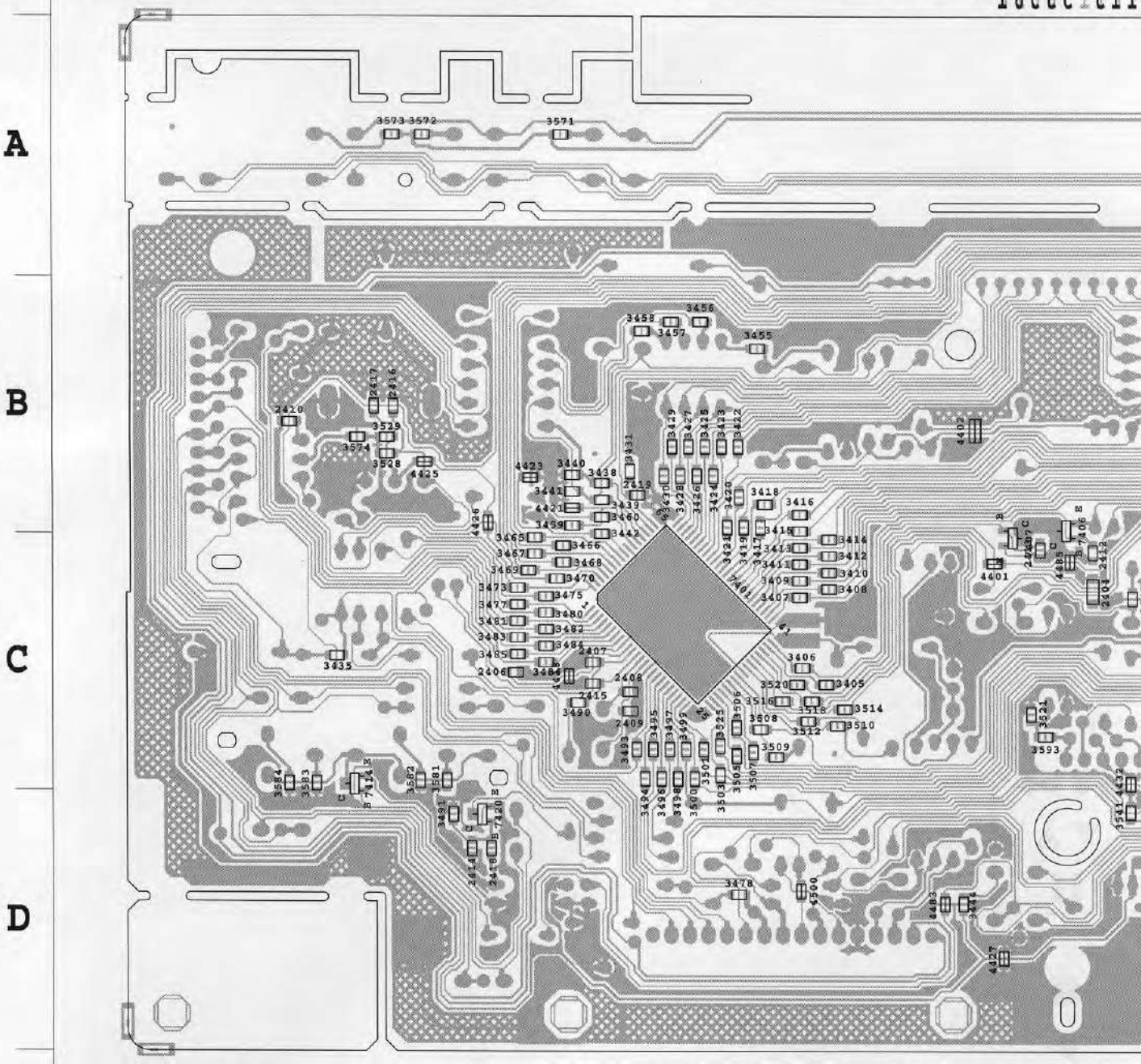

3469 C 6	3482 C 6	3496 C 5	3508 C 5	3520 C 5	3536 C 1	3549 B 1	3572 A 6	4418 C 6	4430 B 1	7401 C 5
3470 C 6	3483 C 6	3497 C 5	3509 C 5	3521 C 4	3537 C 1	3551 C 1	3573 A 6	4419 C 2	4431 C 4	7404 C 2
3471 B 1	3484 C 6	3498 C 5	3510 C 5	3525 C 5	3538 C 1	3552 B 1	3574 B 7	4420 C 3	4432 C 4	7406 B 4
3472 B 1	3485 C 6	3499 C 5	3512 C 5	3528 B 7	3540 C 3	3553 C 1	3581 C 6	4421 B 6	4483 D 4	7407 C 4
3473 C 6	3486 C 6	3500 C 5	3514 C 5	3529 B 7	3541 D 4	3554 C 1	3582 C 6	4422 C 1	4484 D 2	7414 C 7
3475 C 6	3490 C 6	3501 C 5	3515 B 3	3530 C 2	3543 C 2	3555 C 1	3583 C 7	4423 B 6	4485 C 4	7415 B 1
3477 C 6	3491 D 6	3503 C 5	3516 C 5	3531 C 2	3544 C 2	3556 C 1	3584 C 7	4424 C 3	4486 C 3	7416 B 2
3478 D 5	3493 C 6	3505 C 5	3517 B 3	3532 C 2	3546 B 1	3557 C 1	3593 C 4	4425 B 6	4487 B 2	7417 B 3
3480 C 6	3494 C 6	3506 C 5	3518 C 5	3533 C 2	3547 B 1	3558 C 1	4401 C 4	4426 B 6	4488 B 1	7420 D 6
3481 C 6	3495 C 5	3507 C 5	3519 B 3	3534 C 3	3548 B 1	3571 A 6	4402 B 4	4427 D 4	4500 D 5	----

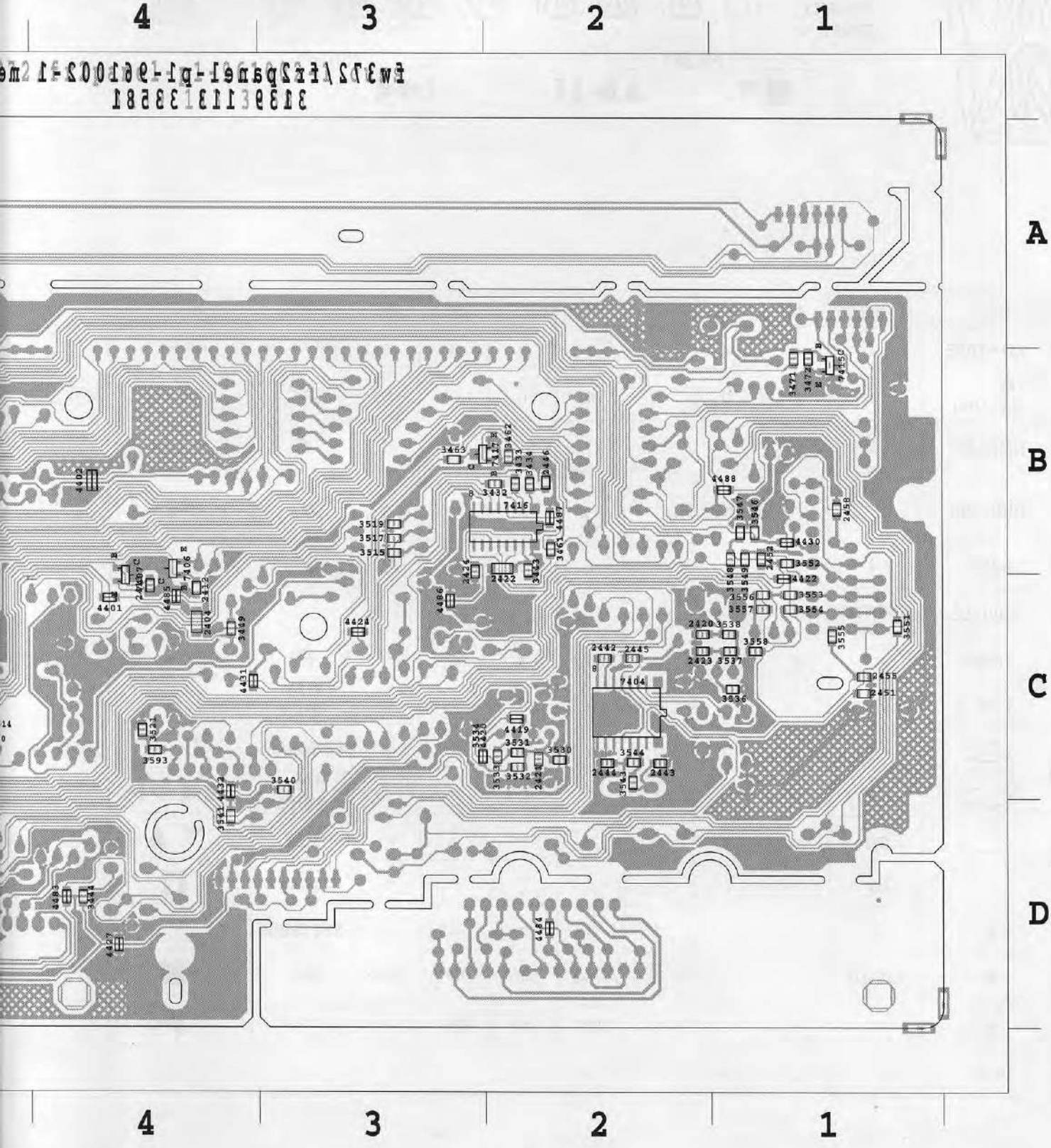

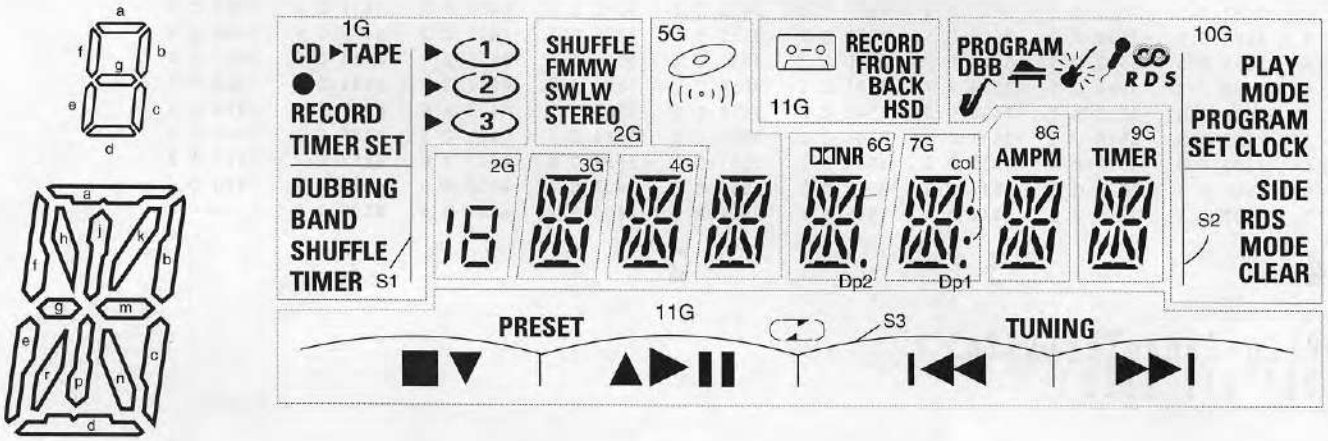

	1G	2G	3G	4G	5G	6G	7G	8G	9G	10G	11G
P1	CD ▶TAPE	a	a	a	a	a	a	a	a	PROGRAM	FRONT
P2	● RECORD	b	b	b	b	b	b	b	b	RDS	BACK
P3	TIMER SET	f	f	f	f	f	f	f	f		RECORD
P4	DUBBING		h	h	h	h	h	h	h		HSD
P5	BAND	FM	k	k	k	k	k	k	k		PRESET TUNING
P6	SHUFFLE	SHUFFLE	j , p	j , p	j , p	j , p	j , p	j , p	j , p		
P7	TIMER	g	g	g	g	g	g	g	g		
P8	1 2 3	MW	m	m	m	m	m	m	m	PLAY MODE	
P9		e	e	e	e	e	e	e	e	PROGRAM	❙ ❙
P10		c	c	c	c	c	c	c	c	RDS MODE	◀◀ ▶▶
P11		SW	n	n	n	n	n	n	n	SIDE	▼ ▲
P12		LW	r	r	r	r	r	r	r	CLEAR	❙❙
P13	▶	d	d	d	d	d	d	d	d	SET CLOCK	
P14	▶	STEREO	-	-		. Dp2	Dp1	AM	TIMER	DBB	■
P15	▶	-	-	-		DDNR	col	PM	-	-	▶
P16	S1	-	-	-	-	-	-	-	-	S2	S3

FRONT BOARD PARTSLIST

MISCELLANEOUS

17	4822 256 10206	Holder Led
18	4822 466 10972	Light Guide CDC
1400	4822 135 00033	Display Fluorescent
1401	4822 267 51238	Connector
1411	4822 276 13114	Tact switch
1412	4822 276 13114	Tact switch
1413	4822 276 13114	Tact switch
1414	4822 276 13114	Tact switch
1415	4822 276 13114	Tact switch
1416	4822 276 13114	Tact switch
1417	4822 276 13114	Tact switch
1418	4822 276 13114	Tact switch
1419	4822 276 13114	Tact switch
1420	4822 276 13114	Tact switch
1421	4822 276 13114	Tact switch
1422	4822 276 13114	Tact switch
1423	4822 276 13114	Tact switch
1424	4822 276 13114	Tact switch
1425	4822 276 13114	Tact switch
1426	4822 276 13114	Tact switch
1427	4822 276 13114	Tact switch
1428	4822 276 13114	Tact switch
1429	4822 276 13114	Tact switch
1430	4822 276 13114	Tact switch
1431	4822 276 13114	Tact switch
1432	4822 276 13114	Tact switch
1433	4822 276 13114	Tact switch
1441	4822 276 13114	Tact switch
1442	4822 276 13114	Tact switch (FW373C)
1443	4822 276 13114	Tact switch (FW373C)
1444	4822 276 13114	Tact switch (FW373C)
1458	4822 101 90254	Variable resistors

CAPACITORS

2401	4822 124 41584	100µF 20% 10V
2402	4822 124 41596	22µF 20% 50V
2403	4822 124 41584	100µF 20% 10V
2404	4822 126 11692	1µF
2406	5322 122 32481	15PF 5% 50V
2407	5322 122 32481	15PF 5% 50V
2408	5322 122 32659	33PF 5% 50V
2409	5322 122 32659	33PF 5% 50V
2412	5322 122 32531	100PF 5% 50V
2413	5322 122 32531	100PF 5% 50V

CAPACITORS

2414	4822 122 33177	10nF 20% 50V
2415	4822 126 12882	100nF+80-20% 50V
2416	4822 122 33177	10nF 20% 50V
2417	4822 122 33177	10nF 20% 50V
2418	4822 126 13838	100nF 20% 50V
2419	4822 126 13838	100nF 20% 50V
2420	4822 122 33175	2.2nF 20% 50V
2421	4822 126 13838	100nF 20% 50V
2422	4822 126 11692	1µF 20% 16V
2423	4822 122 33797	47nF 20% 50V
2424	4822 126 13838	100nF 20% 50V
2425	4822 124 40242	1µF 20% 63V
2426	4822 124 40242	1µF 20% 63V
2438	4822 126 12882	100nF+80-20% 50V
2441	4822 124 41576	2.2µF 20% 50V
2442	4822 122 33173	560PF 10% 50V(Not for -/21)
2443	5322 122 32452	47PF 5% 63V(Not for -/21)
2444	5322 122 32452	47PF 5% 63V(Not for -/21)
2445	4822 126 13838	100nF 20% 50V(Not for -/21)
2446	5322 122 32531	100PF 5% 50V
2451	5322 122 32452	47PF 5% 63V
2452	5322 122 32452	47PF 5% 63V
2453	4822 122 33848	47PF 5% 50V
2454	4822 122 33848	47PF 5% 50V
2455	5322 122 32452	47PF 5% 63V
2458	5322 122 32531	100PF 5% 50V
2459	4822 126 12882	100NF+80-20% 50V (FW363)

RESISTORS

3403	4822 116 52234	100K 5% 0.5W
3404	4822 116 52234	100K 5% 0.5W
3405	4822 051 10102	1k 2% 0.25W
3406	4822 051 10102	1k 2% 0.25W
3407	4822 051 10102	1k 2% 0.25W
3408	4822 051 10102	1k 2% 0.25W
3409	4822 051 10102	1k 2% 0.25W
3410	4822 051 10102	1k 2% 0.25W
3411	4822 051 10102	1k 2% 0.25W
3412	4822 051 10102	1k 2% 0.25W
3413	4822 051 10102	1k 2% 0.25W
3414	4822 051 10102	1k 2% 0.25W
3415	4822 051 10102	1k 2% 0.25W
3416	4822 051 10102	1k 2% 0.25W
3417	4822 051 10102	1k 2% 0.25W

RESISTO

3418
3419
3420
3421
3422
3423
3424
3425
3426
3427
3428
3429
3430
3431
3432
3433
3434
3435
3437
3438
3439
3440
3441
3442
3443
3444
3445
3446
3447
3448
3449
3450
3451
3452
3453
3454
3455
3456
3457
3458

FRONT BOARD PARTSLIST

0V
0% 50V
0V
0V
50V

50V
50V
50V
/
0V

50V
/
/
0% 50V
0V

0V(Not for -/21)
V(Not for -/21)
V(Not for -/21)
0V(Not for -/21)
0V

V
V
V
V
V

0V
% 50V (FW363)

W
W
/
/
/

/
/
/
/
/

/
/
/
/
/

RESISTORS

3418	4822 051 10102	1k 2% 0.25W
3419	4822 051 10102	1k 2% 0.25W
3420	4822 051 10102	1k 2% 0.25W
3421	4822 051 10102	1k 2% 0.25W
3422	4822 051 10102	1k 2% 0.25W
3423	4822 051 10102	1k 2% 0.25W
3424	4822 051 10102	1k 2% 0.25W
3425	4822 051 10102	1k 2% 0.25W
3426	4822 051 10102	1k 2% 0.25W
3427	4822 051 10102	1k 2% 0.25W
3428	4822 051 10102	1k 2% 0.25W
3429	4822 051 10102	1k 2% 0.25W
3430	4822 051 10102	1k 2% 0.25W
3431	4822 051 10102	1k 2% 0.25W
3432	4822 051 20331	330Ω 5% 0.1W
3433	4822 051 20331	330Ω 5% 0.1W
3434	4822 051 20331	330Ω 5% 0.1W
3435	4822 051 20103	10k 5% 0.1W
3437	4822 116 52284	47K 5% 0.5W
3438	4822 051 20103	10k 5% 0.1W
3439	4822 051 20103	10k 5% 0.1W
3440	4822 051 20474	470k 5% 0.1W
3441	4822 051 20474	470k 5% 0.1W
3442	4822 051 20103	10k 5% 0.1W
3443	4822 051 20224	220k 5% 0.1W
3444	4822 051 20331	330Ω 5% 0.1W
3445	4822 116 52219	330Ω 5% 0.5W
3446	4822 116 52219	330Ω 5% 0.5W
3447	4822 116 52219	330Ω 5% 0.5W
3448	4822 116 52219	330Ω 5% 0.5W
3449	4822 051 20331	330Ω 5% 0.1W
3450	4822 116 52219	330Ω 5% 0.5W
3451	4822 116 52219	330Ω 5% 0.5W
3452	4822 116 52219	330Ω 5% 0.5W
3453	4822 116 52219	330Ω 5% 0.5W
3454	4822 116 52219	330Ω 5% 0.5W
3455	4822 051 20331	330Ω 5% 0.1W
3456	4822 051 20331	330Ω 5% 0.1W
3457	4822 051 20331	330Ω 5% 0.1W
3458	4822 051 20331	330Ω 5% 0.1W

RESISTORS

3459	4822 051 20103	10k 5% 0.1W
3460	4822 051 20103	10k 5% 0.1W
3461	4822 051 20103	10k 5% 0.1W
3462	4822 051 20104	100k 5% 0.1W
3463	4822 051 20105	1M 5% 0.1W
3465	4822 051 20101	100Ω 5% 0.1W
3466	4822 051 20101	100Ω 5% 0.1W
3467	4822 051 20101	100Ω 5% 0.1W
3468	4822 051 20101	100Ω 5% 0.1W
3469	4822 051 20101	100Ω 5% 0.1W
3470	4822 051 20103	10k 5% 0.1W
3471	4822 051 20332	3k3 5% 0.1W
3472	4822 051 20103	10k 5% 0.1W
3473	4822 051 10102	1k 2% 0.25W
3475	4822 051 20103	10k 5% 0.1W
3477	4822 051 10102	1k 2% 0.25W
3478	4822 051 20684	680k 5% 0.1W
3479	4822 116 52235	1M 5% 0.5W
3480	4822 051 20473	47k 5% 0.1W
3481	4822 051 10102	1k 2% 0.25W
3482	4822 051 10102	1k 2% 0.25W
3483	4822 051 10102	1k 2% 0.25W
3484	4822 051 10102	1k 2% 0.25W
3485	4822 051 10102	1k 2% 0.25W
3486	4822 051 10102	1k 2% 0.25W
3490	4822 051 10102	1k 2% 0.25W
3491	4822 051 20104	100k 5% 0.1W
3493	4822 051 20103	10k 5% 0.1W
3494	4822 051 20103	10k 5% 0.1W
3495	4822 117 11449	2K2 1% 0.1W
3496	4822 051 10102	1k 2% 0.25W
3497	4822 051 10102	1k 2% 0.25W
3498	4822 051 10102	1k 2% 0.25W
3499	4822 051 10102	1k 2% 0.25W
3500	4822 051 10102	1k 2% 0.25W
3501	4822 051 10102	1k 2% 0.25W
3503	4822 051 10102	1k 2% 0.25W
3505	4822 051 10102	1k 2% 0.25W
3506	4822 051 10102	1k 2% 0.25W
3507	4822 051 10102	1k 2% 0.25W

FRONT BOARD PARTSLIST

RESISTORS

3508	4822 051 10102	1k 2% 0.25W
3509	4822 051 10102	1k 2% 0.25W
3510	4822 051 10102	1k 2% 0.25W
3512	4822 051 10102	1k 2% 0.25W
3513	4822 116 83864	10k 5% 0.5W
3514	4822 051 10102	1k 2% 0.25W
3515	4822 051 20103	10k 5% 0.1W
3516	4822 051 10102	1k 2% 0.25W
3517	4822 051 20103	10k 5% 0.1W
3518	4822 051 10102	1k 2% 0.25W
3519	4822 051 20103	10k 5% 0.1W
3520	4822 051 10102	1k 2% 0.25W
3521	4822 051 20103	10k 5% 0.1W
3525	4822 051 10102	1k 2% 0.25W
3527	4822 116 52245	150K 5% 0.5W
3528	4822 051 20103	10k 5% 0.1W
3529	4822 051 20103	10k 5% 0.1W
3530	4822 051 20479	47Ω 5% 0.1W
3531	4822 051 20103	10k 5% 0.1W
3532	4822 051 20103	10k 5% 0.1W
3533	4822 051 10102	1k 2% 0.25W
3534	4822 051 10102	1k 2% 0.25W
3536	4822 051 20101	100Ω 5% 0.1W
3537	4822 051 10102	1k 2% 0.25W
3538	4822 051 20103	10k 5% 0.1W
3540	4822 051 20103	10k 5% 0.1W (For -/21 & -/37)
3541	4822 051 10102	1k 2% 0.25W (For -/21 & -/37)
3542	4822 116 83864	10k 5% 0.5W (For -/22 & -/25)
3543	4822 117 11449	2k2 1% 0.1W (For -/22 & -/25)
3544	4822 051 20224	220k 5% 0.1W (For -/22 & -/25)
3545	4822 116 83864	10K 5% 0.5W (For -/22 & -/25)
3551	4822 051 10102	1k 2% 0.25W
3552	4822 051 10102	1k 2% 0.25W
3553	4822 051 10102	1k 2% 0.25W
3554	4822 051 10102	1k 2% 0.25W
3555	4822 051 10102	1k 2% 0.25W
3556	4822 051 20103	10k 5% 0.1W
3557	4822 051 20103	10k 5% 0.1W
3558	4822 051 20103	10k 5% 0.1W
3571	4822 051 20331	330Ω 5% 0.1W (FW373C)

RESISTORS

3572	4822 051 20331	330Ω 5% 0.1W (FW373C)
3573	4822 051 20331	330Ω 5% 0.1W (FW373C)
3574	4822 051 20103	10k 5% 0.1W
3580	4822 116 52276	3K9 5% 0.5W
3581	4822 051 20331	330Ω 5% 0.1W
3582	4822 051 20331	330Ω 5% 0.1W
3583	4822 051 20331	330Ω 5% 0.1W
3584	4822 051 20331	330Ω 5% 0.1W
3591	4822 052 10108	1Ω 5% 0.33W
3592	4822 052 10108	1Ω 5% 0.33W
3593	4822 051 20103	10k 5% 0.1W
3594	4822 116 83864	10K 5% 0.5W
3595	4822 116 83864	10K 5% 0.5W

CHIP JUMPER

4421	4822 051 20008	0Ω Jumper
4422	4822 051 20008	0Ω Jumper
4423	4822 051 20008	0Ω Jumper
4424	4822 051 20008	0Ω Jumper
4425	4822 051 20008	0Ω Jumper
4426	4822 051 20008	0Ω Jumper
4427	4822 051 20008	0Ω Jumper
4430	4822 051 20008	0Ω Jumper
4431	4822 051 20008	0Ω Jumper
4432	4822 051 20008	0Ω Jumper
4483	4822 051 20008	0Ω Jumper
4485	4822 051 20008	0Ω Jumper
4486	4822 051 20008	0Ω Jumper
4487	4822 051 20008	0Ω Jumper
4488	4822 051 20008	0Ω Jumper

COIL & CRYSTAL

5402	4822 242 70938	Crystal (32.768KHZ)
5403	4822 242 72195	Crystal 8MHz(Not for -/21)
5406	4822 156 21721	Coil 2.2μH 10%
5407	4822 156 21721	Coil 2.2μH 10%(Not for -/21)
5410	5322 242 73697	Filter 8MHz

DIODE

6401	4822 130 30621	1N4148
6402	4822 130 30621	1N4148
6412	4822 130 30621	1N4148
6413	4822 130 30621	1N4148
6414	4822 130 30621	1N4148

DIODE

6415	4822
6416	4822
6417	4822
6418	4822
6419	4822
6420	4822
6421	4822
6422	4822
6423	4822
6425	4822
6445	4822
6446	4822
6447	4822
6448	4822
6449	4822
6450	4822
6451	4822
6452	4822
6453	4822
6454	4822
6455	4822
6456	4822
6457	4822
6458	4822

INTERGRATE

7401	4822
7401	4822
7403	4822
7404	4822
7416	5322
5404	9350

TRANSISTOR

7406	5322
7407	5322
7414	5322
7415	5322
7417	5322
7420	5322
7428	4822

FRONT BOARD PARTSLIST

DIODE

6415	4822 130 30621	1N4148
6416	4822 130 30621	1N4148
6417	4822 130 82978	LTL-16KGE
6418	4822 130 82978	LTL-16KGE
6419	4822 130 82978	LTL-16KGE
6420	4822 130 82978	LTL-16KGE
6421	4822 130 82978	LTL-16KGE (FW373C)
6422	4822 130 82978	LTL-16KGE (FW373C)
6423	4822 130 82978	LTL-16KGE (FW373C)
6425	4822 130 82978	LTL-16KGE
6445	4822 130 30621	1N4148
6446	4822 130 30621	1N4148
6447	4822 130 30621	1N4148
6448	4822 130 30621	1N4148
6449	4822 130 30621	1N4148
6450	4822 130 30621	1N4148
6451	4822 130 30621	1N4148
6452	4822 130 30621	1N4148
6453	4822 130 30621	1N4148
6454	4822 130 30621	1N4148
6455	4822 130 30621	1N4148
6456	4822 130 30621	1N4148
6457	4822 130 30621	1N4148
6458	4822 130 30621	1N4148

INTERGRATED CIRCUIT

7401	4822 209 15441	TMP87CS71F-373S51391 (FW373C)
7401	4822 209 15442	TMP87CS71F-363S51381 (FW363)
7403	4822 209 31508	ST24C01B1
7404	4822 209 31981	SAA6579T/V1
7416	5322 209 12171	74HC4094D
5404	9350 400 70118	IC SAA6579T/VI (Not for -/21)

TRANSISTOR

7406	5322 130 42755	BC847C
7407	5322 130 42755	BC847C
7414	5322 130 42755	BC847C
7415	5322 130 42755	BC847C
7417	5322 130 42755	BC847C
7420	5322 130 42755	BC847C
7428	4822 130 10165	GP1U28XP

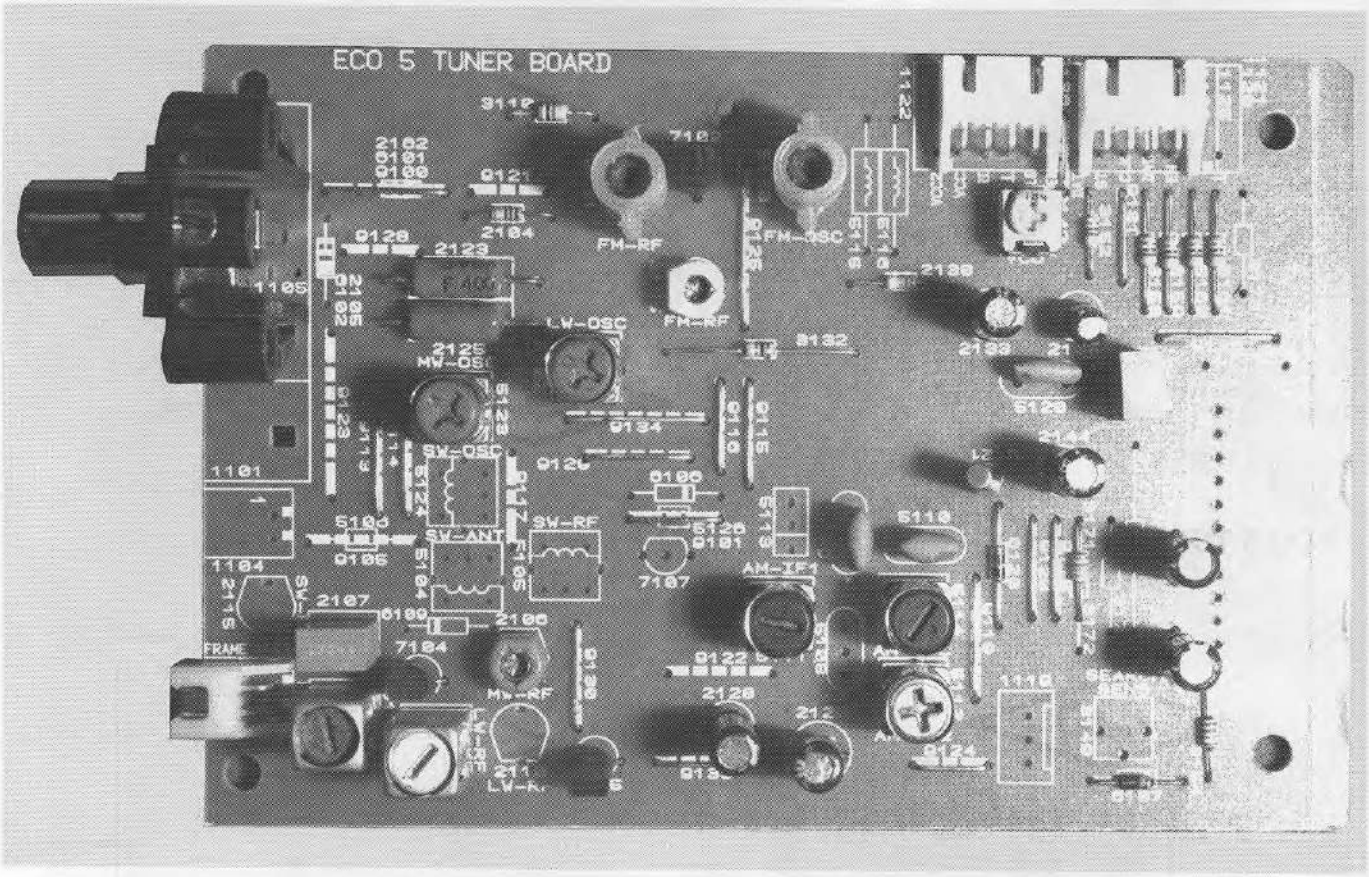

TUNER BOARD ECO5

TABLE OF CONTENTS

BLOCKDIAGRAM

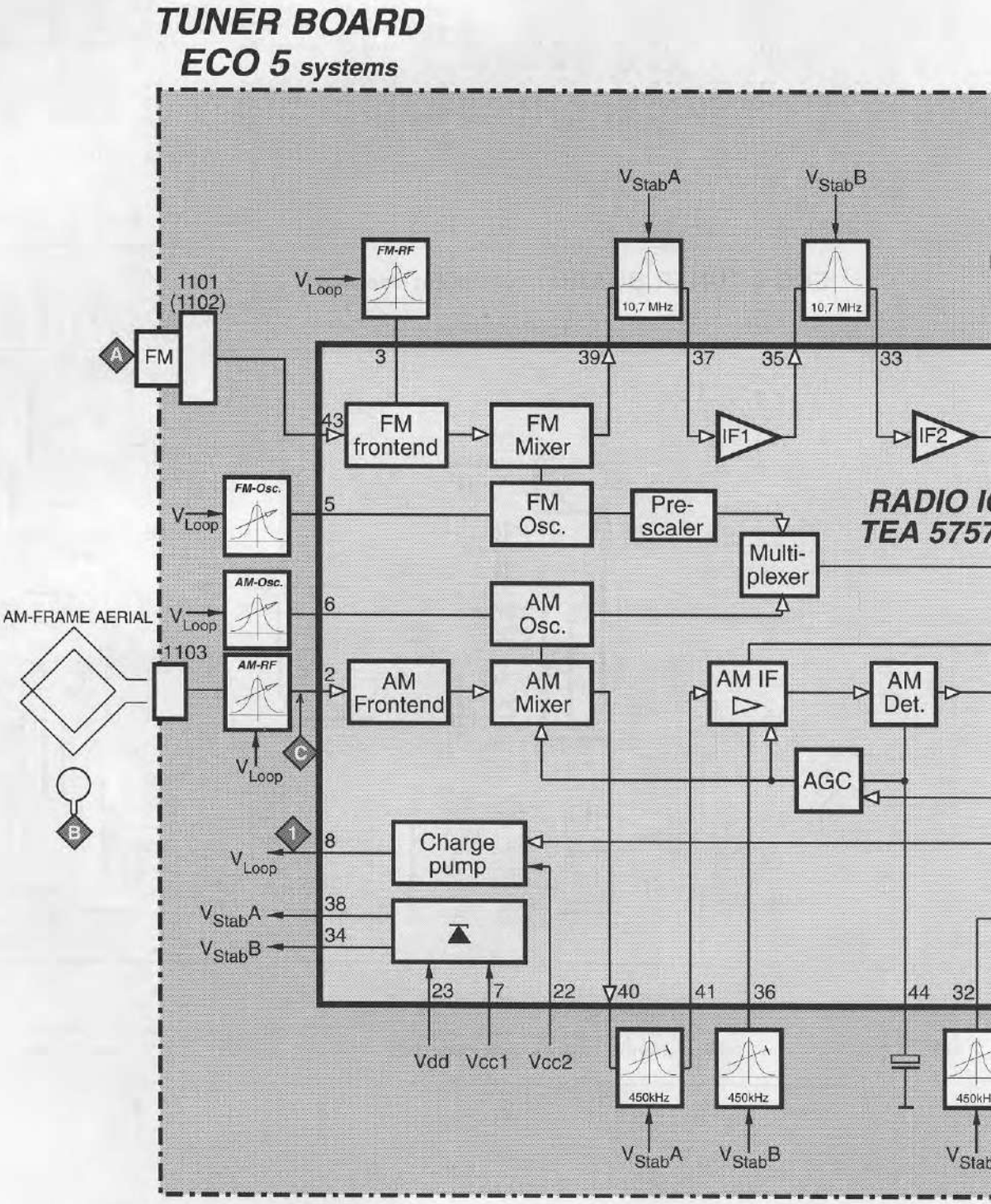

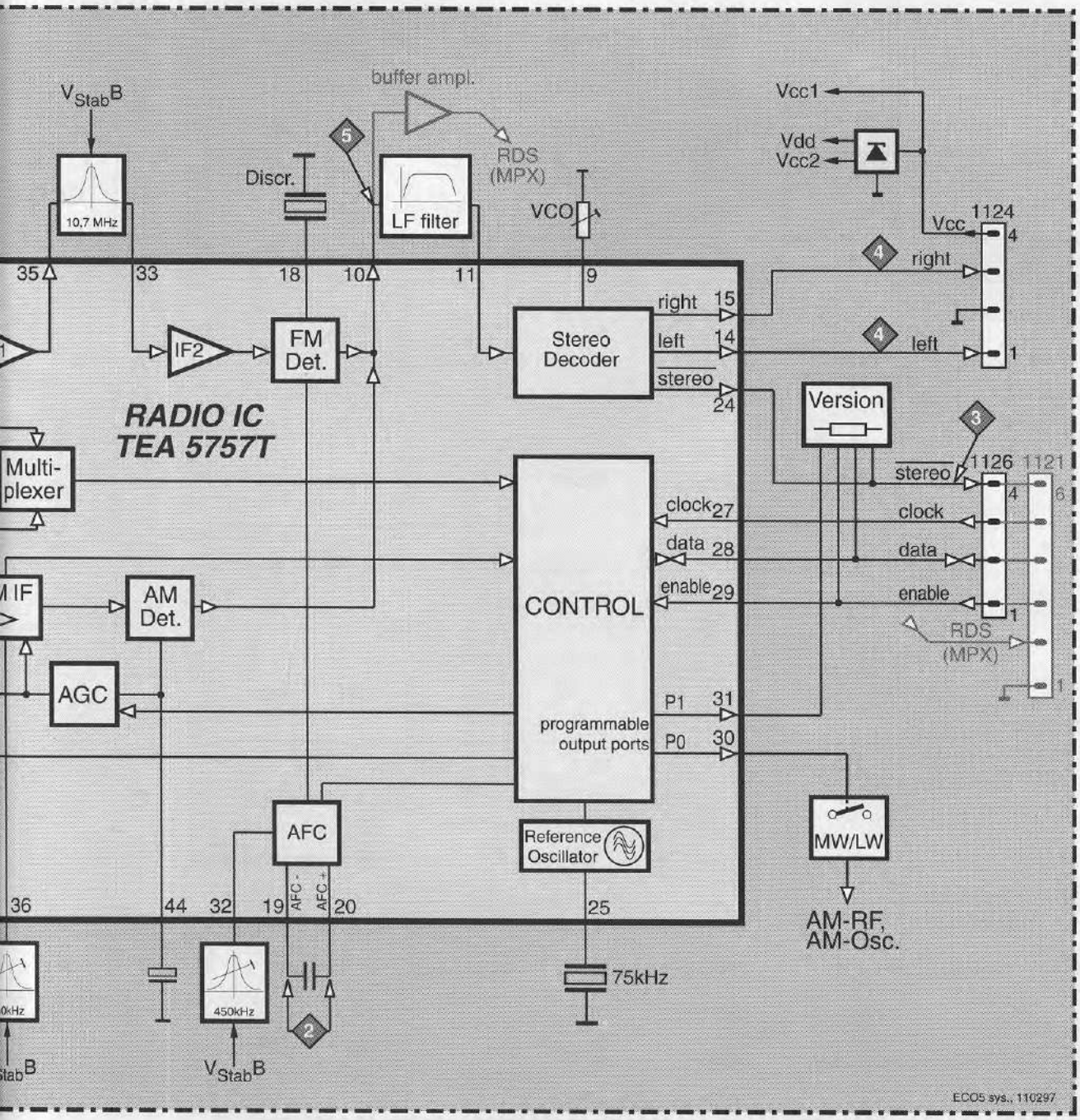
RADIO IC
TEA 5757T
$V_{Stab}B$
10,7 MHz
Discr.
buffer ampl.
RDS
(MPX)
LF filter
VCO
Vcc1
Vdd
Vcc2
Vcc
1124
right
left
35
33
18
10
11
9
IF2
FM
Det.
Stereo
Decoder
right 15
left 14
stereo
24
Version
Multi-
plexer
stereo
1126
1121
clock 27
data 28
enable 29
clock
data
enable
RDS
(MPX)
AM
Det.
CONTROL
AGC
P1 31
P0 30
programmable
output ports
AFC
Reference
Oscillator
MW/LW
AFC -
AFC +
36
44
32
19
20
25
AM-RF,
AM-Osc.
450kHz
75kHz
$V_{Stab}B$
ECO5 sys., 110297

TUNER ADJUSTMENT TABLE (ECO5 FM/MW- and FM/MW/LW - versions with AM-frame aerial)

Waverange	Input frequency	Input	Tuned to	Adjust	Output	Scope/Voltmeter
VARICAP ALIGNMENT						
FM 87.5 - 108MHz (65.81 - 74, 87.5 - 108MHz)			108MHz	5130	1	8V ±0.2V
			87.5MHz (65.81MHz)	check		4.3V ±0.5V (1.2V ±0.5V)
MW FM/AM-version, 10kHz grid 530 - 1700kHz			1700kHz	5123		8V ±0.2V
			530kHz	check		1.1V ±0.4V
FM/MW-version, 9kHz grid 531 - 1602kHz			1602kHz	5123		6.9V ±0.2V
			531kHz	check		1.1V ±0.4V
LW 153 - 279kHz			279kHz	5122		8V ±0.2V
			153kHz	check		1.1V ±0.4V
MW FM/MW/LW- version, 9kHz grid 531 - 1602kHz			1602kHz	5123		8V ±0.2V
			531kHz	check		1.1V ±0.4V
FM RF						
FM 87.5 - 108MHz (65.81 - 74, 87.5 - 108MHz)	108MHz	A mod=1kHz Δf=±22.5kHz	108MHz	2155	4	MAX
	87.5MHz (65.81MHz)		87.5MHz (65.81MHz)	5131		
VCO						
FM	98MHz, 1mV continuous wave	A	98MHz	3142	3	152kHz ±1kHz [1]
AM IF						
MW	450kHz connect pin 26 of IC 7101 (AM Osc.) with short wire to ground (pin 4)	C Δf=±15kHz V_{RF} = 3mV	IC 7101 36 100nF 220R	5111	4	max. f_o symmetric
			IC 7101 40 100nF 220R see remark [2]	5112		
AM AFC **MW**		C continuous wave V_{RF} = 10mV		5114	2	0 ± 2 mV DC
AM RF [3]						
MW [4] FM/MW/LW- and FM/MW-version (9kHz grid) 531 - 1602kHz	1494kHz	B Δf = ±30kHz V_{RF} as low as possible	1494kHz	2106	4	max. f_o symmetric
	558kHz		558kHz	5102		
LW	198kHz		198kHz	5103		
MW FM/AM-version, 10kHz grid 530 - 1700kHz	1500kHz		1500kHz	2106		
	560kHz		560kHz	5102		

ECO5, 170996

Use service test program. By selecting the TUNER TEST test frequencies will be stored as preset frequencies automatically.

[1] If sensitivity of frequency counter is too low adjust to max. channel separation (input signal: stereo left 90% + 9%, adjust output on right channel to minimum)

[2] RC network serves for damping the IF-filter while adjusting the other one.

[3] For AM RF adjustments the original frame antenna has to be used !

[4] MW has to be aligned before LW.

↕ Repeat

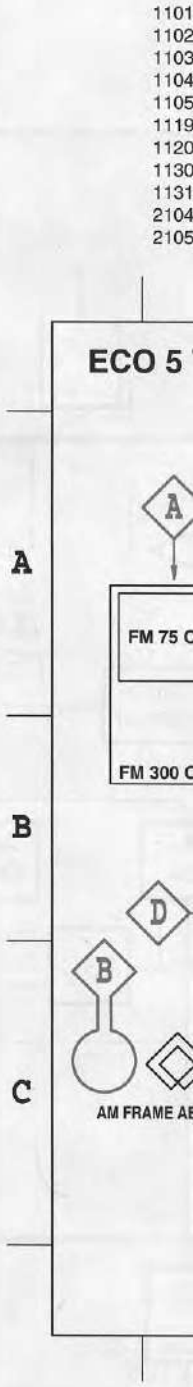

1101 A1	2106 C2	2137 C5	3147 B5	3172 C5	5112 C4	5130 A3	7104 C2	9118 B4	9130 C3
1102 A1	2107 C2	2138 A5	3149 C5	3173 A5	5113 B3	5131 A3	7105 C3	9119 C4	9131 A5
1103 C1	2110 C2	2140 B5	3152 A5	5102 C2	5114 C4	6101 A2	7107 B3	9120 B4	9133 C3
1104 B1	2115 C1	2144 B5	3154 C5	5103 C2	5115 A4	6102 A1	9100 A2	9121 A2	9134 B3
1105 A1	2123 A2	2148 B4	3157 B5	5104 C2	5116 A4	6103 A1	9101 B3	9122 C3	9136 A5
1119 C5	2125 A2	2155 A3	3158 A5	5105 B2	5120 B4	6104 A2	9105 B2	9123 B1	9137 A5
1120 A5	2128 C3	2162 A2	3159 A5	5106 B2	5121 B4	6106 B3	9111 C2	9124 C4	
1130 B5	2129 C4	3105 B3	3160 A5	5108 C4	5122 B3	6107 C5	9113 B2	9125 A3	
1131 B5	2130 A4	3110 A2	3161 A5	5109 B4	5123 B2	6109 C2	9114 B2	9126 B5	
2104 A2	2133 A4	3132 B3	3170 C5	5110 B4	5124 B2	6120 C4	9115 B3	9128 A2	
2105 A1	2135 B5	3142 A4	3171 C5	5111 C3	5126 B3	7102 A3	9117 B2	9129 B3	

2101
2102
2103
2108
2109
2112
2113
2114
2116
2117
2118

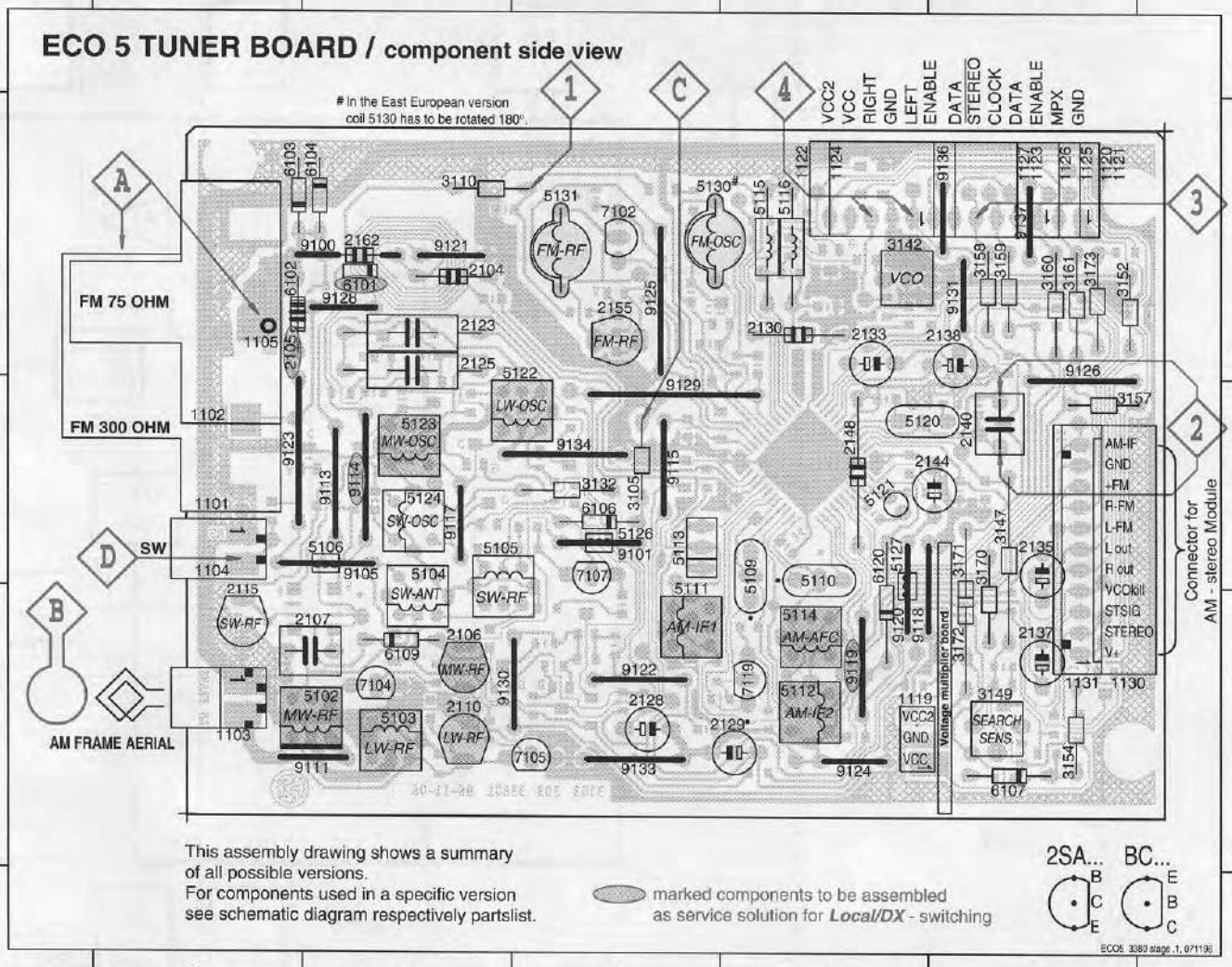

2101 C4	2119 B4	2141 B1	2154 C3	3101 C3	3116 A3	3133 B4	3153 C2	4103 C2	4151 B3	6110 A4	7121 B3
2102 C4	2120 B4	2142 B1	2156 C4	3102 C3	3117 B4	3134 B4	3155 A2	4104 A2	4152 B3	6111 B4	7122 B4
2103 C3	2122 B3	2143 A1	2157 B4	3103 C3	3118 B3	3136 B4	3156 A1	4105 B3	4153 B4	6130 C2	7123 B4
2108 A4	2124 A5	2145 C1	2158 B4	3104 B3	3120 B4	3137 B4	3167 C2	4106 B4	4154 C3	6131 C3	7124 C4
2109 A4	2126 C2	2146 C1	2159 C2	3106 C4	3121 A3	3140 B1	3168 B3	4107 C4	4155 A4	7101 B2	
2112 B5	2127 C2	2147 C1	2160 C4	3108 A4	3122 B3	3141 C2	3169 B2	4108 B4	4156 A2	7103 C2	
2113 A4	2131 C2	2149 B2	2161 A3	3109 A4	3123 A3	3143 C2	3175 A2	4109 A3	4157 B3	7106 A4	
2114 A4	2132 C1	2150 B2	2163 A2	3111 A3	3125 A3	3144 C2	3176 C2	4110 A3	4158 C2	7108 A3	
2116 B3	2134 C1	2151 C2	2165 B3	3112 A3	3126 B3	3145 C2	3177 A1	4111 C1	4159 A2	7109 A3	
2117 A3	2136 B1	2152 C3	2166 B2	3114 A3	3127 B3	3146 A1	4101 A4	4120 C2	4160 A1	7111 A1	
2118 B4	2139 B2	2153 C3	2167 B2	3115 A3	3128 B3	3148 A1	4102 A4	4150 B2	6105 A4	7120 B4	

ECO 5 TUNER BOARD / copper side view

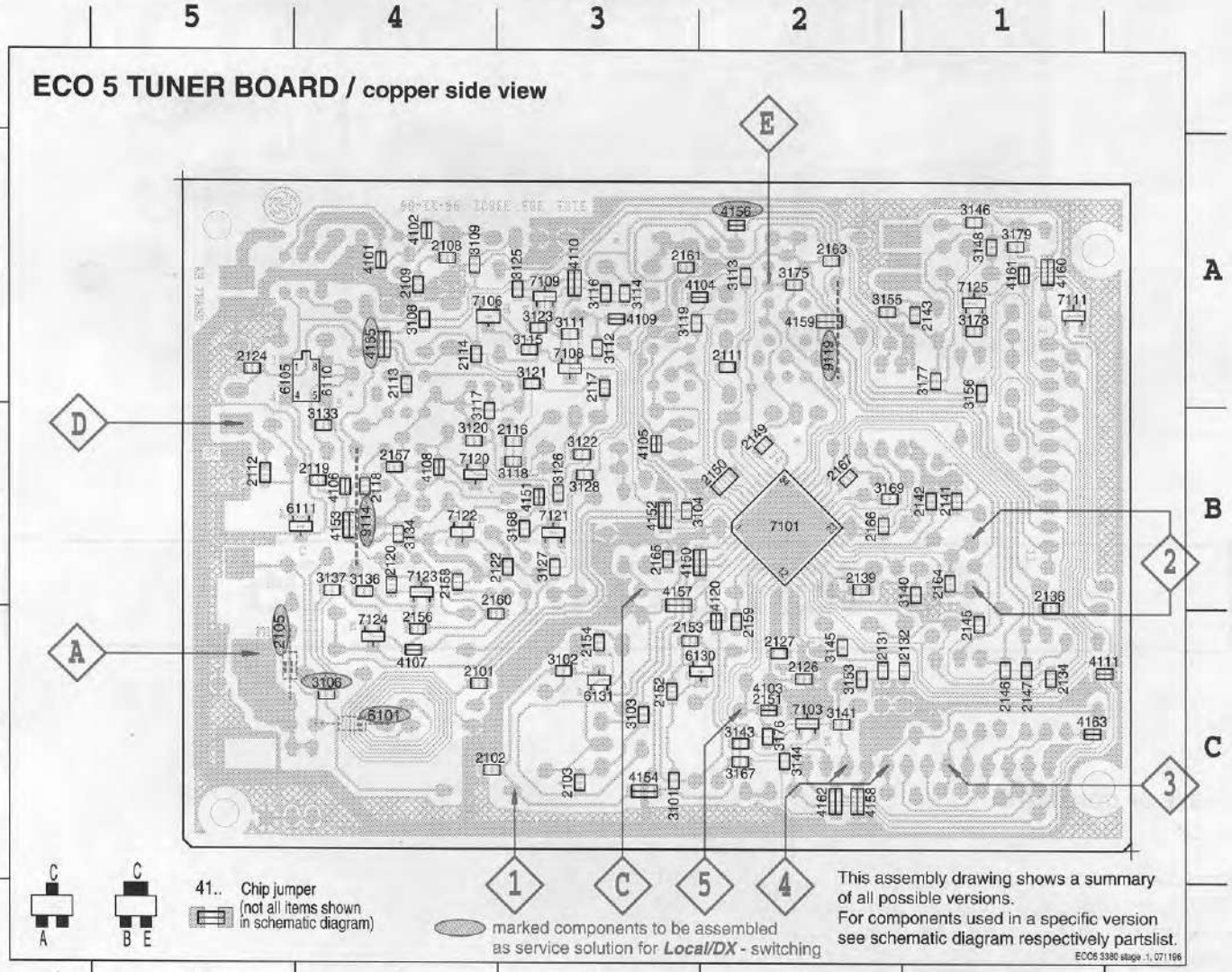

TUNER BOARD ECO5 / Systems

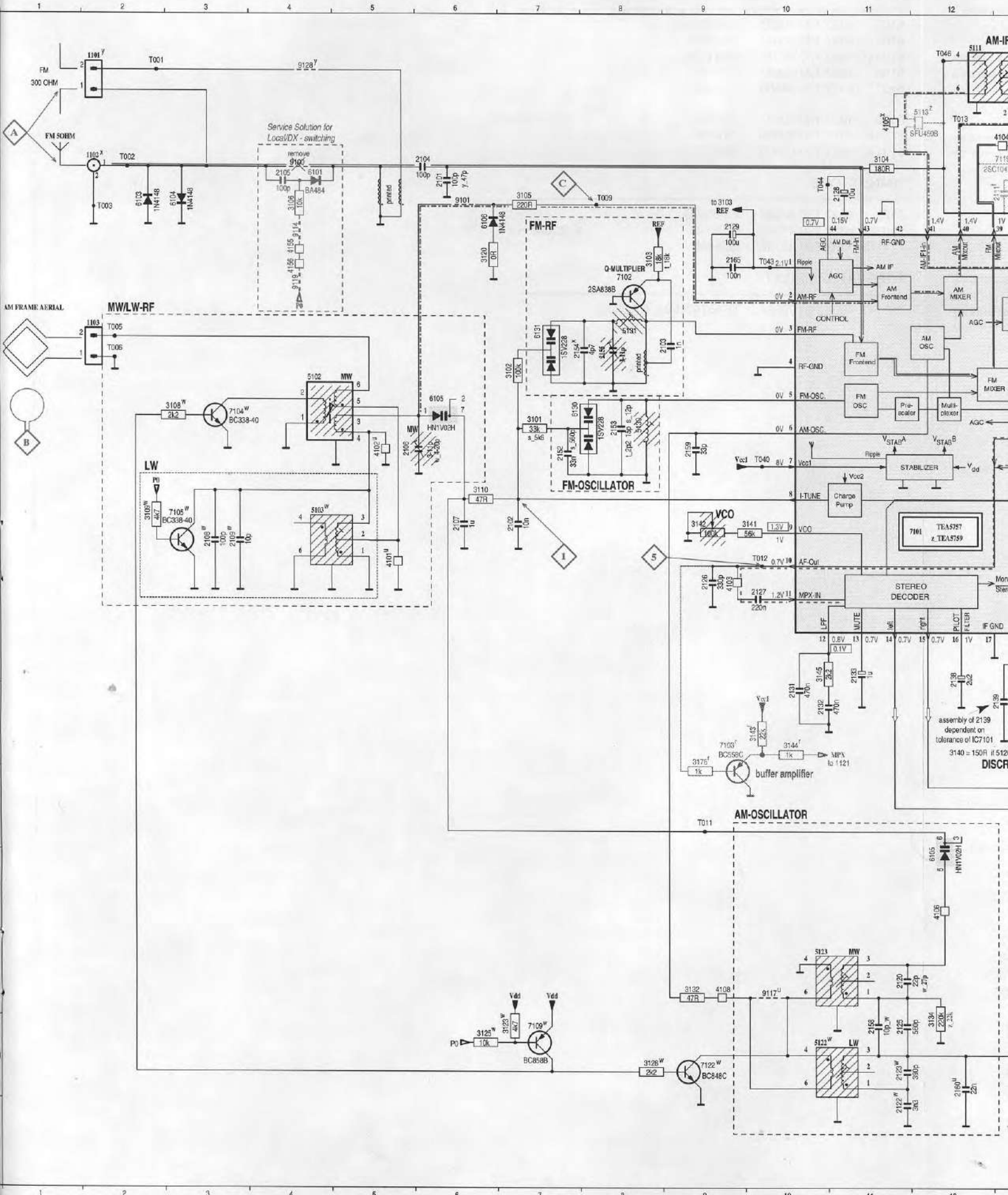

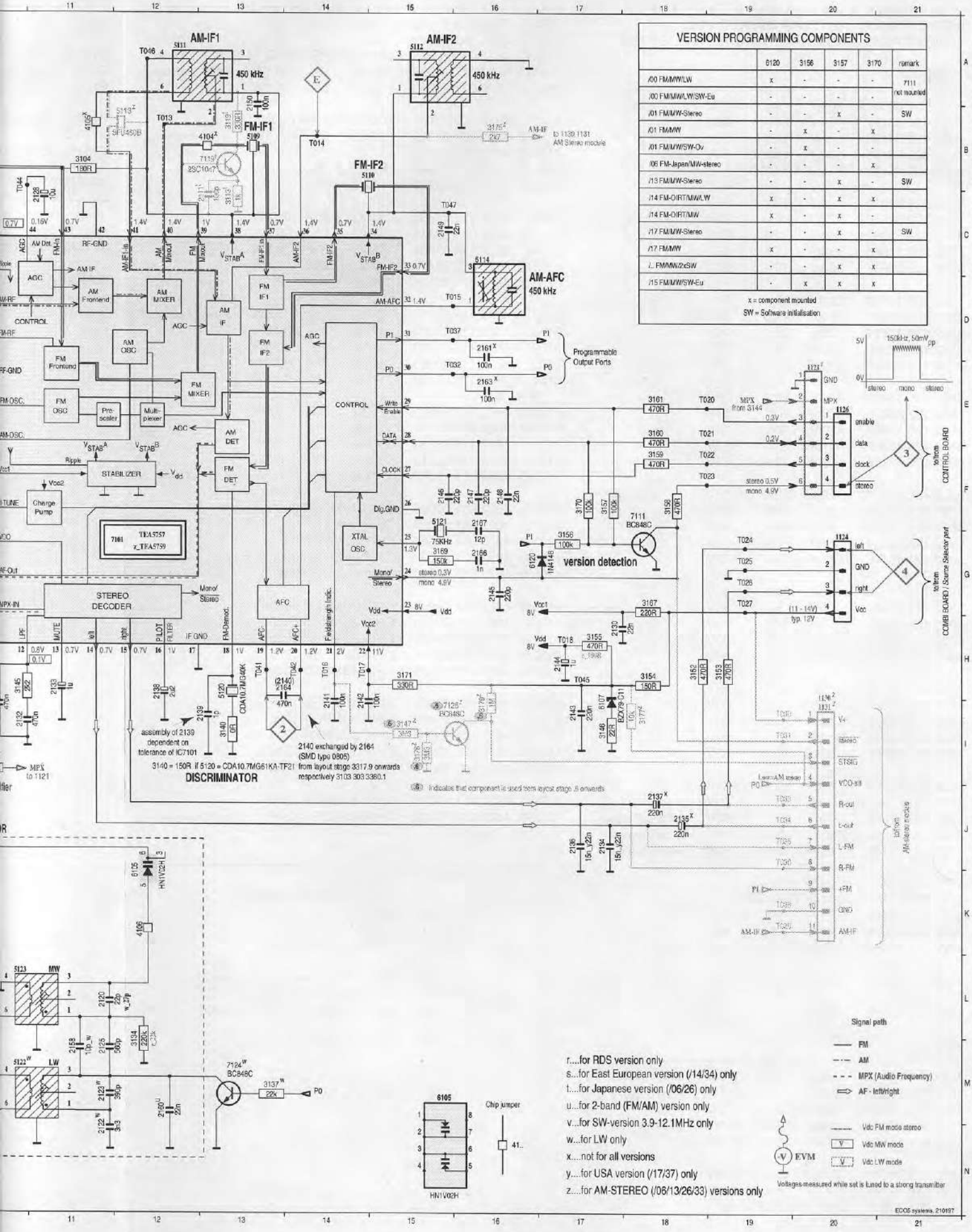

VERSION PROGRAMMING COMPONENTS

	6120	3156	3157	3170	remark
/00 FM/MW/LW	x	-	-	-	7111 not mounted
/00 FM/MW/LW/SW-Eu	-	-	-	-	
/01 FM/MW-Stereo	-	-	x	-	SW
/01 FM/MW	-	x	-	x	
/01 FM/MW/SW-Ov	-	x	-	-	
/06 FM-Japan/MW-stereo	-	-	-	x	
/13 FM/MW-Stereo	-	-	x	-	SW
/14 FM-OIRT/MW/LW	x	-	x	x	
/14 FM-OIRT/MW	x	-	x	-	
/17 FM/MW-Stereo	-	-	x	-	SW
/17 FM/MW	x	-	-	x	
/.. FM/MW/2xSW	-	-	x	x	
/15 FM/MW/SW-Eu	-	x	x	x	

x = component mounted
SW = Software initialisation

ELECTRICAL PARTSLIST ECO5 TUNER BOARD

MISCELLANEOUS

1101	4822 267 31505	ANTENNA SOCKET, 300Ω	
1102	4822 267 10283	ANTENNA SOCKET, COAX IEC 75Ω	

CAPACITORS

2101©	5322 122 32531	100pF	5%	50V		
2102©	4822 122 33177	10nF	20%	50V		
2103©	5322 122 34123	1nF	10%	50V		
2104	4822 122 33195	100pF	10%	50V		
2106	4822 125 60101	3-11pF TRIMCAP.				
2107	4822 121 51319	1µF	20%	50V		
2120©	5322 122 32658	22pF	5%	50V		
2125	4822 121 51381	560pF	1%	400V		
2126©	5322 122 31863	330pF	5%	50V		
2127©	4822 122 32927	220nF	10%	63V		
2127©	4822 126 13473	220nF	20%	50V		
2128	4822 124 41579	10µF	20%	50V		
2129	4822 124 41584	100µF	20%	10V		
2130	4822 126 11585	22nF	20%	50V		
2131©	4822 122 33325	470nF	20%	50V		
2131©	4822 126 13482	470nF	20%	16V		
2132©	4822 122 33325	470nF	20%	50V		
2132©	4822 126 13482	470nF	20%	16V		
2133	4822 124 40242	1µF	20%	63V		
2134©	4822 122 33128	15nF	10%	63V		not for USA
2134©	5322 122 32654	22nF	10%	63V		for USA only
2135	4822 124 40746	0,22µF	20%	63V		
2136©	4822 122 33128	15nF	10%	63V		not for USA
2136©	5322 122 32654	22nF	10%	63V		for USA only
2137	4822 124 40746	0,22µF	20%	63V		
2138	4822 124 41576	2,2µF	20%	50V		
2139©	5322 122 32447	1pF	5%	50V		
2141©	4822 126 10002	100nF	20%	50V		
2142©	4822 126 10002	100nF	20%	50V		
2143©	4822 126 13473	220nF	20%	50V		
2144	4822 124 40242	1µF	20%	63V		
2145©	4822 122 33575	220pF	5%	50V		
2146©	4822 122 33575	220pF	5%	50V		
2147©	4822 122 33575	220pF	5%	50V		
2148	4822 126 11585	22nF	20%	50V		
2149©	5322 122 32654	22nF	10%	63V		
2150©	4822 122 31947	100nF	20%	50V		
2152©	4822 122 33342	33nF	10%	63V		not for East Europe
2152©	5322 116 80853	560pF	5%	63V		for East Europe only
2153©	4822 122 32139	12pF	5%	63V		for East Europe only
2153©	5322 122 32481	15pF	5%	50V		not for East Europe
2155	4822 125 60101	3-11pF TRIMCAP.				
2159©	5322 122 32659	33pF	5%	50V		
2160©	5322 122 32654	22nF	10%	63V		
2164©	4822 126 13482	470nF	20%	16V		
2165©	4822 126 10002	100nF	20%	50V		
2166©	5322 122 34123	1nF	10%	50V		
2167©	4822 122 32139	12pF	5%	63V		

RESISTORS

3101©	4822 051 20333	33kΩ	5%	0,1W		not for East Europe
3101©	4822 051 20562	5,6kΩ	5%	0,1W		for East Europe only
3102©	4822 051 20104	100kΩ	5%	0,1W		
3103©	4822 051 20183	18kΩ	5%	0,1W		
3104©	4822 117 11448	180Ω	10%	0,1W		
3105	4822 116 83872	220Ω	5%	0,5W		
3110	4822 116 52195	47Ω	5%	0,5W		
3120©	4822 051 20008	CHIP JUMPER 0805				

RESISTORS

3132	4822 116 52195	47Ω	5%	0,5W		
3134©	4822 051 20224	220kΩ	5%	0,1W		
3140©	4822 051 20008	CHIP JUMPER 0805				5120=CDA10.7MG40K
3140©	4822 117 10353	150Ω	5%	0,1W		5120=CDA10.7MG61KA
3141©	4822 051 20563	56kΩ	5%	0,1W		
3142	4822 100 11163	100kΩ TRIMPOT. LIN.				
3143©	4822 051 20223	22kΩ	5%	0,1W		for RDS version only
3144©	4822 051 10102	1kΩ	5%	0,1W		for RDS version only
3145©	4822 117 11449	2,2kΩ	1%	0,1W		
3146©	4822 051 20229	22Ω	5%	0,1W		
3152	4822 116 83883	470Ω	5%	0,16W		
3153©	4822 051 20471	470Ω	5%	0,1W		
3154	4822 116 83868	150Ω	5%	0,5W		
3155©	4822 051 20471	470Ω	5%	0,1W		
3156©	4822 051 20104	100kΩ	5%	0,1W		for /21/30/33 only
3157	4822 116 52234	100kΩ	5%	0,5W		for East Europe only
3158	4822 116 83883	470Ω	5%	0,16W		
3159	4822 116 83883	470Ω	5%	0,16W		
3160	4822 116 83883	470Ω	5%	0,16W		
3161	4822 116 83883	470Ω	5%	0,16W		
3167©	4822 117 11503	220Ω	5%	0,1W		
3169©	4822 051 20154	150kΩ	5%	0,1W		
3170	4822 116 52234	100kΩ	5%	0,5W		
3171	4822 116 52219	330Ω	5%	0,5W		
3176©	4822 051 10102	1kΩ	5%	0,1W		for RDS version only
4101©	4822 051 20008	CHIP JUMPER 0805				
4102©	4822 051 20008	CHIP JUMPER 0805				
4103©	4822 051 20008	CHIP JUMPER 0805				
4104©	4822 051 20008	CHIP JUMPER 0805				
4105©	4822 051 20008	CHIP JUMPER 0805				
4106©	4822 051 20008	CHIP JUMPER 0805				
4108©	4822 051 20008	CHIP JUMPER 0805				
4111©	4822 051 20008	CHIP JUMPER 0805				
4120©	4822 051 20008	CHIP JUMPER 0805				
4150©	4822 051 10008	CHIP JUMPER 1206				
4152©	4822 051 10008	CHIP JUMPER 1206				
4153©	4822 051 10008	CHIP JUMPER 1206				
4154©	4822 051 10008	CHIP JUMPER 1206				
4157©	4822 051 10008	CHIP JUMPER 1206				
4158©	4822 051 10008	CHIP JUMPER 1206				
4159©	4822 051 10008	CHIP JUMPER 1206				
4162©	4822 051 10008	CHIP JUMPER 1206				for RDS version only

COILS

5102	4822 157 71634	RF-COIL MW
5109	4822 242 70665	CER. FILTER 10,7MHZ
5110	4822 242 70665	CER. FILTER 10,7MHZ
5111	4822 158 60511	AM-IF FILTER 450kHz
5112	4822 157 70302	AM-IF FILTER 450kHz
5114	4822 157 70302	AM-IF FILTER 450kHz (AM AFC)
5120	4822 242 10251	CER. DISCRIMINATOR 10.7MG61KA-TF21
5120	4822 242 82065	CER. DISCRIMINATOR 10.7MG40K
5121	4822 242 10261	QUARTZ 75kHz
5123	4822 157 60517	OSC. COIL MW
5130	4822 156 30947	RF COIL 1,5 TURNS
5131	4822 156 30947	RF COIL 1,5 TURNS

ELECTRICAL PA

DIODES

6103	4822 130
6104	4822 130
6105©	4822 130
6106	4822 130
6107	4822 130
6120	4822 130
6130©	4822 130
6131©	4822 130

TRANSISTORS

7102	4822 130
7103©	4822 130
7111©	5322 130

INTEGRATED CIR

7101©	4822 209

ELECTRICAL PARTSLIST ECO5 TUNER BOARD

DIODES

6103	4822 130 30621	1N4148	
6104	4822 130 30621	1N4148	
6105©	4822 130 83075	HN1V02H	
6106	4822 130 30621	1N4148	
6107	4822 130 34488	BZX79-C11	
6120	4822 130 30621	1N4148	not for /21/30/33
6130©	4822 130 82833	1SV228	
6131©	4822 130 82833	1SV228	

TRANSISTORS

7102	4822 130 60093	2SA838B	
7103©	4822 130 42513	BC558C	for RDS version only
7111©	5322 130 42136	BC848C	

INTEGRATED CIRCUITS

7101©	4822 209 90924	TEA5757H/V1, RADIO IC

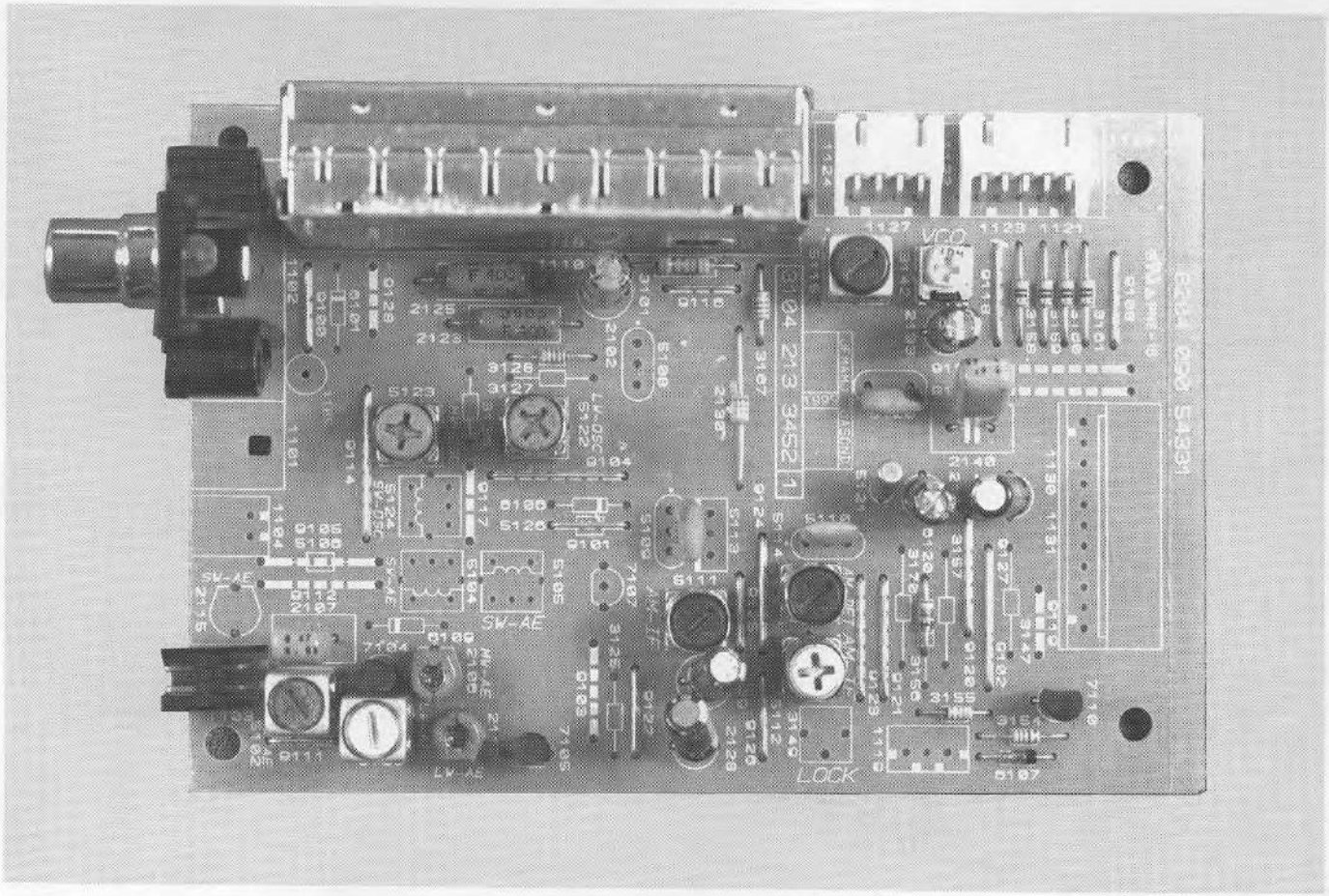

TUNER 95 BOARD

TABLE OF CONTENTS

BLOCKDIAGRAM

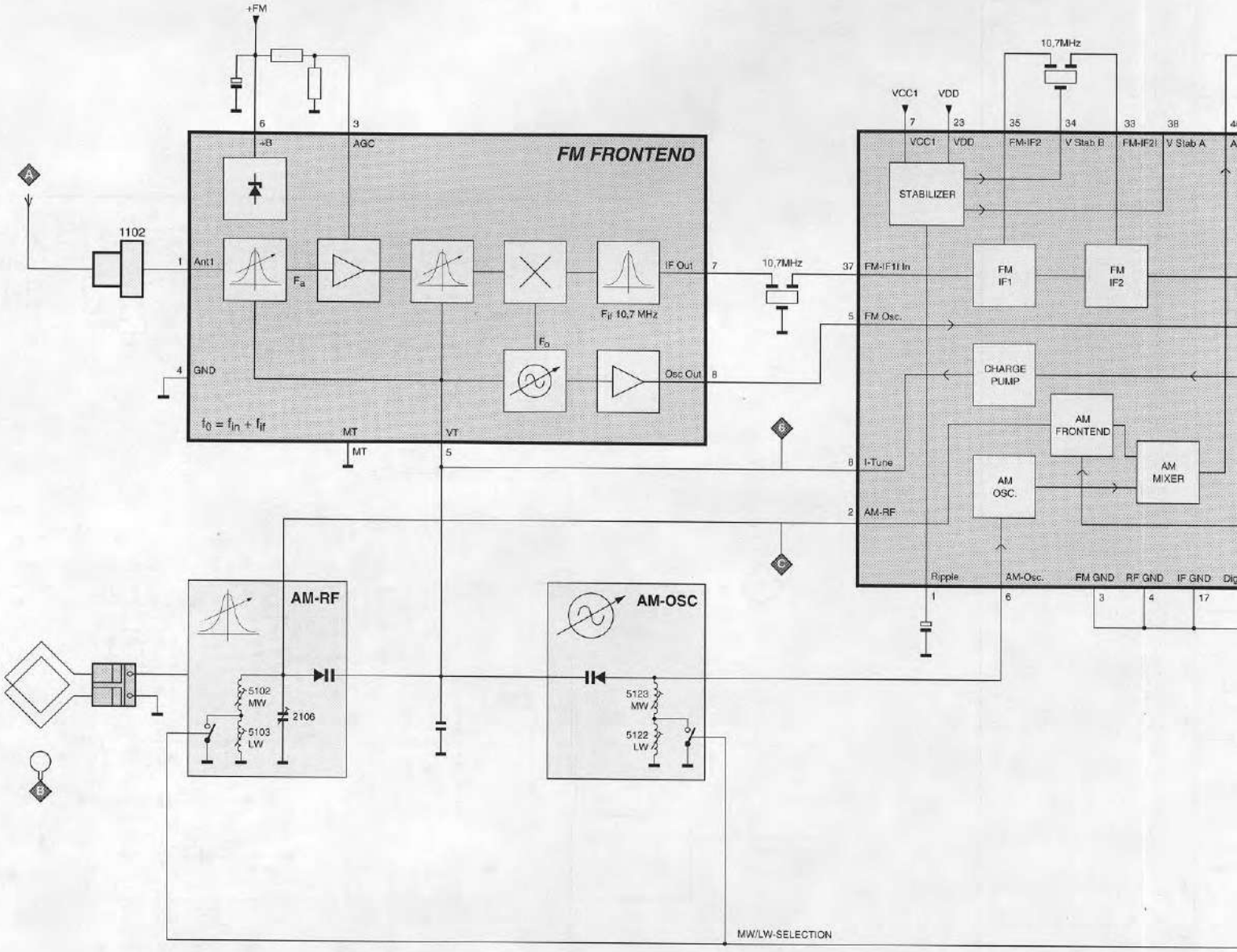

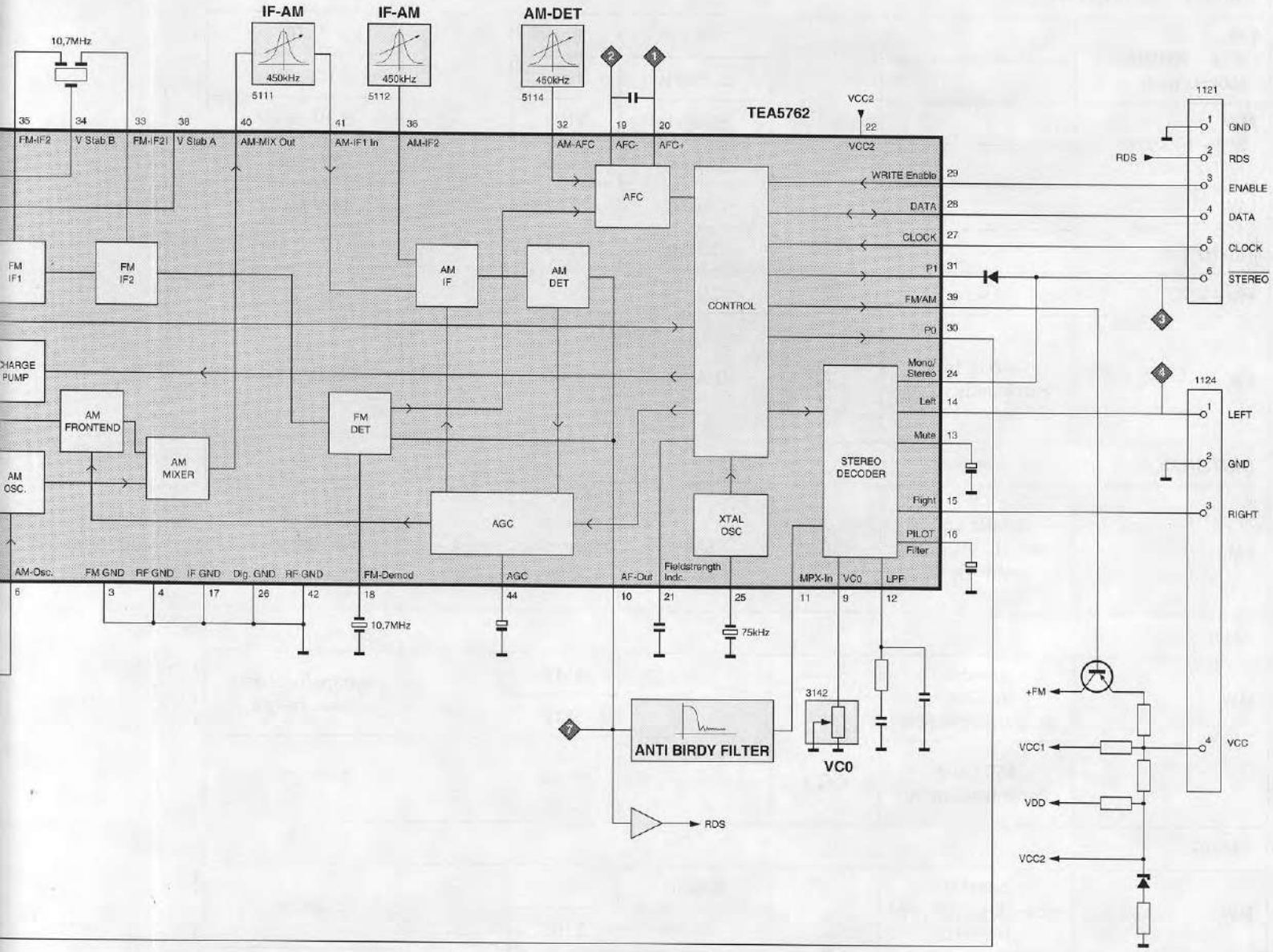
IF-AM
IF-AM
AM-DET
450kHz
450kHz
450kHz
10,7MHz
5111
5112
5114
TEA5762
VCC2
35
34
33
38
40
41
36
32
19
20
22
FM-IF2
V Stab B
FM-IF2I
V Stab A
AM-MIX Out
AM-IF1 In
AM-IF2
AM-AFC
AFC-
AFC+
VCC2
AFC
CONTROL
WRITE Enable 29
DATA 28
CLOCK 27
P1 31
FM/AM 39
P0 30
Mono/ Stereo 24
Left 14
Mute 13
Right 15
PILOT Filter 16
STEREO DECODER
FM IF1
FM IF2
AM IF
AM DET
CHARGE PUMP
AM FRONTEND
AM MIXER
FM DET
AM OSC.
AGC
XTAL OSC
AM-Osc.
FM GND
RF GND
IF GND
Dig. GND
RF GND
FM-Demod
AGC
AF-Out
Fieldstrength Indc.
MPX-In
VC0
LPF
6
3
4
17
26
42
18
44
10
21
25
11
9
12
10,7MHz
75kHz
3142
VC0
ANTI BIRDY FILTER
RDS
1121
GND
RDS
ENABLE
DATA
CLOCK
STEREO
1124
LEFT
GND
RIGHT
VCC
+FM
VCC1
VDD
VCC2

ADJUSTMENT TABLE

Waverange	Input frequency	Input	Tuned to	Adjust	Output	Scope/Voltmeter
VARICAP ALIGNMENT						
FM 87.5 - 108MHz (50kHz grid)			108MHz	check	6	7...9V
			87.5MHz	check		1.3...2V
MW 531 - 1602kHz (9kHz grid)			1602kHz	5123		8.3V ±0.2V
			531kHz	check		1V ±0.4V
LW 153 - 279kHz (3kHz grid)			279kHz	5122		8.3V ±0.2V
			153kHz	check		1V ±0.4V
FM - VCO						
FM	98MHz 1mV continuous wave	A	98MHz	3142	3	152kHz ±1kHz
DISTORTION						
FM	98MHz 1mV 90% L, 9% pilot mod=1kHz	A	98MHz	mixcoil inside tuner 1110	4	min. distortion
AM IF						
MW	450kHz Δf=10kHz as low as possible	100nF 50R C		5111	7	symmetrical and max. height
				5112		
	450.0kHz continuous wave	C		5114	1 2	0mV ±2mV
AM RF						
MW	588kHz mod=1kHz, 30% AM 1494kHz	B*	558kHz	5102	7	MAX
			1494kHz	2106		
LW	198kHz mod=1kHz, 30% AM		198kHz	5103		MAX

* Signal supplied via frame antenna

↕ Repeat

TUNER 95 – Copperside view

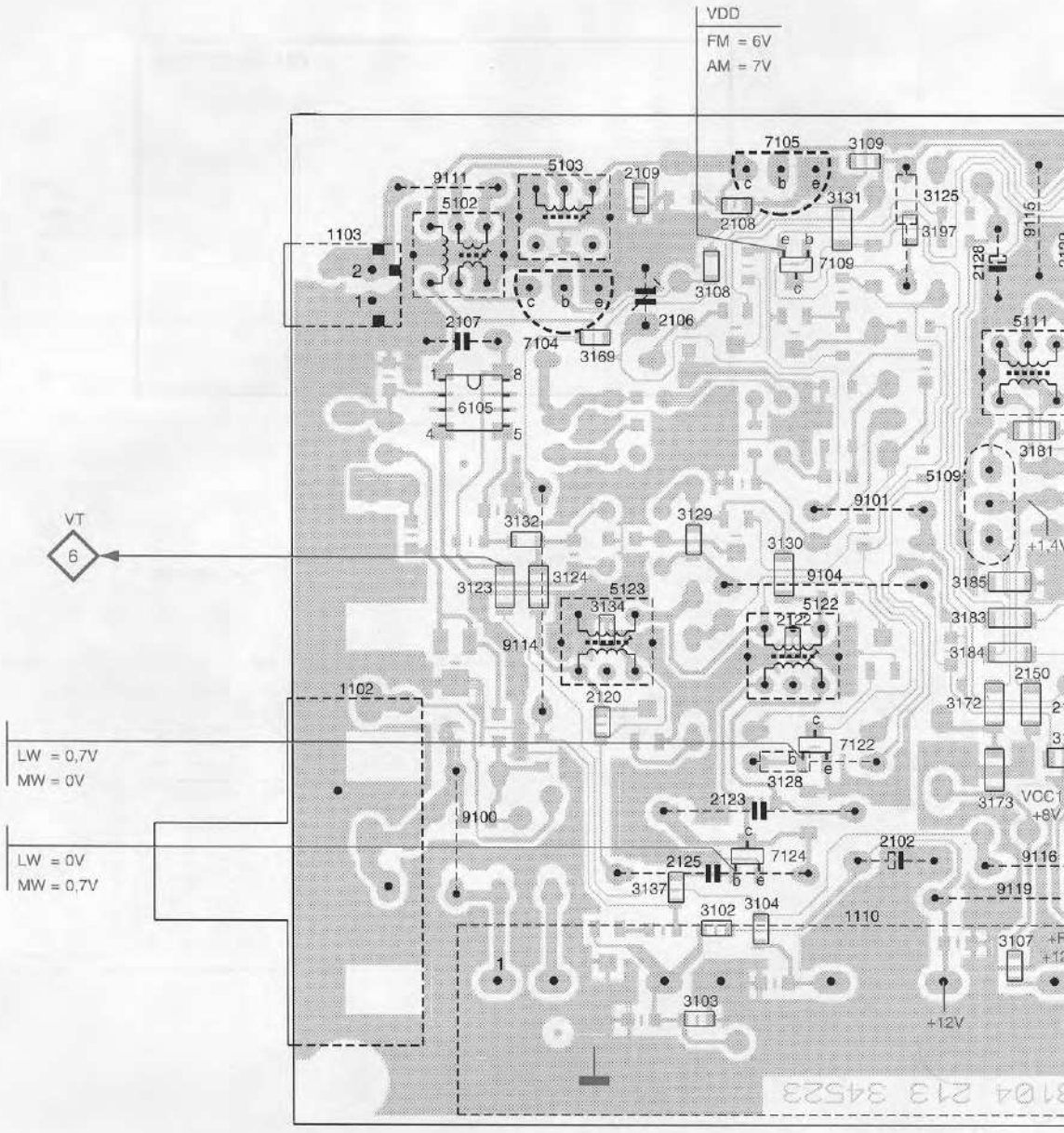

IC 6105

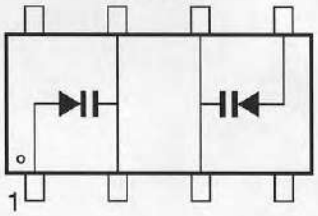

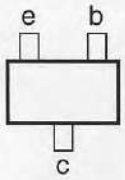

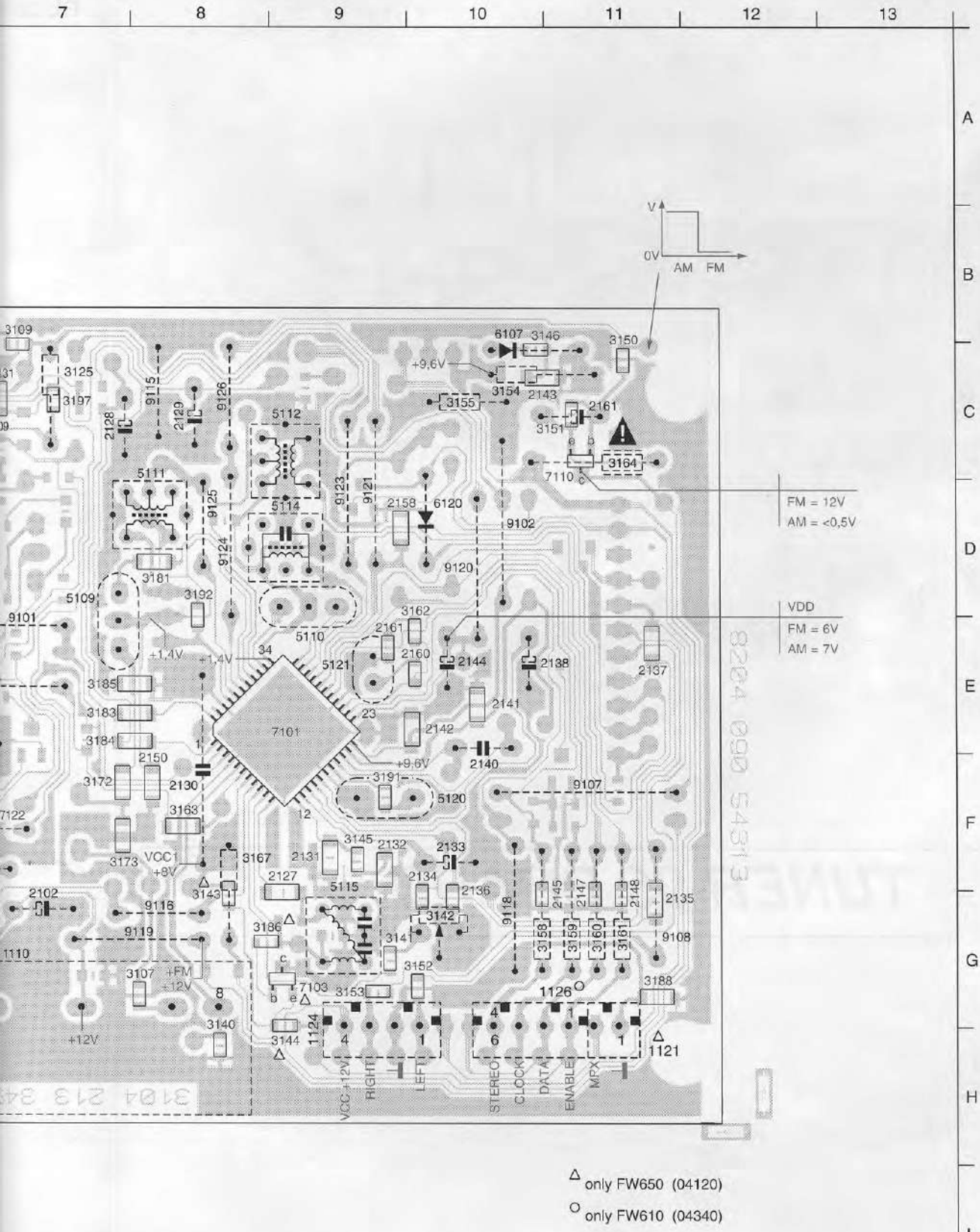

Δ only FW650 (04120)

○ only FW610 (04340)

1102	F4	3181	D8
1103	C3	3183	E7
1110	G7	3184	E7
1121	H11	3185	E7
1124	H9	3186	G8
1126	G10	3188	G11
2102	G7	3191	F9
2106	C5	3192	D8
2107	D4	3197	C7
2108	C6	5102	C4
2109	C5	5103	C5
2120	F5	5109	D7
2122	E6	5110	E9
2123	F6	5111	C8
2125	G5	5112	C9
2127	F8	5114	D9
2128	C7	5115	G9
2129	C8	5120	F10
2130	F8	5121	E9
2131	F9	5122	E6
2132	F9	5123	E5
2133	F10	6105	D4
2134	F9	6107	B10
2135	G11	6120	D10
2136	G10	7101	E9
2137	E11	7103	G9
2138	E10	7104	D5
2140	F10	7105	B6
2141	E10	7109	C6
2142	E10	7110	D11
2143	C10	7122	F7
2144	E10	7124	G6
2145	G11	9100	F4
2147	G11	9101	E7
2148	G11	9102	D10
2150	F8	9104	E6
2158	D9	9107	F11
2160	E9	9108	G11
2161	E9	9111	C4
2161	C11	9114	E5
3102	G6	9115	C8
3103	H6	9116	G8
3104	G6	9118	G10
3107	G7	9119	G7
3108	C6	9120	D10
3109	B7	9121	D9
3123	E4	9123	D9
3124	E5	9124	D8
3125	C7	9125	D8
3128	F6	9126	C8
3129	E6		
3130	E6		
3131	C6		
3132	E5		
3134	E5		
3137	G5		
3140	H8		
3141	G9		
3142	G10		
3143	G8		
3144	H8		
3145	F9		
3146	B10		
3150	C11		
3151	C10		
3152	G9		
3153	G9		
3154	C10		
3155	C10		
3158	G10		
3159	G11		
3160	G11		
3161	G11		
3162	E9		
3163	F8		
3164	C11		
3167	F8		
3169	D5		
3172	F7		
3173	F7		

LEU0119
9533

1102	D1	1124	F21	2108	L3	2123	L7	2129	I8	2133	G18	2137	G19	2142	K19	2147	E19	2160	I15	3103	C3	3109	K2	3128	L9	3132	J7	3141	I16	3145	I17	3152	F2
1103	G2	2102	C2	2109	L3	2125	L7	2130	J20	2134	G19	2138	H18	2143	K20	2148	E20	2161	I15	3104	G4	3123	I6	3129	K9	3134	L6	3142	I16	3146	L20	3153	G2
1110	D4	2106	J4	2120	K7	2127	H16	2131	I17	2135	F19	2140	C14	2144	K20	2150	C6	2162	H20	3107	C6	3124	K7	3130	K9	3137	L6	3143	K17	3150	H19	3154	J2
1121	C21	2107	J6	2122	M7	2128	I13	2132	I17	2136	H19	2141	H15	2145	E19	2158	L18	3102	B2	3108	J2	3125	L10	3131	M10	3140	F7	3144	K17	3151	I20	3155	J2

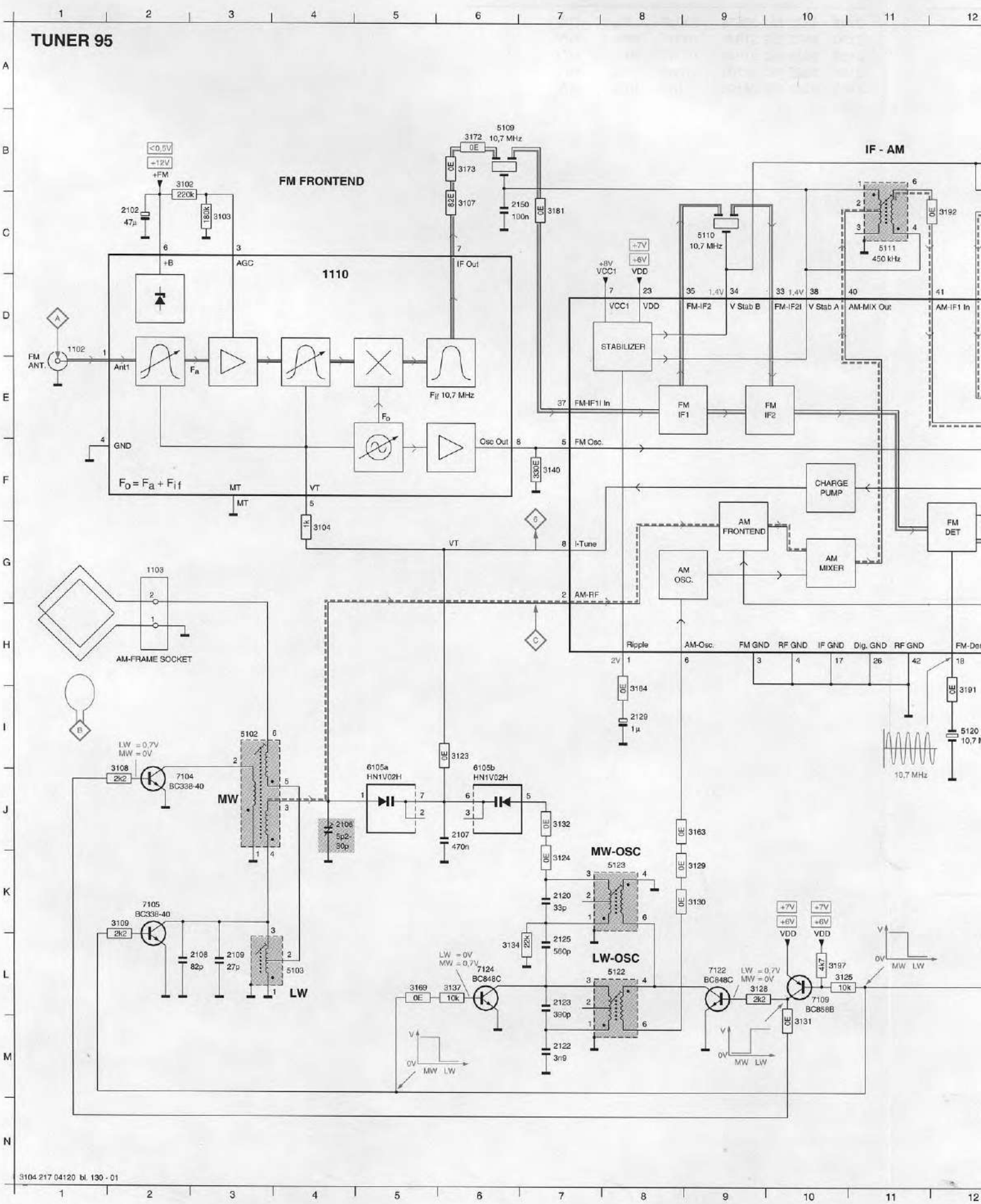

3132	J7	3141	I16	3145	I17	3152	F20	3158	E20	3162	I15	3169	L5	3183	I13	3188	M20	5102	I3	5111	C11	5120	I12	6105a	I5	7101	C16	7109	L10
3134	L6	3142	I16	3146	L20	3153	G20	3159	E20	3163	J9	3172	B6	3184	I8	3191	I12	5103	L4	5112	C12	5121	I15	6105b	I6	7103	K17	7110	I19
3137	L6	3143	K17	3150	H19	3154	J20	3160	D20	3164	I20	3173	B6	3185	I13	3192	C12	5109	B6	5114	C13	5122	L8	6107	K20	7104	J2	7122	L9
3140	F7	3144	K17	3151	I20	3155	J20	3161	D20	3167	I20	3181	C7	3186	K16	3197	L10	5110	C9	5115	J15	5123	K8	6120	E18	7105	K2	7124	L6

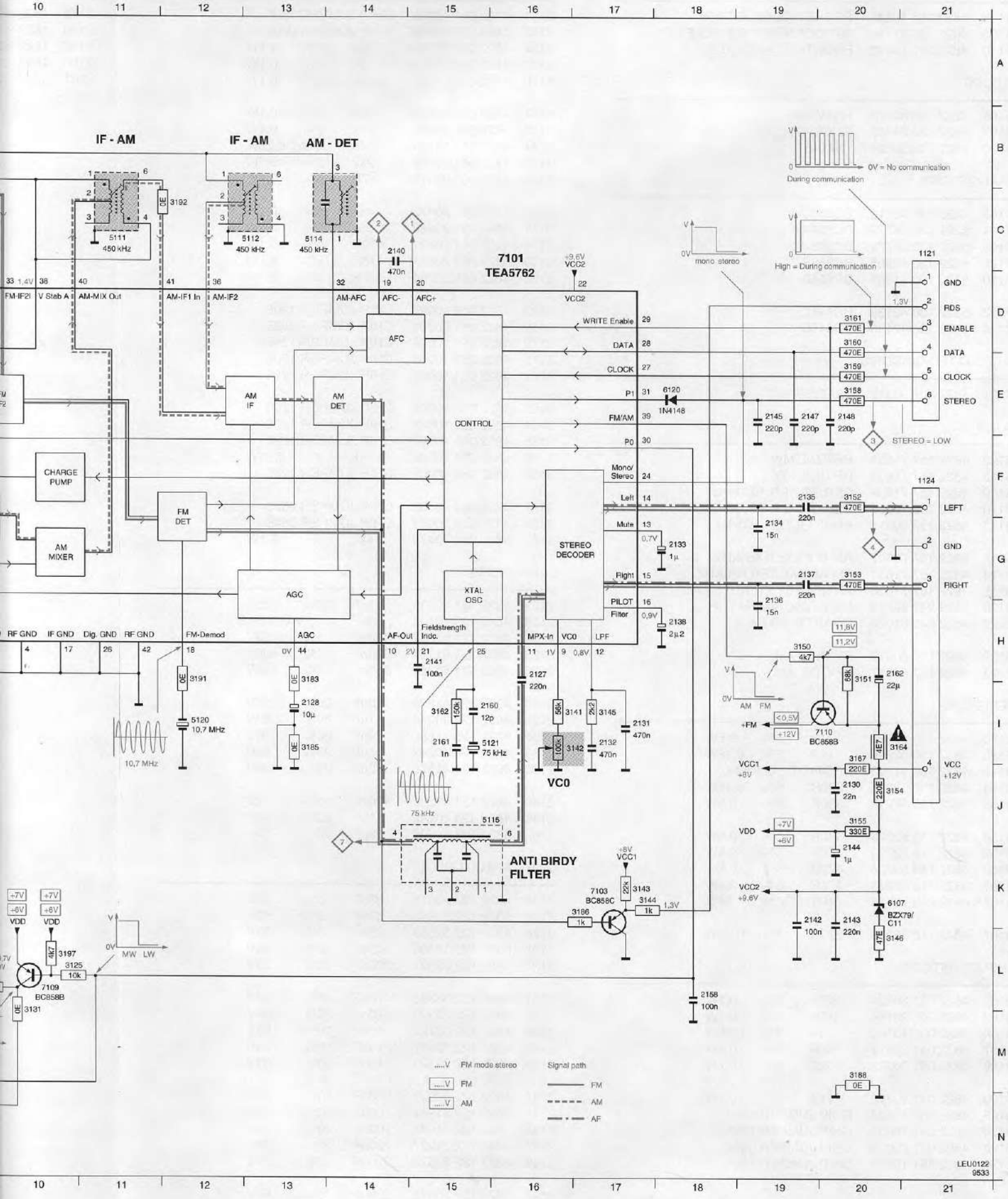

ELECTRICAL PARTSLIST TUNER 95 BOARD

MISCELLANEOUS

1102	4822 267 10283	SOCKET COAX IEC 75R
1103	4822 265 31184	JST CONNECTOR 2 POLE
1110	4822 210 10492	FRONTEND ASSY /02/08

DIODES

6105	4822 130 83075	HN1V02H
6107	4822 130 34488	BZX79-C11
6120	4822 130 30621	1N4148

TRANSISTORS

7103	4822 130 42513	BC858C
7104	5322 130 44779	BC338-40
7105	5322 130 44779	BC338-40
7109	5322 130 41983	BC858B
7110	5322 130 41983	BC858B
7122	5322 130 42136	BC848C
7124	5322 130 42136	BC848C

INTEGRATED CIRCUITS

7101	4822 209 90315	TEA5762H/V1

COILS

5102	4822 157 71634	RF-COIL MW
5103	4822 157 71635	RF-COIL LW
5109	4822 157 71639	CER. FILTER 10,7MHz
5110	4822 242 70665	CER. FILTER 10,7MHZ
5111	4822 158 60511	AM-IF FILTER 450kHz
5112	4822 157 70302	AM-IF FILTER 450kHz
5114	4822 157 71637	AM-AFC FILTER 450KHZ
5115	4822 157 71636	ANTI-BIRDY FILTER
5120	4822 242 82065	CER. DISCRIMINATOR
5121	4822 242 81021	QUARTZ 75kHz
5122	4822 157 60517	RF-COIL AM
5123	4822 157 60517	RF-COIL AM

RESISTORS

3125	4822 116 83864	10k	5%	0,5W
3128	4822 116 52256	2k2	5%	0,16W
3142	4822 100 11163	TRIMPOT. 100K LIN.		
3154	4822 116 52215	220R	5%	0,16W
3155	4822 116 52219	330R	5%	0,5W
3158	4822 116 52224	470R	5%	0,5W
3159	4822 116 52224	470R	5%	0,5W
3160	4822 116 52224	470R	5%	0,5W
3161	4822 116 52224	470R	5%	0,5W
3164	4822 052 10478	4R7	5%	NFR
3167	4822 116 52215	220R	5%	0,16W

CHIP RESISTORS

3102	4822 051 20224	220k	5%	0,1W
3103	4822 051 20184	180k	5%	0,1W
3104	4822 051 10102	1k	2%	0,25W
3107	4822 051 20829	82R	5%	0,1W
3108	4822 051 20222	2k2	5%	0,1W
3109	4822 051 20222	2k2	5%	0,1W
3123	4822 051 10008	CHIP JUMPER 1206		
3124	4822 051 10008	CHIP JUMPER 1206		
3129	4822 051 20008	CHIP JUMPER 0805		
3130	4822 051 10008	CHIP JUMPER 1206		

CHIP RESISTORS

3131	4822 051 10008	CHIP JUMPER 1206		
3132	4822 051 20008	CHIP JUMPER 0805		
3134	4822 051 20223	22k	5%	0,1W
3137	4822 051 20103	10k	5%	0,1W
3140	4822 051 20331	330R	5%	0,1W
3141	4822 051 20563	56k	5%	0,1W
3143	4822 051 20223	22k	5%	0,1W
3144	4822 051 10102	1k	2%	0,25W
3145	4822 051 20222	2k2	5%	0,1W
3146	4822 051 20479	47R	5%	0,1W
3150	4822 051 20472	4k7	5%	0,1W
3151	4822 051 20683	68k	5%	0,1W
3152	4822 051 20471	470R	5%	0,1W
3153	4822 051 20471	470R	5%	0,1W
3162	4822 051 20154	150k	5%	0,1W
3163	4822 051 10008	CHIP JUMPER 1206		
3169	4822 051 20008	CHIP JUMPER 0805		
3172	4822 051 10008	CHIP JUMPER 1206		
3173	4822 051 10008	CHIP JUMPER 1206		
3181	4822 051 10008	CHIP JUMPER 1206		
3183	4822 051 10008	CHIP JUMPER 1206		
3184	4822 051 10008	CHIP JUMPER 1206		
3185	4822 051 10008	CHIP JUMPER 1206		
3186	4822 051 10102	1k	2%	0,25W
3188	4822 051 10008	CHIP JUMPER 1206		
3191	4822 051 20008	CHIP JUMPER 0805		
3192	4822 051 20008	CHIP JUMPER 0805		
3197	4822 051 20472	4k7	5%	0,1W

CAPACITORS

2102	4822 124 40433	47µF	20%	25V
2106	4822 125 60102	30pF		VARIABLE
2107	4822 121 51252	470nF	5%	63V
2123	4822 121 51254	390pF	1%	400V
2125	4822 121 51381	560pF	1%	400V
2128	4822 124 41579	10µF	20%	50V
2129	4822 124 40242	1µF	20%	63V
2130	4822 126 11585	22nF	20%	50V
2133	4822 124 40242	1µF	20%	63V
2138	4822 124 41576	2,2µF	20%	50V
2140	4822 121 51252	470nF	5%	63V
2144	4822 124 40242	1µF	20%	63V
2162	4822 124 41596	22µF	20%	50V

CHIP CAPACITORS

2108	4822 122 33515	82pF	5%	50V
2109	5322 122 31946	27pF	5%	50V
2120	5322 122 32659	33pF	5%	50V
2122	5322 126 10465	3,9nF	10%	63V
2127	4822 122 32927	220nF	10%	63V
2131	4822 122 33325	470nF	20%	50V
2132	4822 122 33325	470nF	20%	50V
2134	4822 122 33128	15nF	10%	63V
2135	4822 122 32927	220nF	10%	63V
2136	4822 122 33128	15nF	10%	63V
2137	4822 122 32927	220nF	10%	63V
2141	4822 122 31947	100nF	20%	50V
2142	4822 122 31947	100nF	20%	50V
2143	4822 122 32927	220nF	10%	63V
2145	4822 122 33575	220pF	5%	50V
2147	4822 122 33575	220pF	5%	50V

CHIP CAPACITO

2148	4822 122
2150	4822 122
2158	4822 122
2160	4822 122
2161	5322 122

ELECTRICAL PARTSLIST TUNER 95 BOARD

CHIP CAPACITORS

2148	4822 122 33575	220pF	5%	50V
2150	4822 122 31947	100nF	20%	50V
2158	4822 122 31947	100nF	20%	50V
2160	4822 122 32139	12pF	5%	63V
2161	5322 122 34123	1nF	10%	50V

KARAOKE BOARD

COMPONENT LAYOUT

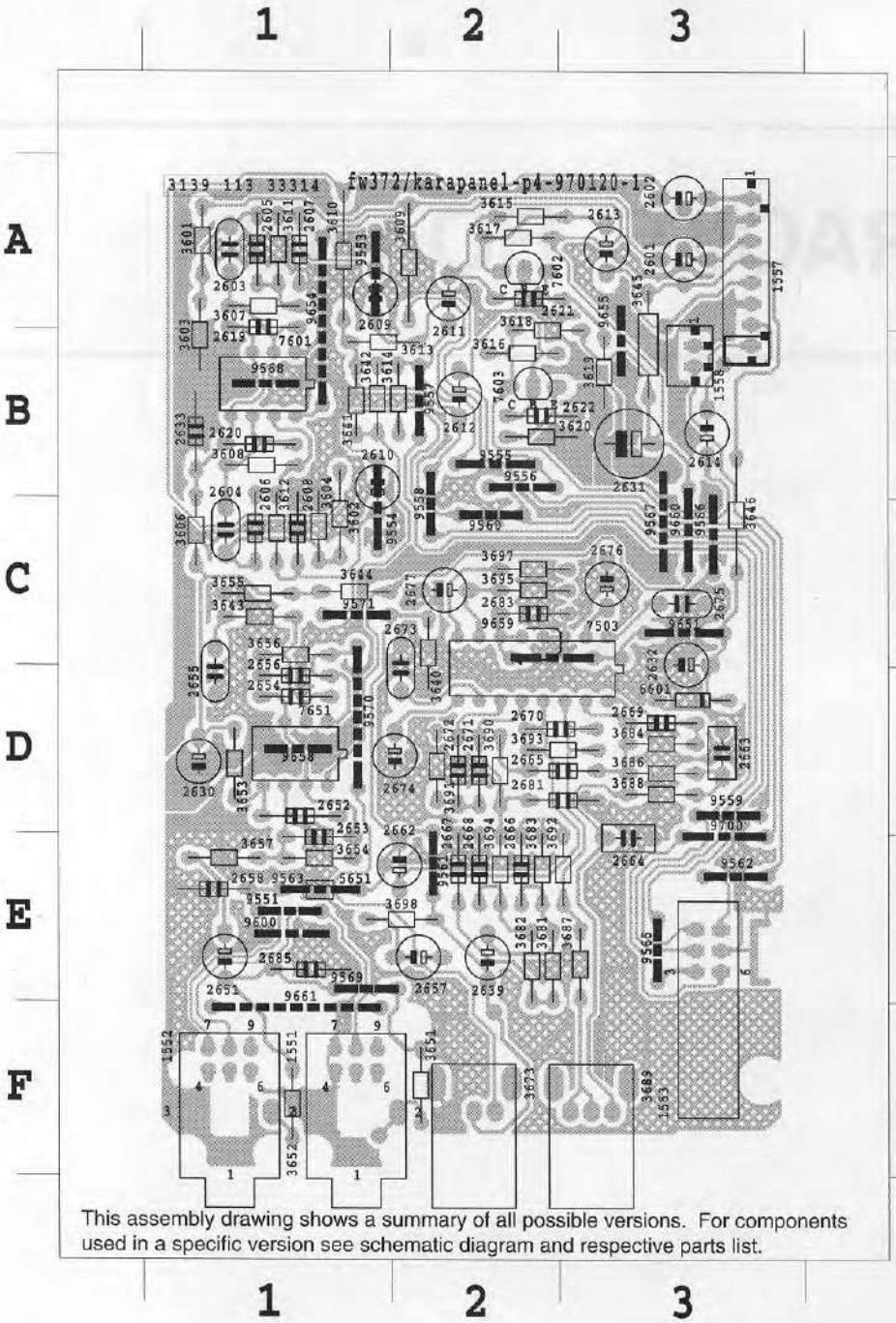

This assembly drawing shows a summary of all possible versions. For components used in a specific version see schematic diagram and respective parts list.

1551 F 1	2677 C 2	3695 C 2
1552 F 1	2681 D 3	3697 C 2
1553 E 3	2683 C 2	3698 E 2
1557 A 3	2685 E 1	5651 E 1
1558 B 3	3601 A 1	6601 D 3
2601 A 3	3602 C 1	7503 D 2
2602 A 3	3603 B 1	7601 B 1
2603 A 1	3604 C 1	7602 A 2
2604 C 1	3606 C 1	7603 B 2
2605 A 1	3607 A 1	7651 D 1
2606 C 1	3608 B 1	9551 E 1
2607 A 1	3609 A 2	9553 A 1
2608 C 1	3610 A 1	9554 C 1
2609 A 1	3611 A 1	9555 B 2
2610 B 1	3612 C 1	9556 B 2
2611 A 2	3613 B 1	9557 B 2
2612 B 2	3614 B 2	9558 C 2
2613 A 3	3615 A 2	9559 D 3
2614 B 3	3616 B 2	9560 C 2
2619 A 1	3617 A 2	9561 E 2
2620 B 1	3618 B 2	9562 E 3
2621 A 2	3619 B 3	9563 E 1
2622 B 2	3620 B 2	9565 E 3
2630 D 1	3640 C 2	9566 C 3
2631 B 3	3641 B 1	9567 C 3
2632 C 3	3642 B 1	9568 B 1
2633 B 1	3643 C 1	9569 E 1
2639 E 2	3644 C 1	9570 D 1
2651 E 1	3645 B 3	9571 C 1
2652 D 1	3646 C 3	9600 E 1
2653 E 1	3651 F 2	9651 C 3
2654 D 1	3652 F 1	9654 A 1
2655 D 1	3653 D 1	9655 B 3
2656 D 1	3654 E 1	9658 D 1
2657 E 2	3655 C 1	9659 C 2
2658 E 1	3656 C 1	9660 C 3
2662 E 2	3657 E 1	9661 F 1
2663 D 3	3673 F 2	9700 E 3
2664 E 3	3681 E 2	
2665 D 3	3682 E 2	
2666 E 2	3683 E 2	
2667 E 2	3684 D 3	
2668 E 2	3686 D 3	
2669 D 3	3687 E 3	
2670 D 3	3688 D 3	
2671 D 2	3689 F 3	
2672 D 2	3690 D 2	
2673 D 2	3691 D 2	
2674 D 2	3692 E 3	
2675 C 3	3693 D 3	
2676 C 3	3694 E 2	

KARAOKE CIRCUIT

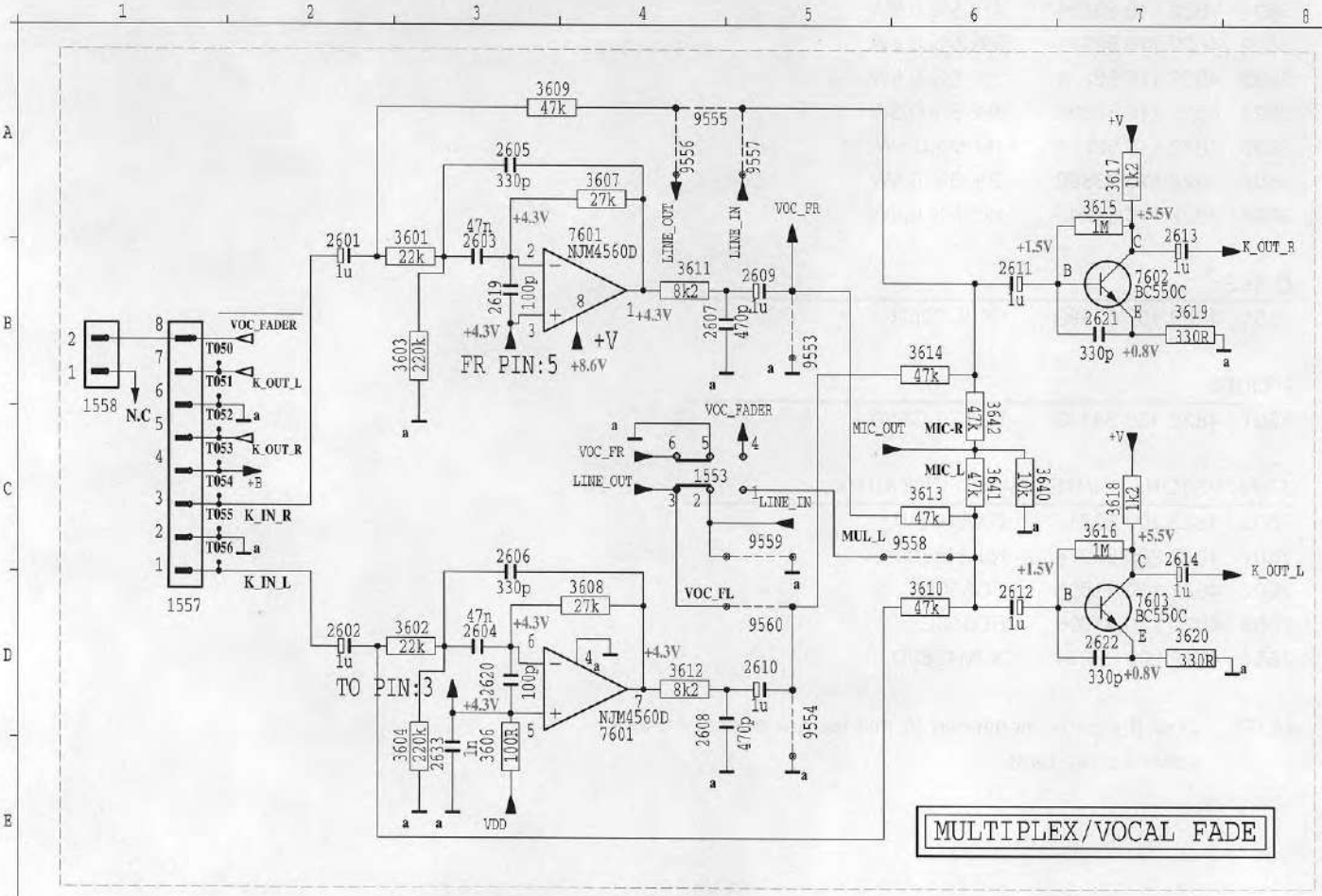

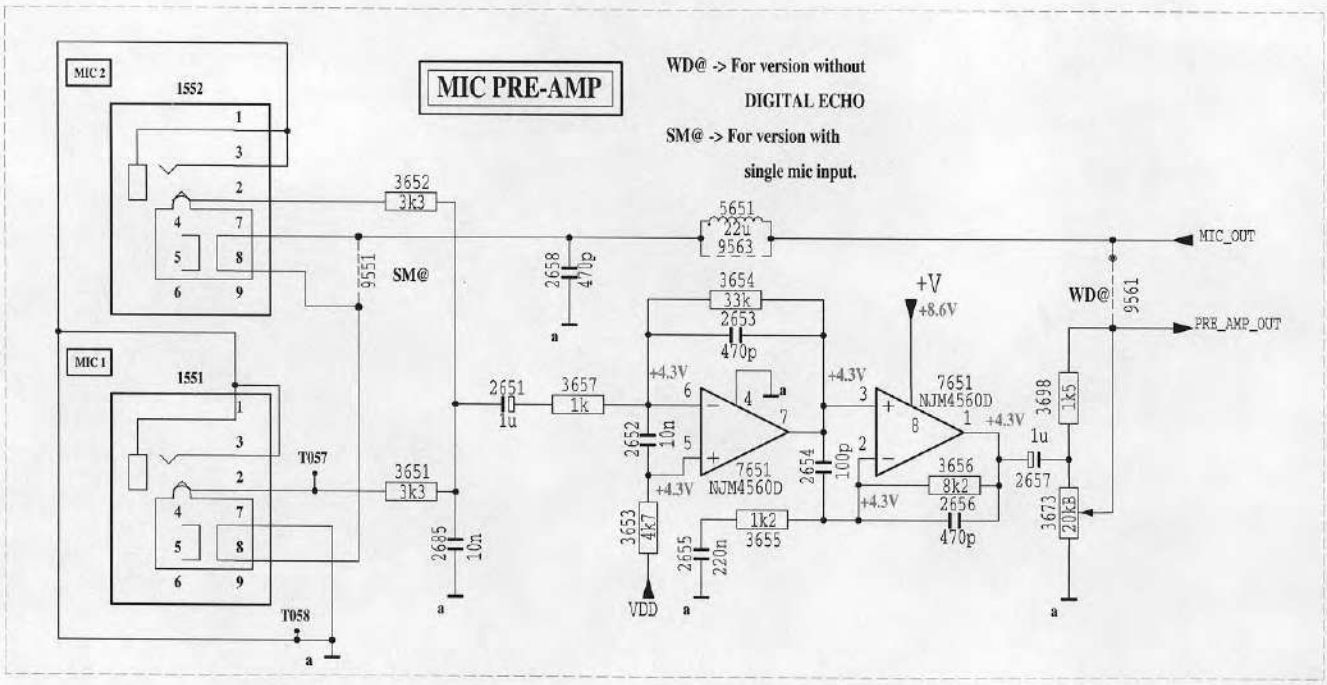

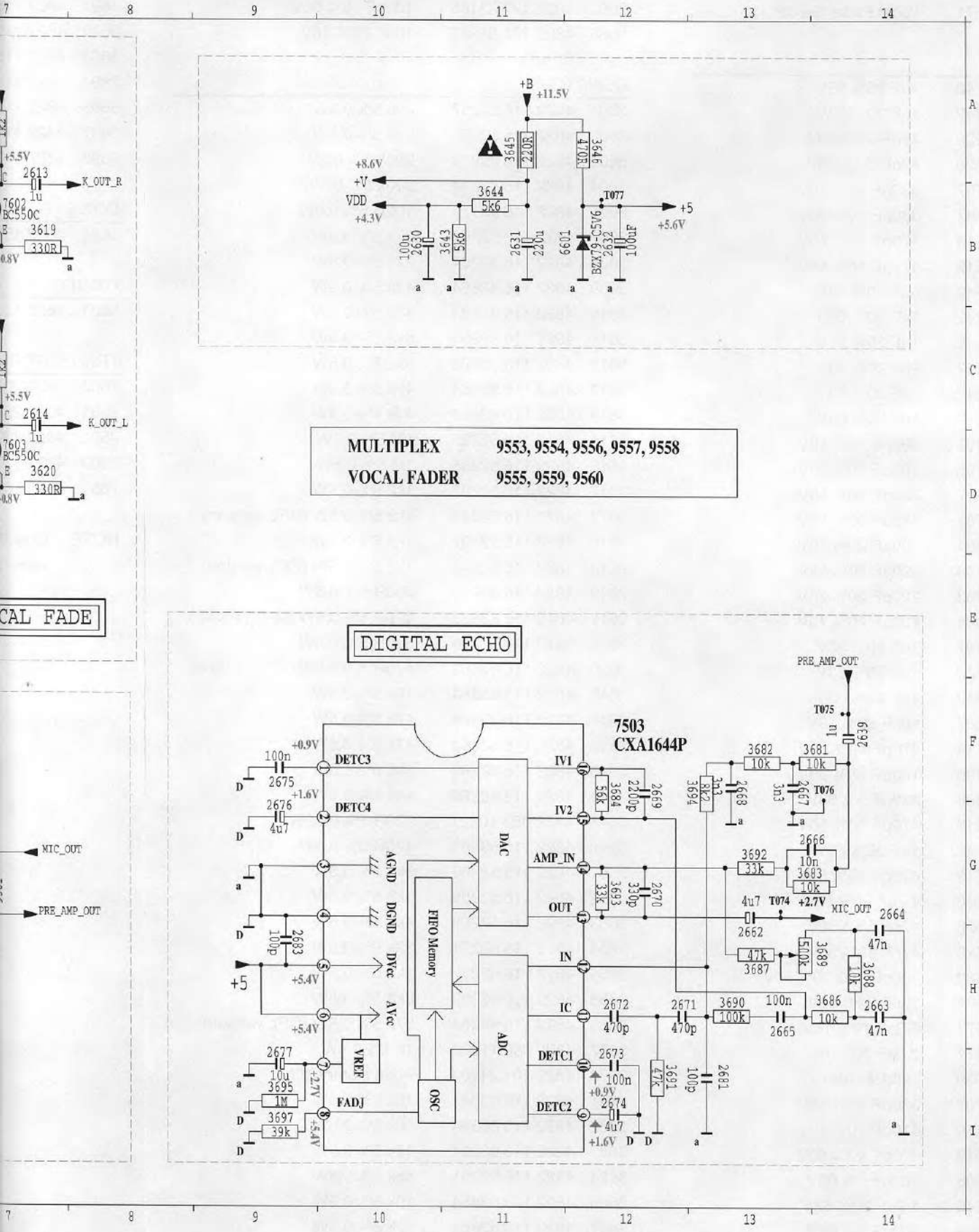

1551	H 2	3695	I 9
1552	F 2	3697	I 9
1553	C 4	3698	H 6
1557	D 1	5651	G 5
1558	B 1	6601	B12
2601	B 2	7503	F12
2602	D 2	7601	A 4
2603	B 3	7601	D 4
2604	D 3	7602	B 7
2605	A 3	7603	D 7
2606	C 3	7651	H 6
2607	B 4	7651	H 5
2608	D 4	9551	G 2
2609	B 5	9553	B 5
2610	D 5	9554	D 5
2611	B 6	9555	A 4
2612	D 6	9556	A 4
2613	A 7	9557	A 5
2614	C 7	9558	C 6
2619	B 3	9559	C 5
2620	D 3	9560	D 5
2621	B 7	9561	G 7
2622	D 7	9563	G 5
2630	B10		
2631	B11		
2632	B12		
2633	E 3		
2639	F14		
2651	H 3		
2652	H 4		
2653	G 5		
2654	H 5		
2655	I 4		
2656	H 6		
2657	H 6		
2658	G 4		
2662	H13		
2663	H14		
2664	G14		
2665	H13		
2666	G14		
2667	F13		
2668	F13		
2669	F12		
2670	G12		
2671	H12		
2672	H12		
2673	I12		
2674	I12		
2675	F 9		
2676	G 9		
2677	I 9		
2681	I13		
2683	H 9		
2685	I 3		
3601	B 3		
3602	D 3		
3603	B 3		
3604	E 3		
3606	E 3		
3607	A 4		
3608	D 4		
3609	A 3		
3610	D 6		
3611	B 4		
3612	D 4		
3613	C 6		
3614	B 6		
3615	A 7		
3616	C 7		
3617	A 7		
3618	C 7		
3619	B 7		
3620	D 7		
3640	C 6		
3641	C 6		
3642	C 6		
3643	B11		
3644	B11		
3645	A11		
3646	A12		
3651	H 3		
3652	G 3		
3653	I 4		
3654	G 5		
3655	I 5		
3656	H 6		
3657	H 4		
3673	H 5		
3681	F14		
3682	F13		
3683	G13		
3684	F12		
3686	H14		
3687	H13		
3688	H14		
3689	H14		
3690	H13		
3691	I12		
3692	G13		
3693	G12		
3694	F12		

ELECTRICAL PARTS LIST - KARAOKE BOARD

MISCELLANEOUS

1551	4822 267 40898	Mic Socket
1552	4822 267 40898	Mic Socket
1553	4822 276 12571	Vocal Fader Switch

CAPACITORS

2601	4822 124 40242	1µF 20% 63V
2602	4822 124 40242	1µF 20% 63V
2603	4822 121 43526	47nF 5% 250V
2604	4822 121 43526	47nF 5% 250V
2605	4822 126 12787	330pF 10% 50V
2606	4822 126 12787	330pF 10% 50V
2607	4822 122 33519	470pF 10% 50V
2608	4822 122 33519	470pF 10% 50V
2609	4822 124 40242	1µF 20% 63V
2610	4822 124 40242	1µF 20% 63V
2611	4822 124 40242	1µF 20% 63V
2612	4822 124 40242	1µF 20% 63V
2613	4822 124 40242	1µF 20% 63V
2614	4822 124 40242	1µF 20% 63V
2619	4822 122 33195	100pF 10% 50V
2620	4822 122 33195	100pF 10% 50V
2621	4822 126 12787	330pF 10% 50V
2622	4822 126 12787	330pF 10% 50V
2630	4822 124 41584	100µF 20% 10V
2631	4822 124 80144	220µF 20% 25V
2631	4822 124 22263	220µF 20% 25V
2632	4822 124 41584	100µF 20% 10V
2633	4822 122 33197	1nF 10% 50V
2639	4822 124 40242	1µF 20% 63V
2651	4822 124 40242	1µF 20% 63V
2652	4822 121 51387	10nF 20% 16V
2653	4822 122 33519	470pF 10% 50V
2654	4822 122 33195	100pF 10% 50V
2655	4822 121 42408	220nF 5% 63V
2656	4822 122 33519	470pF 10% 50V
2657	4822 124 40242	1µF 20% 63V
2658	4822 122 33519	470pF 10% 50V
2662	4822 124 40246	4,7µF 20% 63V
2663	4822 121 43526	47nF 5% 250V
2664	4822 121 43526	47nF 5% 250V
2665	4822 126 12882	100nF +80-20% 50V
2666	4822 121 51387	10nF 20% 16V
2667	4822 122 10577	3,3nF 10% 16V
2668	4822 122 10577	3,3nF 10% 16V
2669	4822 126 12339	2200pF 10%
2670	4822 126 12787	330pF 10% 50V
2671	4822 122 33519	470pF 10% 50V
2672	4822 122 33519	470pF 10% 50V
2673	5322 121 42386	100nF 5% 63V
2674	4822 124 40246	4,7µF 20% 63V
2675	5322 121 42386	100nF 5% 63V
2676	4822 124 40246	4,7µF 20% 63V
2677	4822 124 41579	10µF 20% 50V
2681	4822 122 33195	100pF 10% 50V
2683	4822 122 33195	100pF 10% 50V
2685	4822 121 51387	10nF 20% 16V

RESISTORS

3601	4822 116 52257	22k 5% 0,5W
3602	4822 116 52257	22k 5% 0,5W
3603	4822 116 83874	220k 5% 0,5W
3604	4822 116 83874	220k 5% 0,5W
3606	4822 116 52175	100R 5% 0,5W
3607	4822 116 52264	27k 5% 0,5W
3608	4822 116 52264	27k 5% 0,5W
3609	4822 116 83884	47k 5% 0,5W
3610	4822 116 83884	47k 5% 0,5W
3611	4822 116 52303	8k2 5% 0,5W
3612	4822 116 52303	8k2 5% 0,5W
3613	4822 116 83884	47k 5% 0,5W
3614	4822 116 83884	47k 5% 0,5W
3615	4822 116 52235	1M 5% 0,5W
3616	4822 116 52235	1M 5% 0,5W
3617	4822 116 52207	1k2 5% 0,5W
3617	4822 116 52249	1k8 5% 0,5W (DPL version)
3618	4822 116 52207	1k2 5% 0,5W
3618	4822 116 52249	1k8 5% 0,5W (DPL version)
3619	4822 116 52219	330R 5% 0,5W
3619	4822 116 83883	470R 5% 0,5W (DPL version)
3620	4822 116 52219	330R 5% 0,5W
3620	4822 116 83883	470R 5% 0,5W (DPL version)
3640	4822 116 83864	10k 5% 0,5W
3641	4822 116 83884	47k 5% 0,5W
3642	4822 116 83884	47k 5% 0,5W
3643	4822 116 52289	5k6 5% 0,5W
3644	4822 116 52289	5k6 5% 0,5W
3645	4822 052 10221	⚠ 220R 5% 0,33W
3646	4822 116 83883	470R 5% 0,5W
3651	4822 116 52269	3k3 5% 0,5W
3652	4822 116 52269	3k3 5% 0,5W
3653	4822 116 52283	4k7 5% 0,5W
3654	4822 116 52271	33k 5% 0,5W
3655	4822 116 52207	1k2 5% 0,5W
3656	4822 116 52303	8k2 5% 0,5W
3656	4822 116 52264	27k 5% 0,5W (DPL version)
3657	4822 050 11002	1k 1% 0,4W
3673	4822 101 21204	Potm Rotary 20kB
3681	4822 116 83864	10k 5% 0,5W
3682	4822 116 83864	10k 5% 0,5W
3683	4822 116 83864	10k 5% 0,5W
3684	4822 116 52291	56k 5% 0,5W
3686	4822 116 83864	10k 5% 0,5W
3687	4822 116 83884	47k 5% 0,5W
3688	4822 116 83864	10k 5% 0,5W

3689	4822 10
3690	4822 11
3691	4822 11
3692	4822 11
3693	4822 11
3694	4822 11
3695	4822 11
3697	4822 11
3698	4822 11

COILS

5651	4822 15

DIODES

6601	4822 13

TRANSISTORS

7503	4822 20
7601	4822 20
7602	4822 13
7603	4822 13
7651	4822 20

NOTE: Only t
service

ELECTRICAL PARTS LIST - KARAOKE BOARD

3689	4822 101 11326	Potm Rotary 500k
3690	4822 116 52234	100k 5% 0,5W
3691	4822 116 83884	47k 5% 0,5W
3692	4822 116 52271	33k 5% 0,5W
3693	4822 116 52271	33k 5% 0,5W
3694	4822 116 52303	8k2 5% 0,5W
3695	4822 116 52235	1M 5% 0,5W
3697	4822 116 83882	39k 5% 0,5W
3698	4822 116 52243	1k5 5% 0,5W

COILS

5651	4822 157 52983	COIL 22µH

DIODES

6601	4822 130 34173	BZX79-C5V6

TRANSISTORS & INTEGRATED CIRCUITS

7503	4822 209 33717	CXA1644P
7601	4822 209 83274	NJM4560D
7602	4822 130 41096	BC550C
7603	4822 130 41096	BC550C
7651	4822 209 83274	NJM4560D

NOTE: Only the parts mentioned in this list are normal service spare parts.

ETF2 TAPE MODULE

TABLE OF CONTENTS

Tapedeck wiring (Double deck)

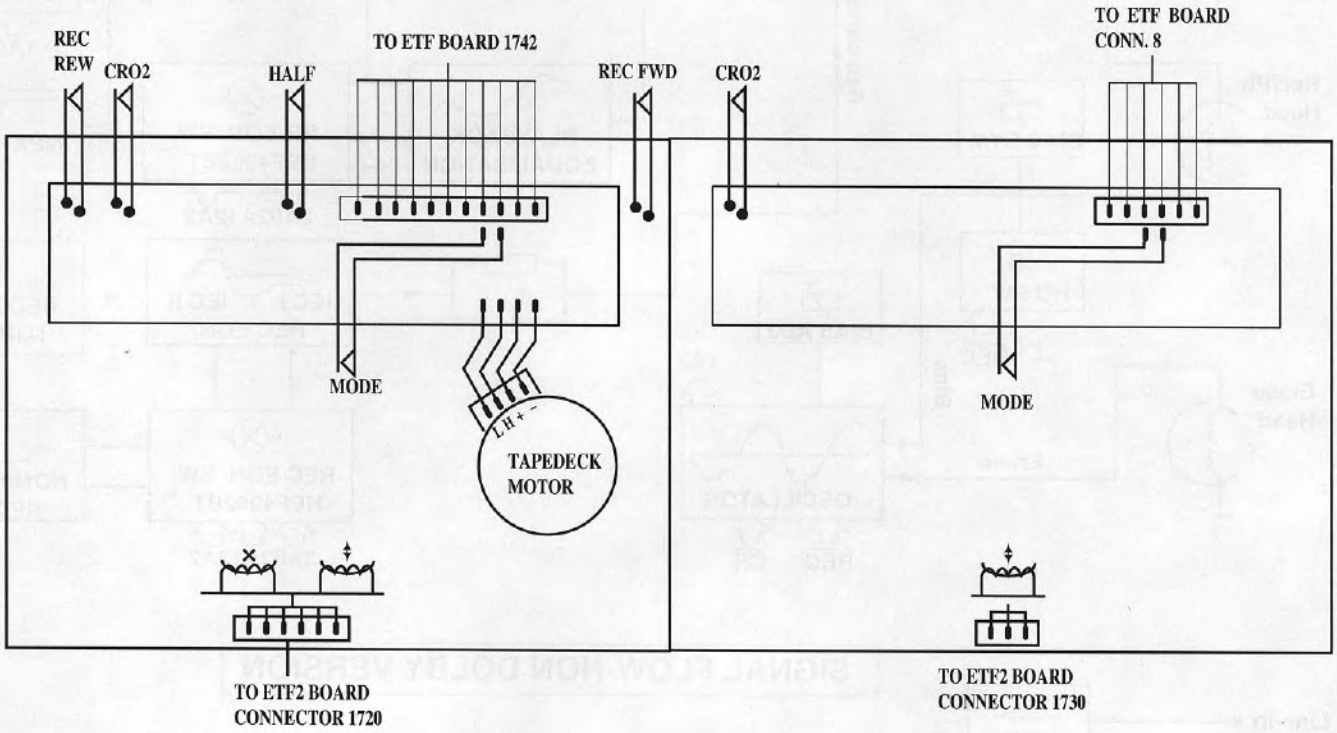

ETF 2 BLOCK DIAGRAM

SIGNAL FLOW-DOLBY VERSION

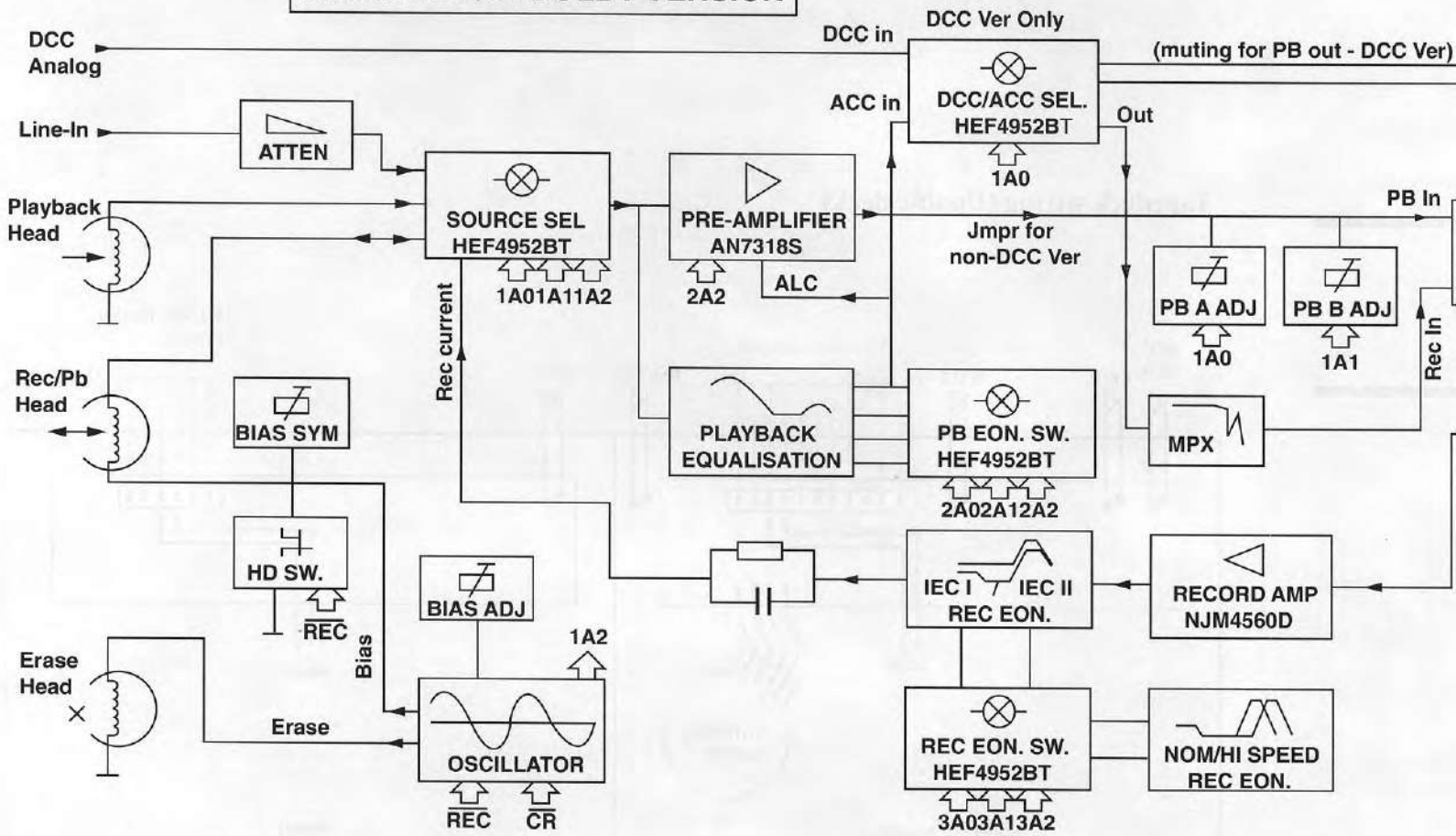

SIGNAL FLOW-NON DOLBY VERSION

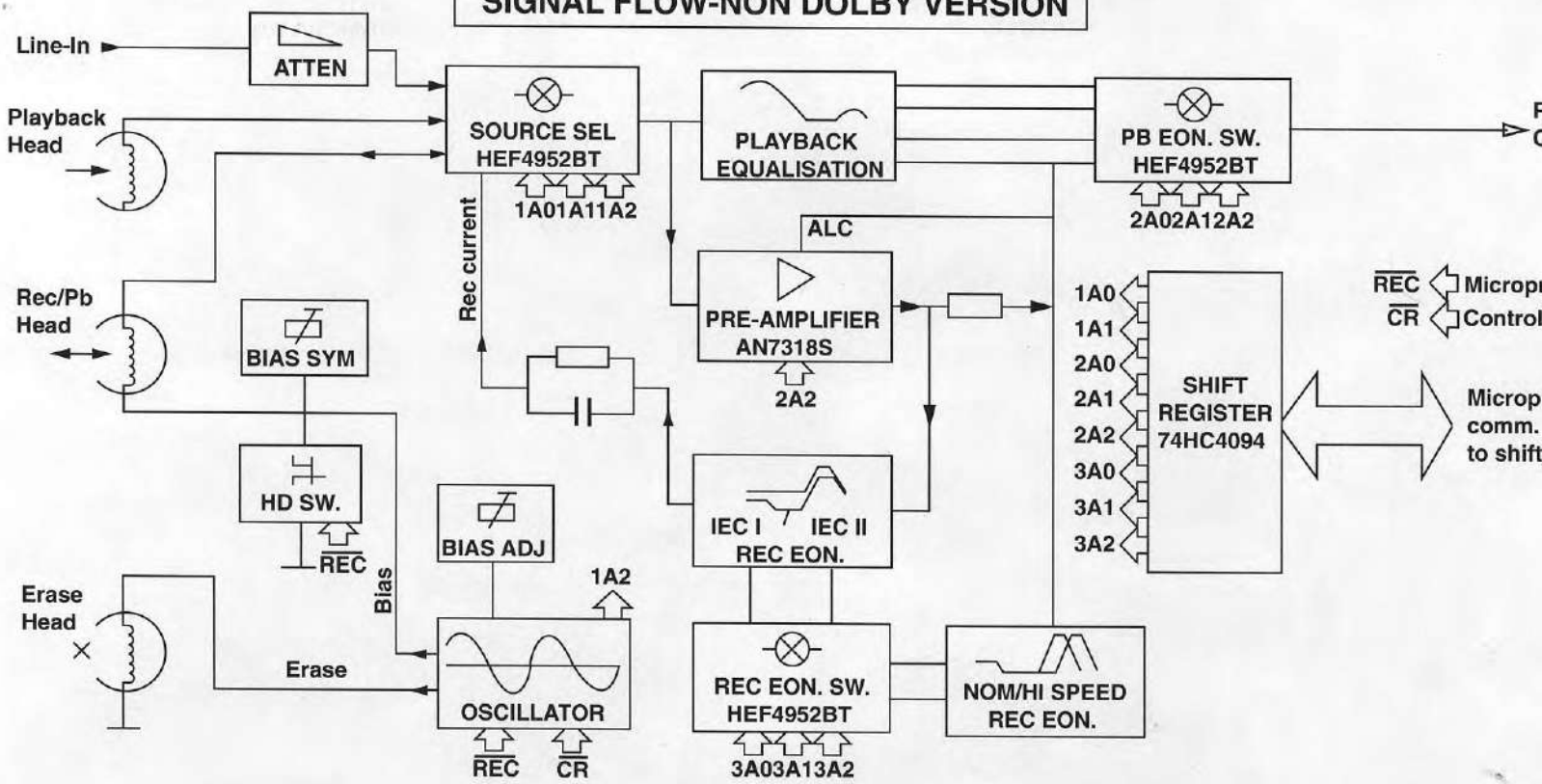

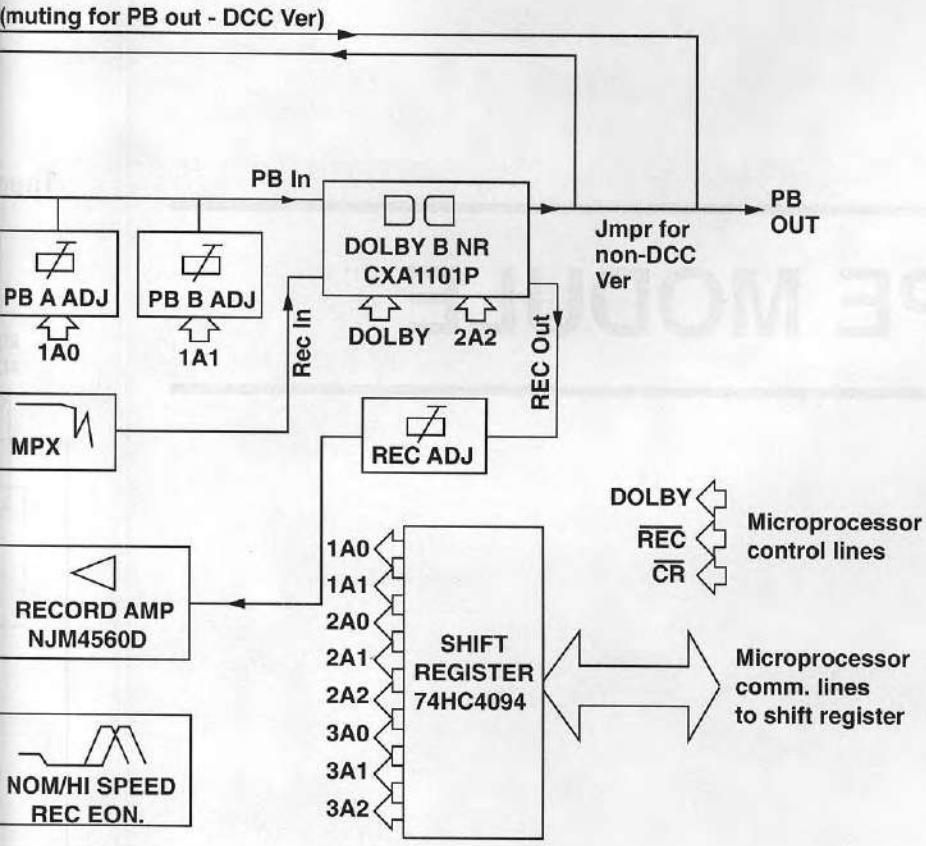
(muting for PB out - DCC Ver)
PB In
DOLBY B NR
CXA1101P
Jmpr for
non-DCC
Ver
PB
OUT
PB A ADJ
PB B ADJ
1A0
1A1
DOLBY
2A2
Rec In
REC Out
MPX
REC ADJ
DOLBY
REC
CR
Microprocessor
control lines
RECORD AMP
NJM4560D
1A0
1A1
2A0
2A1
2A2
3A0
3A1
3A2
SHIFT
REGISTER
74HC4094
Microprocessor
comm. lines
to shift register
NOM/HI SPEED
REC EON.

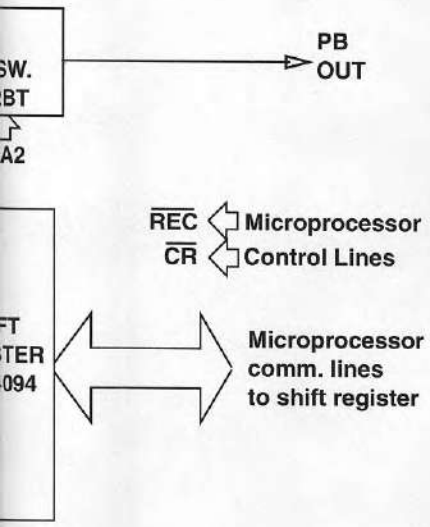
PB
OUT
REC
CR
Microprocessor
Control Lines
Microprocessor
comm. lines
to shift register

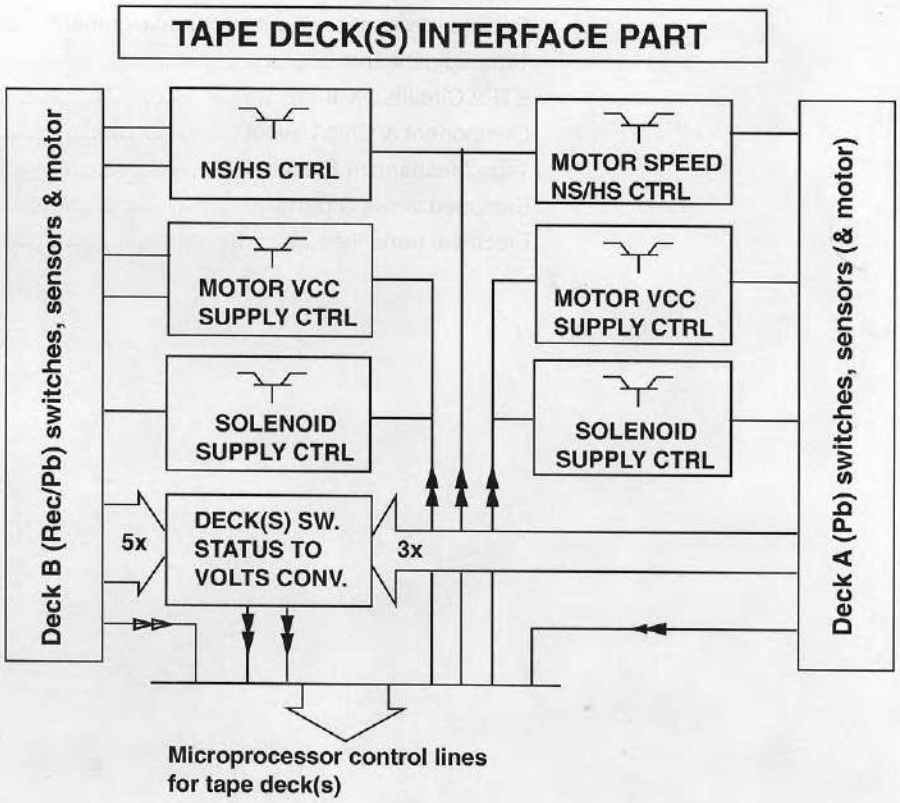
TAPE DECK(S) INTERFACE PART
Deck B (Rec/Pb) switches, sensors & motor
NS/HS CTRL
MOTOR VCC
SUPPLY CTRL
SOLENOID
SUPPLY CTRL
5x
DECK(S) SW.
STATUS TO
VOLTS CONV.
3x
MOTOR SPEED
NS/HS CTRL
MOTOR VCC
SUPPLY CTRL
SOLENOID
SUPPLY CTRL
Deck A (Pb) switches, sensors (& motor)
Microprocessor control lines
for tape deck(s)

GENERAL DESCRIPTION

FEATURES

The ETF-2 is a family of logic controlled, electronically switched tape function modules. Each module comprises a logic controlled tape deck with attached pcb housing the tape pre-amplifier, recording and switching circuitry, and tape deck interface circuitry.

The following features are available as options:
single / double tape-deck applications
auto-reverse / single way deck options
single / double motor options for double deck
IEC I & IEC II tape types auto selection for playback & recording
Dolby B type Noise Reduction
line-in recording with pilot suppression
tape dubbing at normal & high speed (for double deck applications)
automatic recording level control
software controlled full auto reverse permutations
opto-reflector disc for counter pulses & end-of-tape (EOT) auto-stop
input for DCC deck analog playpack output

NOTATIONS & ABBREVIATIONS USED IN THIS DOCUMENT

Gnd x	Ground x
S/A	Sub-assy
FE	Ferro (IEC type I)
CR	Chrome (IEC type II)
NR	Noise Reduction
PB	Playback
REC	Record
NSD	Normal speed dubbing
HSD	High speed dubbing
DD	Double Deck
SD	Single Deck
SM	Single Motor
DM	Double Motor
ND	Non Dolby
DB	Dolby B

PC board variations	**ND/SD**	**ND/DD/FF**	**DB/DD/FR**	**DB/DD/FF**
12NCs (3139 118 ...)	... 85990	... 88910	... 88750	... 89960
Deck configuration	Single	Double	Double	Double
Motor configuration	Single	Single	Single	Single
Auto Fe/Cr02 selection	Yes	Yes	Yes	Yes
Dolby B	No	No	Yes	Yes
19kHz suppression	No	No	Yes	Yes
High speed dubbing	No	Yes	Yes	Yes
Audio I/P for DCC sets	No	No	No	No

Note: ND - Non Dolby, DB - Dolby B
SD - Single Deck, DD - Double Deck
FF - Playback + Rec/Playback
FR - Playback + Auto-reverse Rec/Playback

CONNE

CONNE

CONNE

CONNE

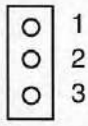

CONNE

CONNE

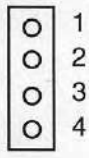

CONNE

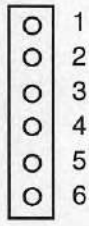

n module
rding and

CONNECTORS ASSIGNMENTS:

CONNECTOR 1701 — AF SIGNAL & SUPPLY CONNECTIONS

1	-CMOS	Negative d.c. supply (-9V) for CMOS ICs
2	TAPE-L	Playback output left
3	TAPE-R	Playback output right
4	+12V	D.C. supply (+12V) for AF electronics
5	GND A	AF Ground
6	REC-L	Record input left
7	REC-R	Record input right

CONNECTOR 1702 — CONTROL LINES FOR AF ELECTRON ***(For NON-Dolby versions only)***

1	STROBE	HEF4094BT shift register Strobe line
2	DATA	HEF4094BT shift register Data line
3	CLK	HEF4094BT shift register Clock line
4	GND P	Control & Oscillator Ground
5	REC'	Record on/off control (+5V=Pb; 0V=Rec)
6	CRO2'	CrO2 tape recording control (+5V=Fe; 0V=Cr)

CONNECTOR 1705 — DCC DECK CONNECTORS ***(For versions with inputs for DCC Analog Playback)***

1	ACC L	DCC Deck analog playback left
2	GND A	AF Ground
3	ACC R	DCC Deck analog playback right

CONNECTOR 1706 — CONTROL LINES FOR AS ELECTRON ***(For versions with Dolby only)***

1	STROBE	HEF4094BT shift register Strobe line
2	DATA	HEF4094BT shift register Data line
3	CLK	HEF4094BT shift register Clock line
4	GND P	Control & Oscillator Ground
5	REC'	Record on/off control (+5V=Pb; 0V=Rec)
6	CRO2'	CrO2 tape recording control (+5V=Fe; 0V=Cr)
7	DOLBY'	Dolby NR on/off control (option) (+5V=off; 0V=On)

CONNECTOR 1711 — BIAS CURRENT SENSO ***(For Testing purpose only)***

1	BIAS L+	Bias current test connector - left channel
2	BIAS L-	Bias current test connector - left channel
3	BIAS R+	Bias current test connector - right channel
4	BIAS R-	Bias current test connector - right channel

CONNECTOR 1720 — DECK B HEADS CONNECTON ***(JQ top-type)***

1	B R/P HD L+	R/P Head left channel positive
2	B R/P HD L-	R/P Head left channel negative
3	B R/P HD R+	R/P Head right channel positive
4	B R/P HD R-	R/P Head right channel negative
5	ERASE HEAD	Erase Head
6	GND P	Erase Head ground

CONNECTOR 1730 — DECK A HEAD CONNECTIONS ***(For Double Deck versions only)***

1	A PB HD R+	Pb Head right channel positive
2	GND A	Pb Head return ground shield
3	A PB HD L+	Pb Head left channel positive

5.2 TAPE DECK INTERFACES

CONNECTOR 1703 — MOTOR SUPPLY LINES ***(PH side-type)***

1	+MOTOR	D.C. supply (+12V) for tape deck motor & solenoid
2	GND P	Motor Ground

CONNECTOR 1704 — CONTROL LINES FOR TAPE DECK OPERATE ***(PH side-type)***
(For single Deck versions only)

1	GND	Ground for deck sensing switches network (provision)
2	+5V	D.C. supply (+5V) for deck status ADC network (referenced to micro-p)
3	AD1	Deck B sensing switches output voltage
4	EOT B	Deck B EOT/counter pulse
5	SOLB/MOTB*	Deck B motor/solenoid control (tri-state; see table below)
6	AD2	Deck A sensing switches output voltage

CONNECTOR 1707 — CONTROL LINES FOR TAPE DECK OPERATE ***(PH side-type)***
(For Double Deck versions only)

1	GND	Ground for deck sensing switches network (provision)
2	+5V	D.C. supply (+5V) for deck status ADC network (referenced to micro-p)
3	AD1	Deck B sensing switches output voltage
4	EOT B	Deck B EOT/counter pulse
5	SOLB/MOTB*	Deck B motor/solenoid control (tri-state; see table below)
6	AD2	Deck A sensing switches output voltage
7	EOT A	Deck A EOT/counter pulse
8	SOLA/MOTA*	Deck A motor/solenoid control (tri-state; see table)
9	AD3	Deck A sensing switches output voltage
10	NS/HS	Normal/high speed toggle (+5V=HS; 0V=NS)

* motor/solenoid tristate ctrl lines

	mot	sol
0V	on	on
Hi-Z	on	off
5V	off	off

CONNECTOR 1741 — DECK B CONTROL INTERFACE
(For Single Deck versions only)

1	GND	Deck/Motor ground
2	MODE	Mode switch (head engagement)
3	Vcc	Deck/Motor supply
4	SOL B	Solenoid supply
5	PHOTO B	Photo sensor output (tape movement indication)
6	CrO2	Chrome tape detection switch
7	HALF	Half switch (cassette present detection, provision only)
8	REC FWD	Record tab protection status switch (forward)
9	REC RVS	Record tab protection status switch (reverse)

CONNECTOR

1	H
2	L
3	C
4	M
5	V
6	S
7	F
8	C
9	H
10	F
11	F

CONNECTOR

1	H
2	C
3	F
4	S
5	V
6	M
7	C

CONNECTOR

1	H
2	C
3	F
4	S
5	V
6	M
7	C

1	L
2	H

SUPPLY
+12V
+CMOS
+MOTOR
+5V

CONNECTOR 1742 — DECK B CONTROL INTERFACE
(For Double Deck versions only)

O	1	H	H pin for motor
O	2	L	L pin for motor
O	3	GND	Deck/Motor ground
O	4	MODE	Mode switch (head engagement)
O	5	Vcc	Deck/Motor supply
O	6	SOL B	Solenoid supply
O	7	PHOTO B	Photo sensor output (tape movement indication)
O	8	CrO2	Chrome tape detection switch
O	9	HALF	Half switch (cassette present detection, provision only)
O	10	REC FWD	Record tab protection status switch (forward)
O	11	REC RVS	Record tab protection status switch (reverse)

CONNECTOR 1743 — DECK A CONTROL INTERFAC ***(XH wire-type on dip-mate item 8)***
(For Double Deck/Single Motor versions only)

O	1	HALF	Half switch (cassette present detection, provision only)
O	2	CrO2	Chrome tape detection switch
O	3	PHOTO A	Photo sensor output (tape movement indication)
O	4	SOL A	Solenoid supply
O	5	Vcc	Deck/Motor supply
O	6	MODE	Mode switch (head engagement)
O	7	GND	Deck/Motor ground

CONNECTOR 1744 — DECK A CONTROL INTERFAC ***(XH wire-type on dip-mate item 8 & 9)***
(For Double Deck/Double Motor versions only)

O	1	HALF	Half switch (cassette present detection, provisiion only)
O	2	CrO2	Chrome tape detection switch
O	3	PHOTO A	Photo sensor output (tape movement indication)
O	4	SOL A	Solenoid supply
O	5	Vcc	Deck/Motor supply
O	6	MODE	Mode switch (head engagement)
O	7	GND	Deck/Motor ground

O	1	L	L pin for motor
O	2	H	H pin for motor

SUPPLY	DESCRIPTION	VOLTAGE
+12V	d.c. supply for AF electronics	+12V
+CMOS	d.c. supply for CMOS ICs	-9V
+MOTOR	d.c. supply for tape deck motor and solenoid	+12V
+5V	d.c. supply for deck status ADC network	+5V

General

	TEST CASSETTE	RECORDER MODE	MEASURE ON	READ ON	ADJUST with	ADJUST to
ADJUST MOTOR SPEED						
HIGH SPEED	SBC420 (4822 397 30071) 3150Hz	DUBBING	10 or 11 LEFT RIGHT	frequency counter	3682	5040Hz±0.5%
NORMAL		PLAY			3684	3150Hz±0.5%
CHECK WOW & FLUTTER (DECK1 AND DECK2)						
WOW FLUTTER	SBC420 (4822 397 30071) 3150Hz	PLAY	10 or 11 LEFT RIGHT	W&F-meter	check only	≤0.6 % unwtd.
ADJUST AZIMUTH (DECK1 AND DECK2)						
NORM. DIRECTION	SBC420 (4822 397 30071) 10kHz	PLAY FWD	10 or 11 LEFT RIGHT	mV-meter	left hand screw	max. output level & left=right
REV. DIRECTION		PLAY REV			right hand screw	

Playback

	TEST CASSETTE	RECORDER MODE	MEASURE ON	READ ON	ADJUST with	ADJUST to
ADJUST DOLBY PLAYBACK LEVEL						
DECK1	DOLBY REF. (4822 397 30271) 200nWb/m	PLAY	10 or 11 LEFT RIGHT	mV-meter	3641(L), 3642(R)	535mV ±0.5dB
DECK2					3635(L), 3636(R)	
CHECK PLAYBACK FREQUENCY RESPONSE (DECK1 AND DECK2)						
PB FREQU. RESP.	SBC420 (4822 397 30071)	PLAY	10 or 11 LEFT RIGHT	mV-meter	mV-meter	limits see fig.1

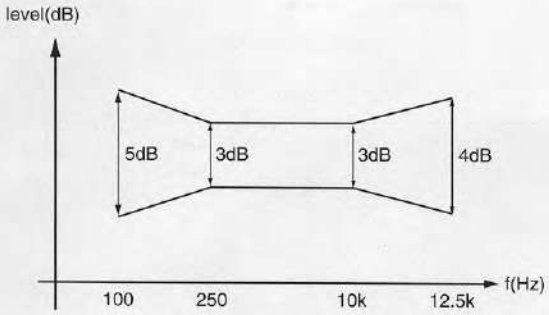

fig. 1

Record

PRE-A
CrO 2
FERRO
CHECK
37mV a 100Hz, 10kHz,
100mV 1kHz
Remark
ADJUS
AUX-IN
1) Rem
RECO
Remark

Note :

T	to
040Hz±0.5%	
150Hz±0.5%	
±0.6 % unwtd.	
ax. output level & left=right	

T	to
35mV ±0.5dB	
mits see fig.1	

Recording

	TEST CASSETTE	RECORDER MODE	MEASURE ON	READ ON	ADJUST with	ADJUST to
PRE-ADJUST BIAS AND BIAS-SYMMETRY						
CrO 2	CrO 2	RECORD	12 or 13 LEFT RIGHT	mV-meter	3773 & 3785	110mV & left=right
FERRO	FERRO	RECORD			check only	71mV ±0.5dB
CHECK OVERALL FREQUENCY RESPONSE AND DISTORTION						
37mV at AUX-IN 100Hz,250Hz,1kHz 10kHz,12.5kHz	CrO 2	RECORD				
	RECORDED CASSETTE	PLAY	10 or 11 LEFT RIGHT	mV-meter	check only	limits see fig.2
100mV at AUX-IN, 1kHz	CrO 2	RECORD				
	RECORDED CASSETTE	PLAY	10 or 11 LEFT RIGHT	THD-meter	check only	≤3%
Remark: If high frequencies are not within limits, decrease bias and remeasure. If distortion is too high increase bias and remeasure.						
ADJUST DOLBY RECORD LEVEL						
AUX-IN	CrO 2	RECORD	10 or 11 LEFT RIGHT	mV-meter	LF-generator	330Hz 170mV
	CrO 2	RECORD	12 or 13 LEFT RIGHT	mV-meter	3655 & 3556	5mV 1)
1) Remark: Use low pass filter to attenuate the bias component, or short-circuit base of 7783 to ground.						
RECORD LEVEL CHECK						
	RECORDED CASSETTE	PLAY	10 or 11 LEFT RIGHT	mV-meter	check only	330Hz 170mV ±0.5dB
Remark: If measured value is out of limit, re-adjust record level and remeasure.						

Note : The adjustment and check table are for all options/variants. For your exact application , please refer to the Options/Variants Table.

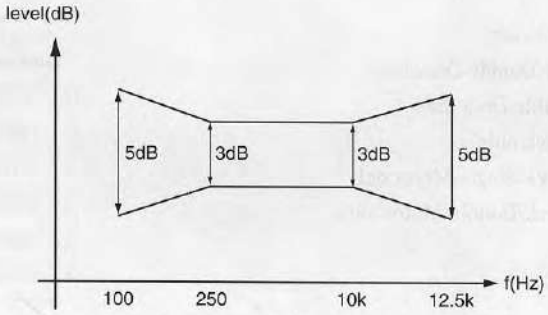

fig. 2

ETF2 CIRCUIT I

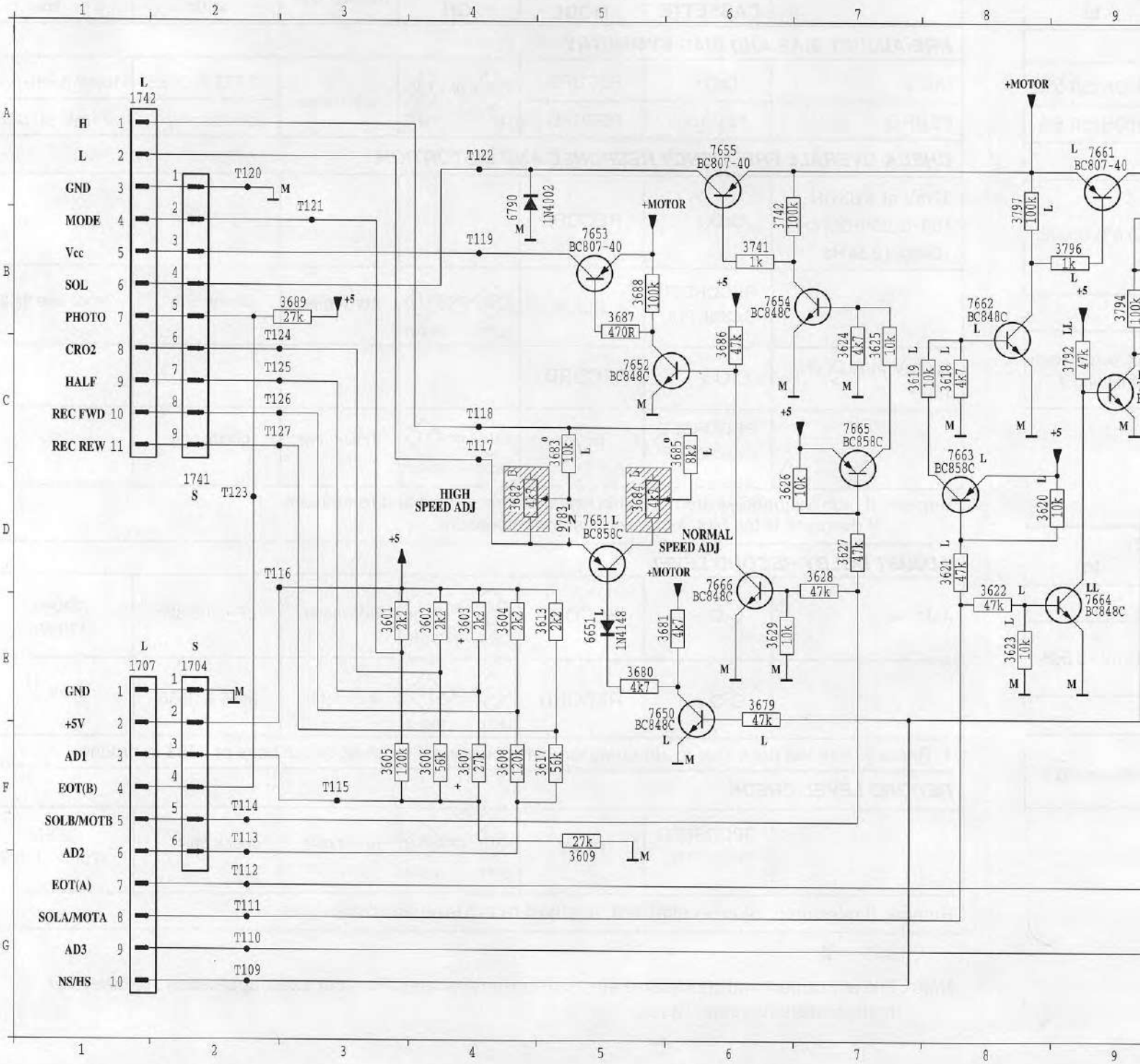

- **S** Required for sets with Single-Deck only
- **N** Required for sets with Non-Dolby/Double-Deck only
- **D** Required for sets with Dolby/Double-Deck only
- **L** Required for sets with Double-Deck only
- **M** Required for sets with Double-Deck/Single-Motor only
- **LL** Required for sets with Double-Deck/Double-Motor only
- **+** For provision only

*** For Variants detection during PCB testing :**

Values for Resistor 3699

1	ND/SD	1k
2	DB/SD	2k2
3	ND/DD/FR	3k3
4	DB/DD/FR	5k6
5	DB/DD/RR	5k6
6	DB/DD/DM	6k8

o For Dolby variant,

3683	DB/DD/FR	8k2
	DB/DD/FF	6k8
3685	DB/DD/FR	10k

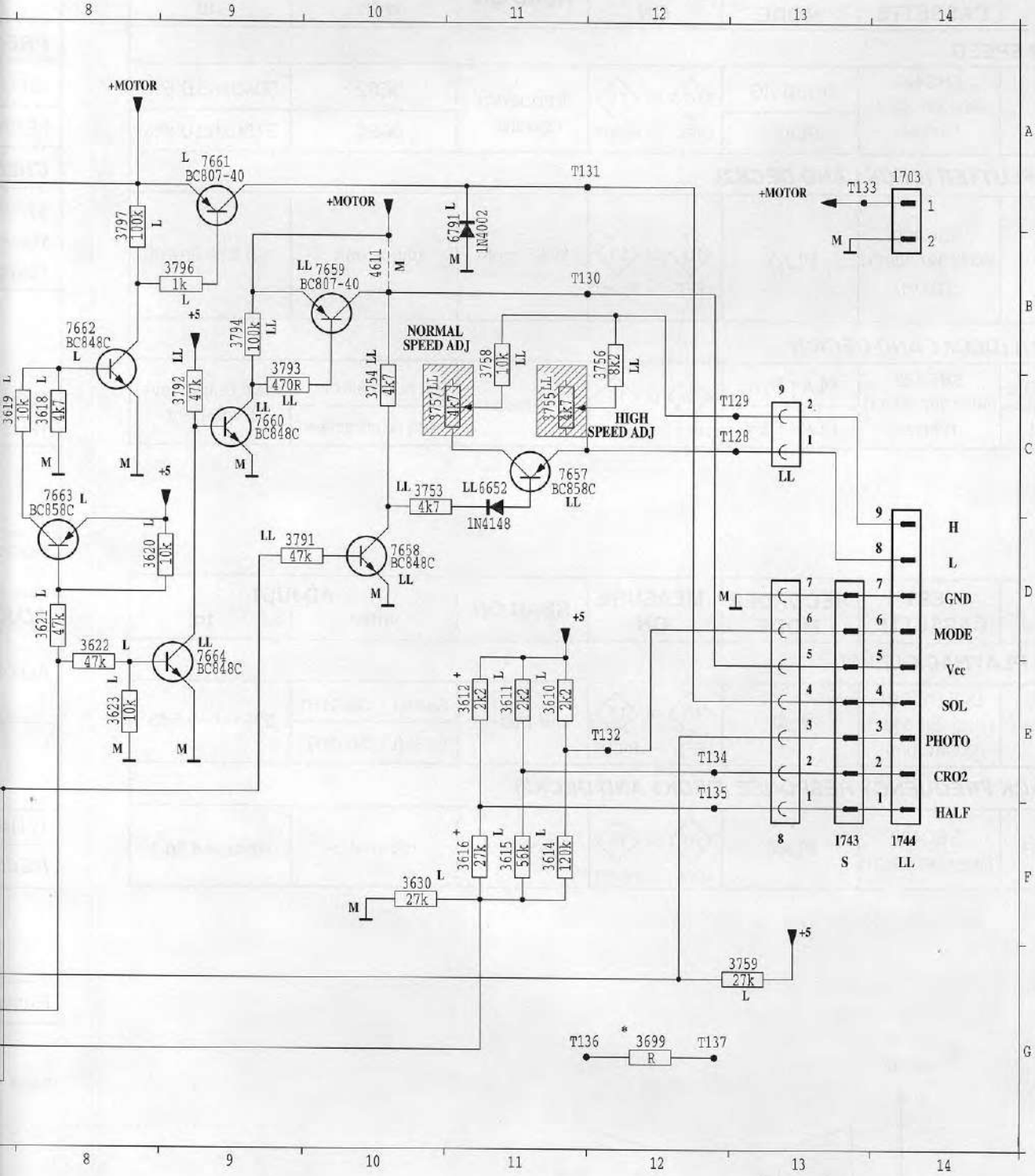

	1703	A14	T109	G 2
	1704	B 2	T110	G 2
	1707	B 2	T111	G 2
	1741	D 2	T112	G 2
	1742	A 2	T113	F 2
	3601	E 3	T114	F 2
	3602	E 4	T115	F 3
A	3603	E 4	T116	D 2
	3604	E 4	T117	C 4
	3605	F 3	T118	C 4
	3606	F 4	T119	B 4
	3607	F 4	T120	A 2
	3608	F 4	T121	A 3
	3610	E11	T122	A 4
	3611	E11	T123	D 2
	3612	E11	T124	B 2
	3613	E 5	T125	C 2
	3614	F11	T126	C 2
	3615	F11	T127	C 2
	3616	F11	T128	C13
B	3617	F 5	T129	C13
	3618	C 8	T130	B11
	3619	C 7	T131	A11
	3620	D 8	T132	E12
	3621	D 8	T133	A13
	3622	D 8	T134	E12
	3623	E 8	T135	E12
	3624	C 7	T136	G11
	3625	C 7	T137	G12
	3626	D 6		
	3627	D 7		
C	3628	D 7		
	3629	E 6		
	3679	E 6		
	3680	E 5		
	3681	E 6		
	3682	D 4		
	3683	C 5		
	3684	D 5		
	3685	C 6		
	3686	C 6		
	3687	B 5		
D	3688	B 5		
	3689	B 3		
	3699	G12		
	3741	B 6		
	3742	B 6		
	3753	C10		
	3754	C10		
	3755	C11		
	3756	B12		
	3757	C10		
E	3758	B11		
	3759	G13		
	3791	D 9		
	3792	C 9		
	3793	C 9		
	3794	B 9		
	3796	B 9		
	3797	A 8		
	4611	B10		
	6651	E 5		
	6652	C11		
F	6790	A 4		
	6791	A11		
	7650	E 6		
	7651	D 5		
	7652	C 5		
	7653	B 5		
	7654	B 6		
	7655	A 6		
	7657	C11		
	7658	D10		
	7659	B10		
	7660	C 9		
	7661	A 9		
G	7662	B 8		
	7663	C 8		
	7664	E 9		
	7665	C 7		
	7666	D 6		
	8	F13		
	9	C13		
	9783	D 5		

r Dolby variant,

DB/DD/FR	8k2
DB/DD/FF	6k8
DB/DD/FR	10k

ETF2 CIRCUIT II

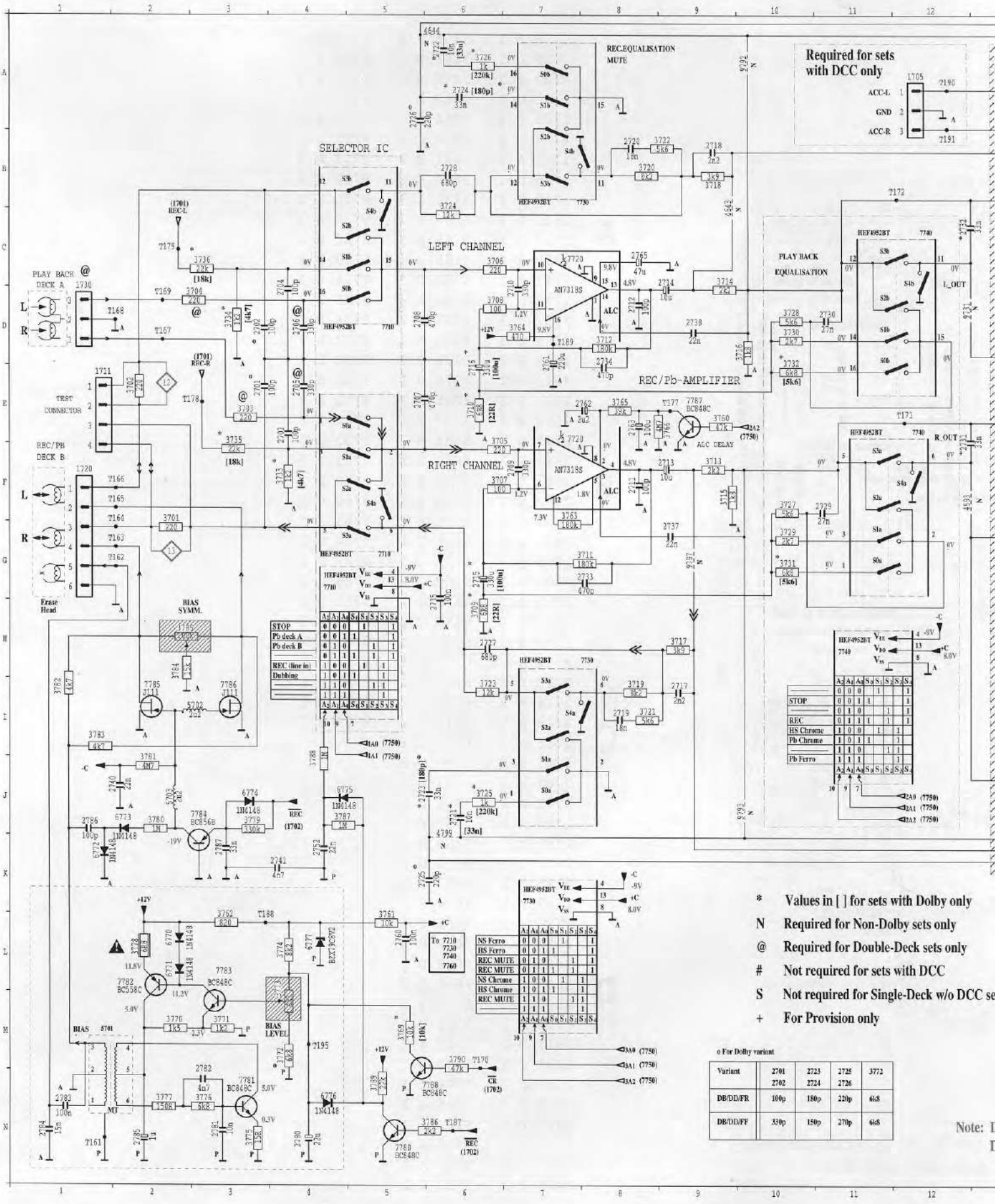

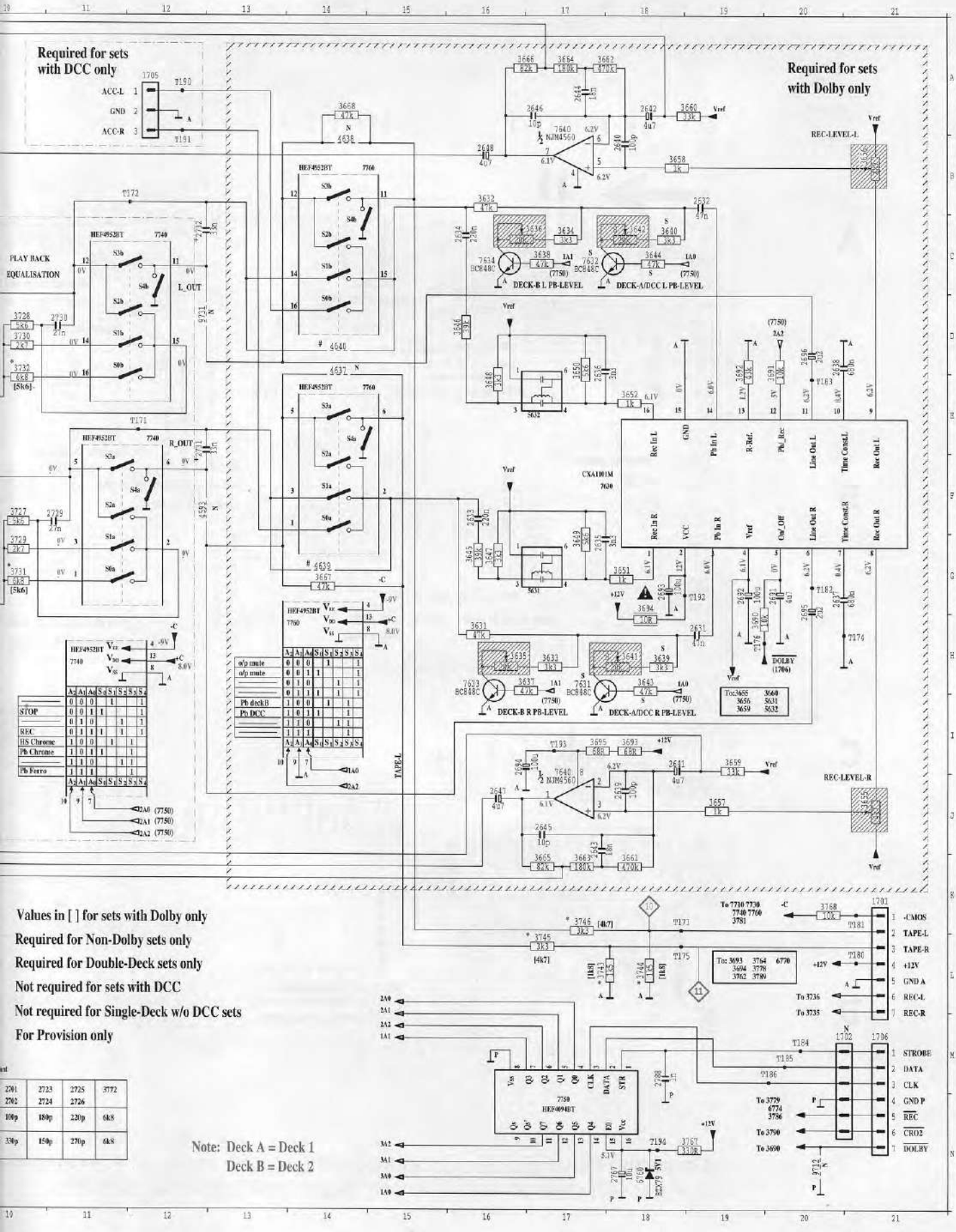

2701 2702	2723 2724	2725 2726	3772
100p	180p	220p	6k8
330p	150p	270p	6k8

COMPONENT LAYOUT

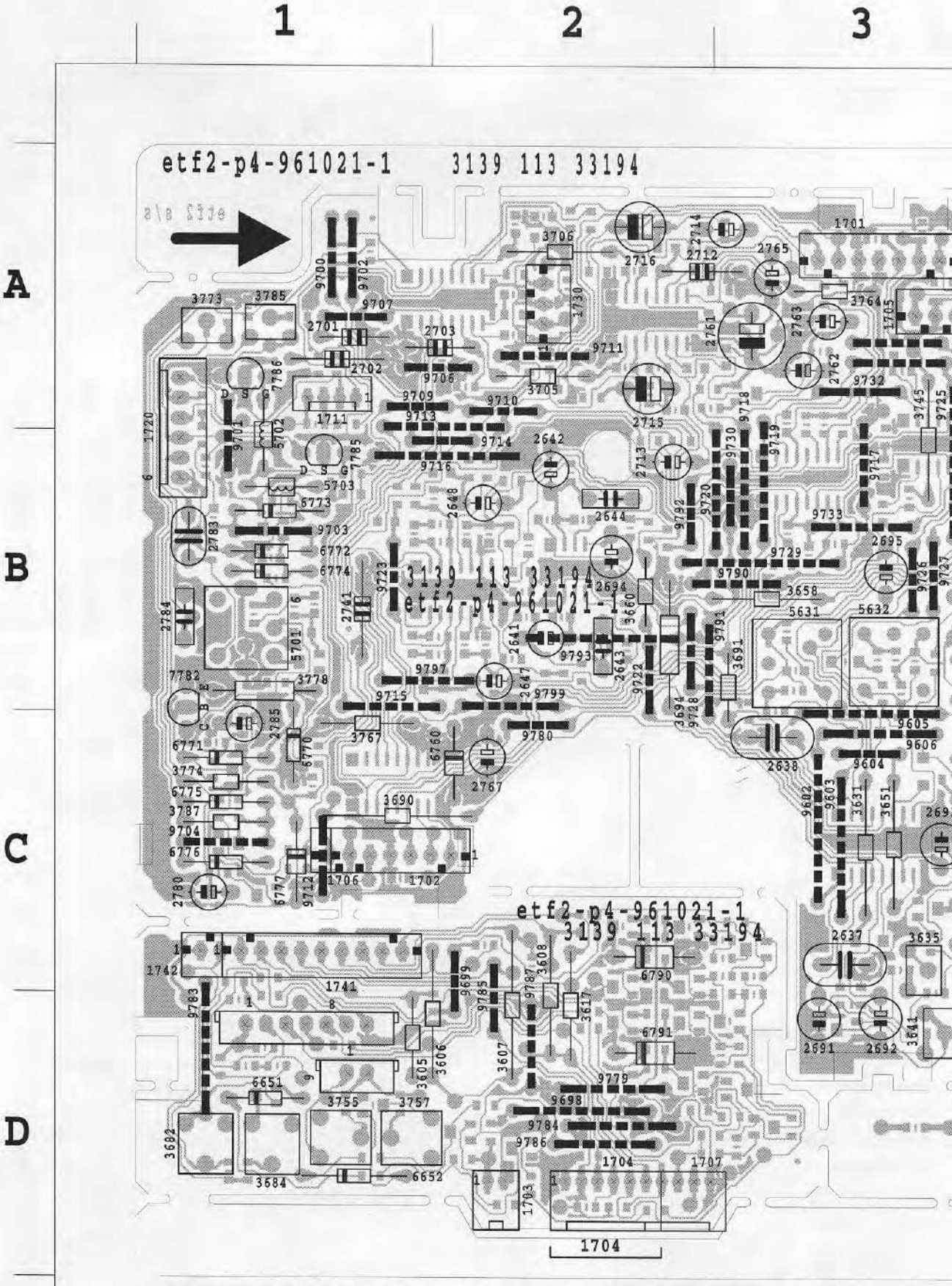

This assembly drawing shows a summary of all possible versions. For componen
used in a specific version see schematic diagram and respective parts list.

3

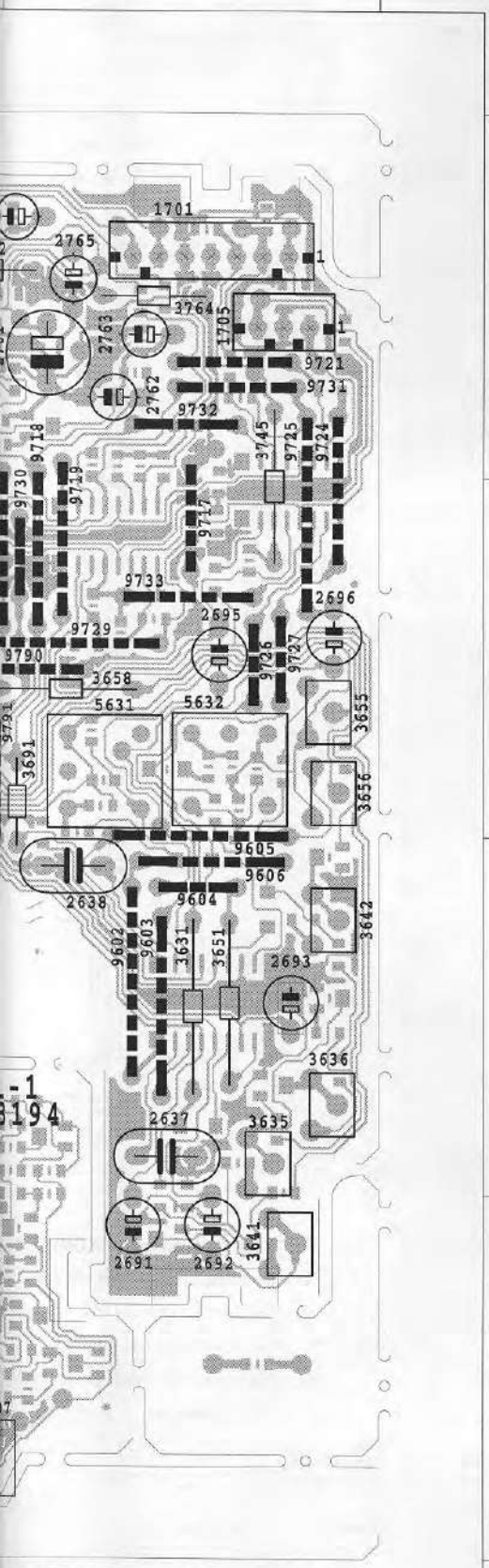

versions. For components
spective parts list.

3

A

8	D	1	3656	B	3	9712	C	1
9	D	1	3658	B	3	9713	A	2
1701	A	3	3660	B	2	9714	B	2
1702	C	1	3682	D	1	9715	B	1
1703	D	2	3684	D	1	9716	B	2
1704	D	2	3690	C	1	9717	B	3
1705	A	3	3691	B	3	9718	B	3
1706	C	1	3694	B	2	9719	B	3
1707	D	2	3705	A	2	9720	B	3
1711	A	1	3706	A	2	9721	A	3
1720	A	1	3745	B	3	9722	B	2
1730	A	2	3755	D	1	9723	B	1
1741	C	1	3757	D	1	9724	B	3
1742	C	1	3764	A	3	9725	B	3
2637	C	3	3767	C	1	9726	B	3
2638	C	3	3773	A	1	9727	B	3
2641	B	2	3774	C	1	9728	B	2
2642	B	2	3778	B	1	9729	B	3
2643	B	2	3785	A	1	9730	B	3
2644	B	2	3787	C	1	9731	A	3
2647	B	2	5631	B	3	9732	A	3
2648	B	2	5632	B	3	9733	B	3
2691	D	3	5701	B	1	9779	D	2
2692	D	3	5702	B	1	9780	C	2
2693	C	3	5703	B	1	9783	D	1
2694	B	2	6651	D	1	9784	D	2
2695	B	3	6652	D	1	9785	D	2
2696	B	3	6760	C	2	9786	D	2
2701	A	1	6770	C	1	9787	D	2
2702	A	1	6771	C	1	9790	B	3
2703	A	2	6772	B	1	9791	B	2
2712	A	2	6773	B	1	9792	B	2
2713	B	2	6774	B	1	9793	B	2
2714	A	3	6775	C	1	9797	B	1
2715	A	2	6776	C	1	9799	B	2
2716	A	2	6777	C	1			
2741	B	1	6790	C	2			
2761	A	3	6791	D	2			
2762	A	3	7782	B	1			
2763	A	3	7785	B	1			
2765	A	3	7786	A	1			
2767	C	2	9602	C	3			
2780	C	1	9603	C	3			
2783	B	1	9604	C	3			
2784	B	1	9605	C	3			
2785	C	1	9606	C	3			
3605	D	1	9698	D	2			
3606	D	2	9699	C	2			
3607	D	2	9700	A	1			
3608	D	2	9701	B	1			
3617	D	2	9702	A	1			
3631	C	3	9703	B	1			
3635	C	3	9704	C	1			
3636	C	3	9706	A	2			
3641	D	3	9707	A	1			
3642	C	3	9709	A	1			
3651	C	3	9710	A	2			
3655	B	3	9711	A	2			

B

C

D

CHIP LAYOUT

This assembly drawing shows a summary of all possible versions. For comp
used in a specific version see schematic diagram and respective parts list.

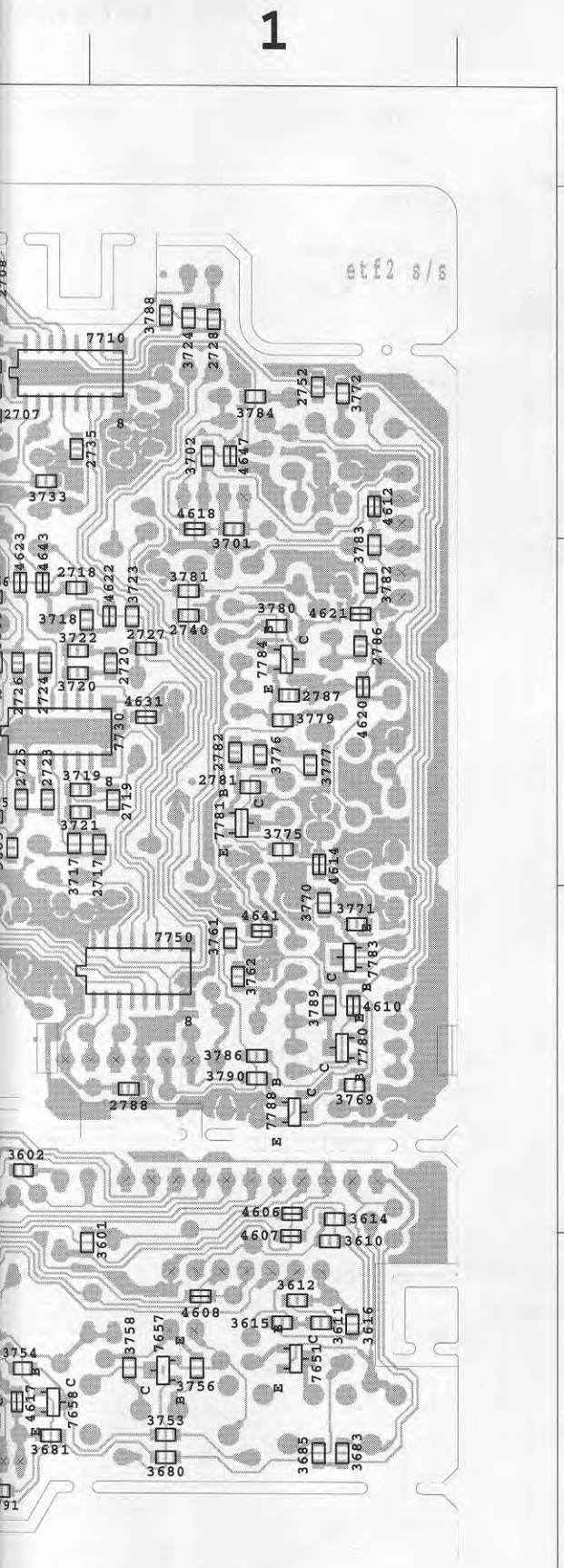

ossible versions. For components
and respective parts list.

A

2631 C 3	3616 D 1	3708 A 2	3784 A 1	7640 B 2
2632 C 3	3618 D 3	3709 A 2	3786 C 1	7650 D 2
2633 C 3	3619 D 3	3710 A 2	3788 A 1	7651 D 1
2634 B 3	3620 D 3	3711 A 2	3789 C 1	7652 C 2
2635 B 3	3621 D 2	3712 A 3	3790 C 1	7653 C 2
2636 B 3	3622 D 2	3713 B 2	3791 D 2	7654 C 2
2639 B 2	3623 D 3	3714 A 2	3792 D 3	7655 C 2
2640 B 2	3624 C 3	3715 A 2	3793 D 2	7657 D 1
2645 B 2	3625 C 3	3716 A 3	3794 D 2	7658 D 2
2646 B 2	3626 C 3	3717 B 2	3796 D 2	7659 D 2
2704 A 2	3627 C 3	3718 B 2	3797 D 2	7660 D 2
2705 A 2	3628 D 3	3719 B 2	4593 B 3	7661 D 2
2706 A 2	3629 D 3	3720 B 2	4606 C 1	7662 D 2
2707 A 2	3630 D 2	3721 B 2	4607 D 1	7663 D 3
2708 A 2	3632 B 3	3722 B 2	4608 D 1	7664 D 3
2709 A 2	3633 C 3	3723 B 1	4609 D 2	7665 C 3
2710 A 2	3634 C 3	3724 A 1	4610 C 1	7666 D 3
2711 A 3	3637 C 3	3725 B 2	4611 D 2	7710 A 2
2717 B 1	3638 C 3	3726 B 2	4612 A 1	7720 A 2
2718 B 2	3639 D 3	3727 B 3	4613 A 2	7730 B 2
2719 B 1	3640 C 3	3728 A 3	4614 B 1	7740 B 3
2720 B 1	3643 C 3	3729 B 3	4615 A 2	7750 C 1
2721 B 2	3644 B 3	3730 A 3	4616 D 2	7760 B 3
2722 B 2	3645 B 3	3731 B 3	4617 D 2	7780 C 1
2723 B 2	3646 B 3	3732 A 3	4618 A 1	7781 B 1
2724 B 2	3647 B 3	3733 A 2	4619 D 2	7783 C 1
2725 B 2	3648 B 3	3734 A 2	4620 B 1	7784 B 1
2726 B 2	3649 B 3	3735 A 2	4621 B 1	7787 A 3
2727 B 1	3650 B 3	3736 A 2	4622 B 1	7788 C 1
2728 A 1	3652 C 3	3741 C 2	4623 B 2	
2729 B 3	3657 B 2	3742 C 2	4624 A 3	
2730 A 3	3659 B 2	3743 A 3	4625 A 3	
2731 B 3	3661 B 2	3744 A 3	4626 B 2	
2732 A 3	3662 B 2	3746 A 3	4627 B 3	
2733 A 2	3663 B 2	3753 D 1	4628 C 3	
2734 A 2	3664 B 2	3754 D 2	4629 B 3	
2735 A 2	3665 B 2	3756 D 1	4630 A 3	
2737 A 2	3666 B 2	3758 D 1	4631 B 1	
2738 A 2	3667 B 3	3759 D 2	4633 D 3	
2740 B 1	3668 A 3	3760 A 2	4634 B 3	
2752 A 1	3679 D 2	3761 C 1	4635 D 3	
2760 A 2	3680 D 1	3762 C 1	4636 B 2	
2781 B 1	3681 D 2	3763 A 2	4637 B 3	
2782 B 1	3683 D 1	3765 A 3	4638 A 3	
2786 B 1	3685 D 1	3766 A 3	4639 B 3	
2787 B 1	3686 C 3	3768 A 3	4640 A 3	
2788 C 1	3687 C 2	3769 C 1	4641 C 1	
3601 D 2	3688 C 2	3770 C 1	4643 B 2	
3602 C 2	3689 D 2	3771 C 1	4644 B 2	
3603 C 2	3692 B 3	3772 A 1	4645 B 3	
3604 C 2	3693 B 2	3775 B 1	4646 B 3	
3609 D 2	3695 B 2	3776 B 1	4647 A 1	
3610 D 1	3699 D 3	3777 B 1	4799 B 2	
3611 D 1	3701 A 1	3779 B 1	7630 C 3	
3612 D 1	3702 A 1	3780 B 1	7631 D 3	
3613 C 2	3703 A 2	3781 B 1	7632 C 3	
3614 C 1	3704 A 2	3782 B 1	7633 C 3	
3615 D 1	3707 A 2	3783 B 1	7634 C 3	

B

C

D

TAPE MECHANISM A ELECTRONICS

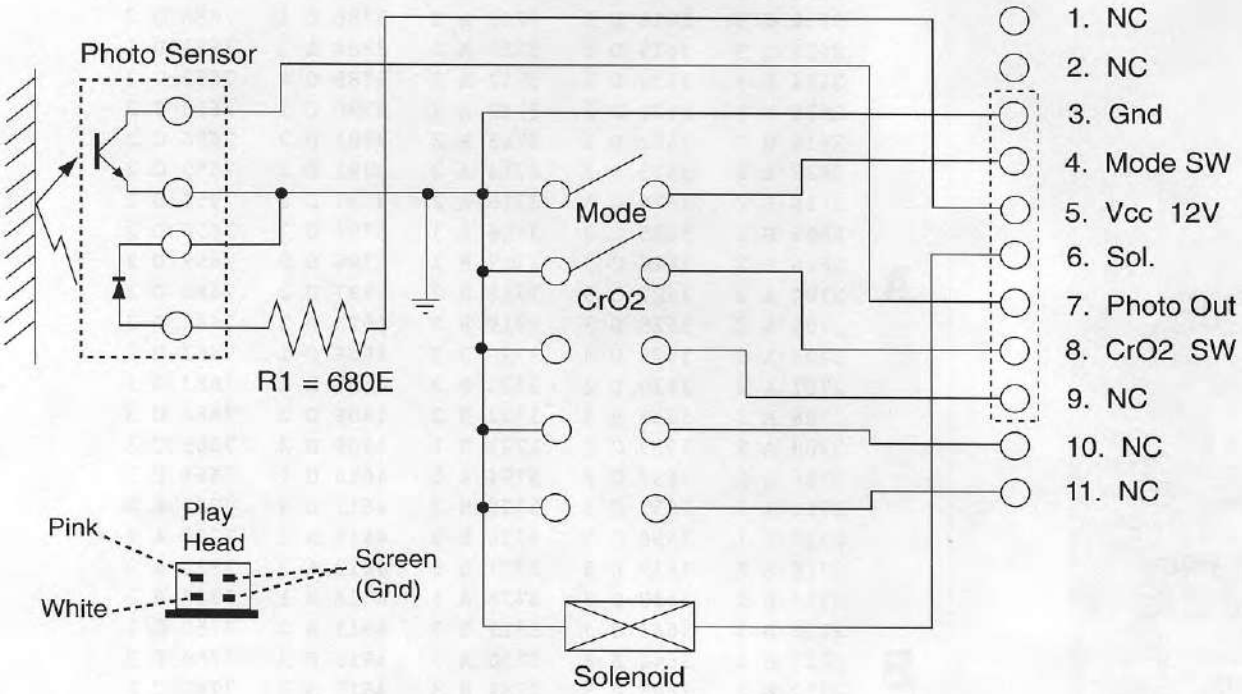

TAPE MECHANISM B ELECTRONICS

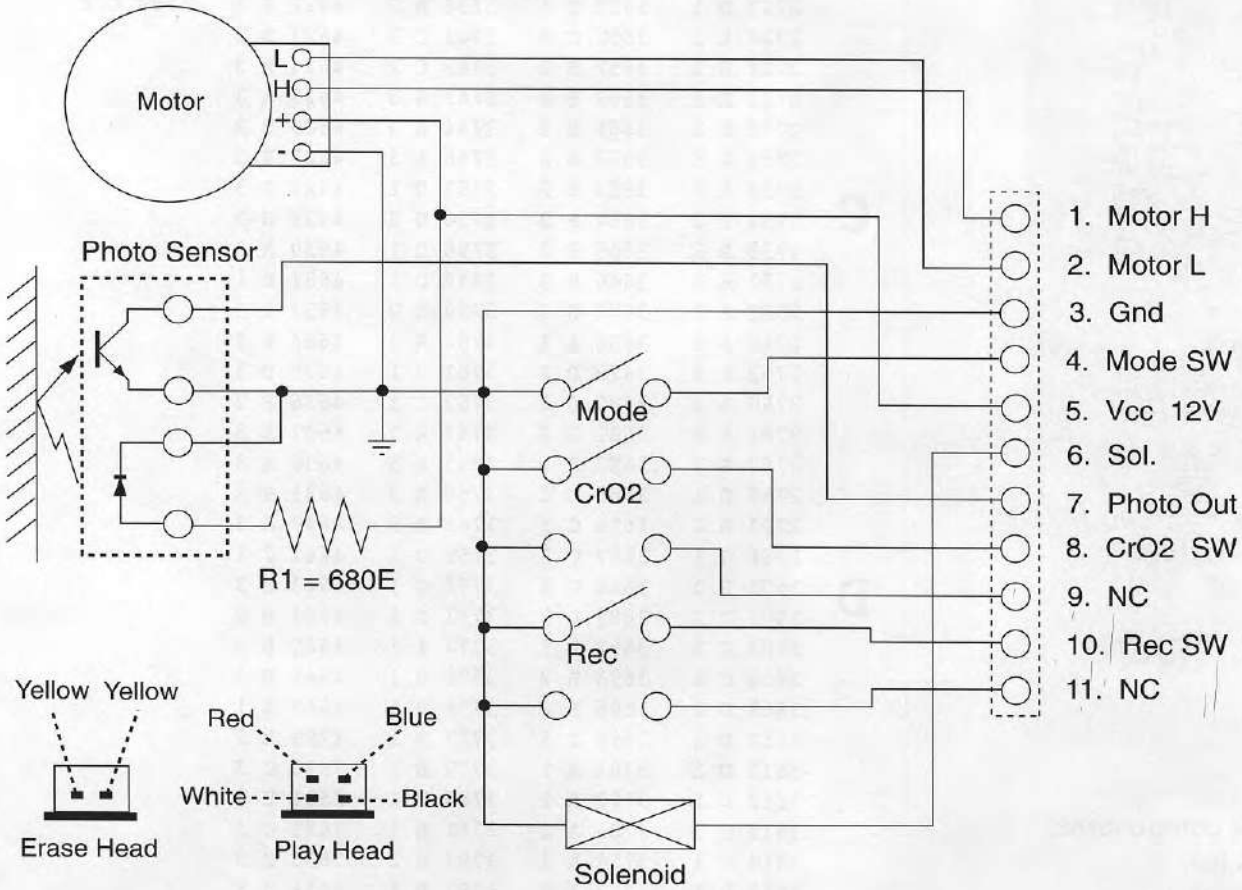

ETF2 TAPE

Screw
D3 x 10

TAPE MEC

MECHANICAL
1 4822 361
4 Screw M2
5 Screw M2

NOTE: Only
servic

ETF2 TAPE MODULE

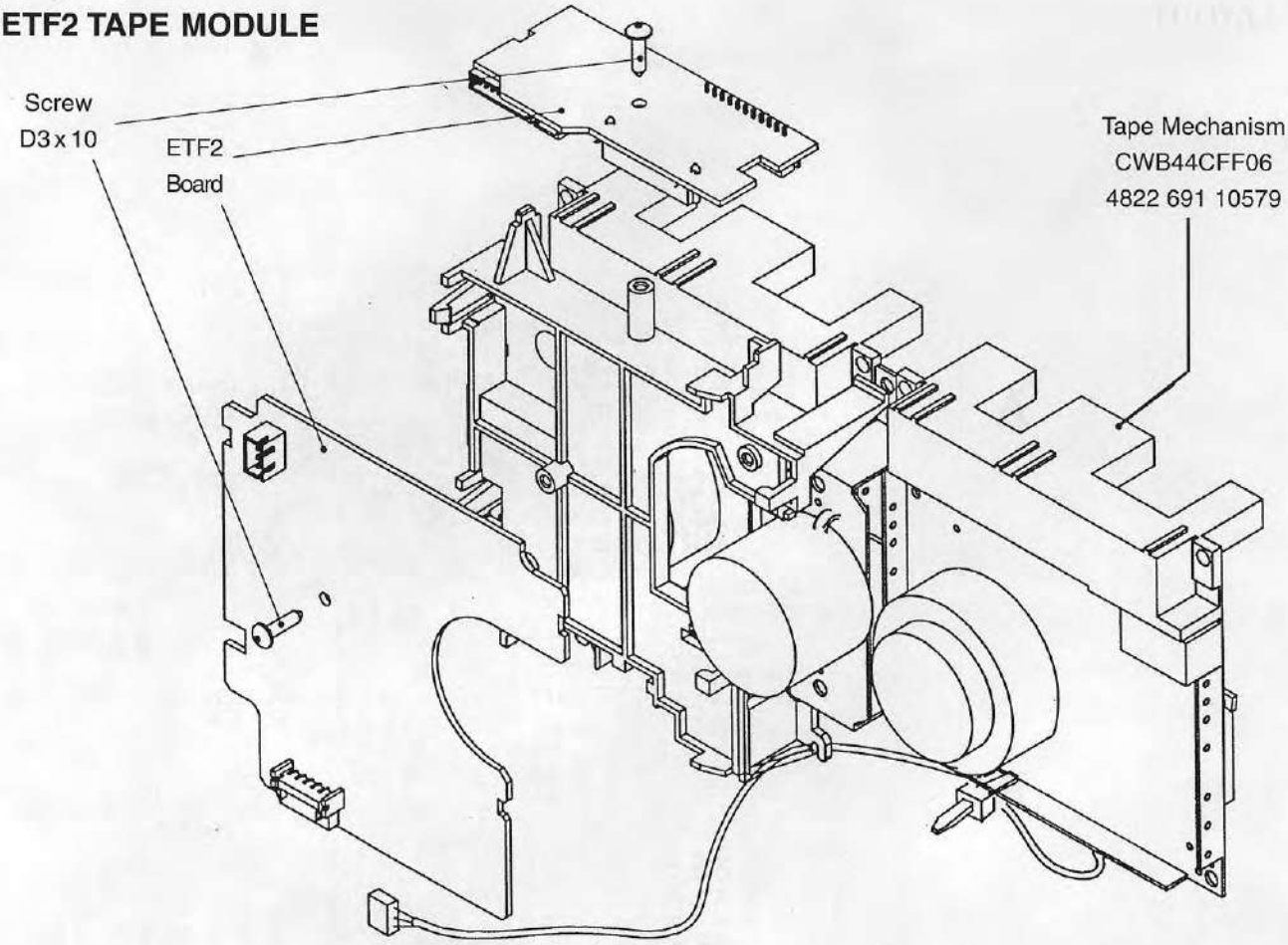

TAPE MECHANISM A & B

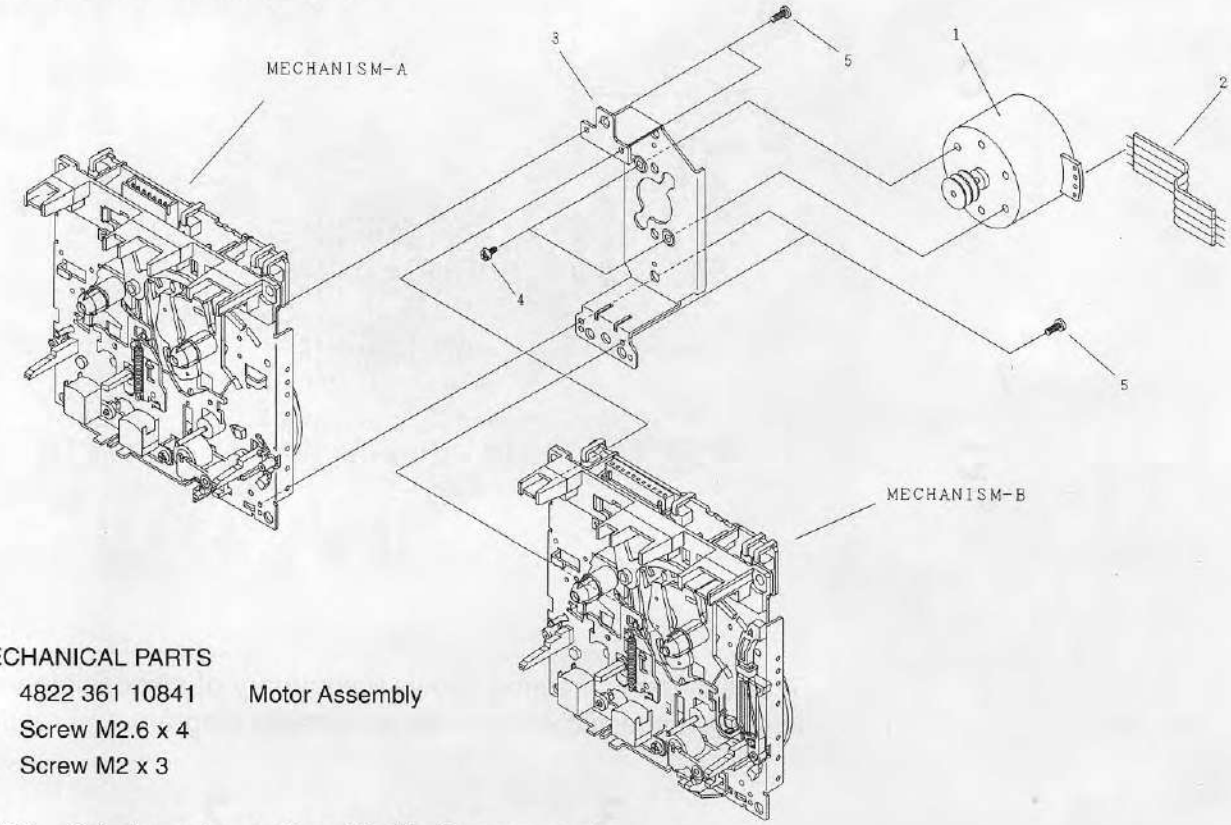

MECHANICAL PARTS

1	4822 361 10841	Motor Assembly
4	Screw M2.6 x 4	
5	Screw M2 x 3	

NOTE: Only the parts mentioned in this list are normal service spare parts.

PLAYBACK MECHANISM A

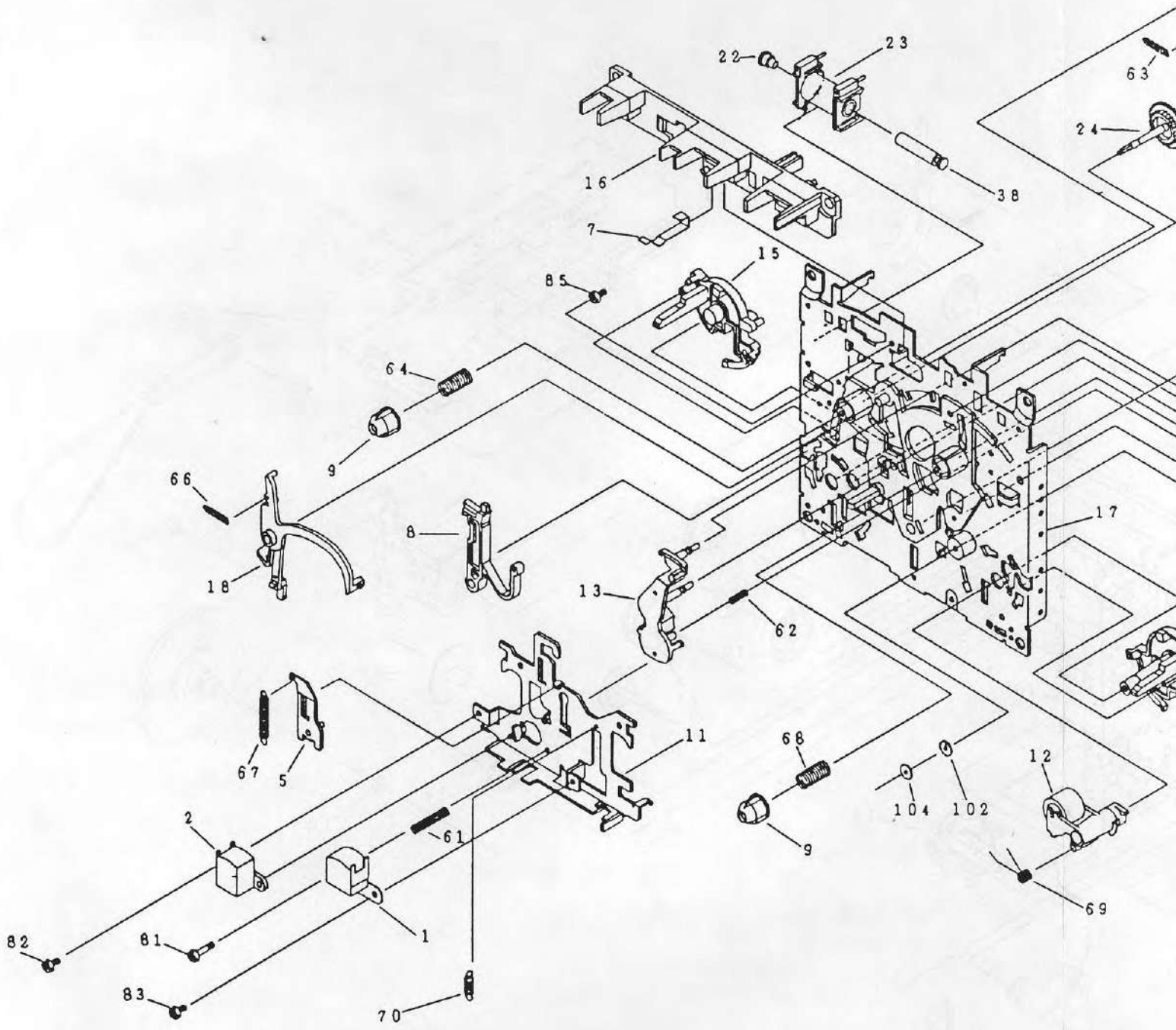

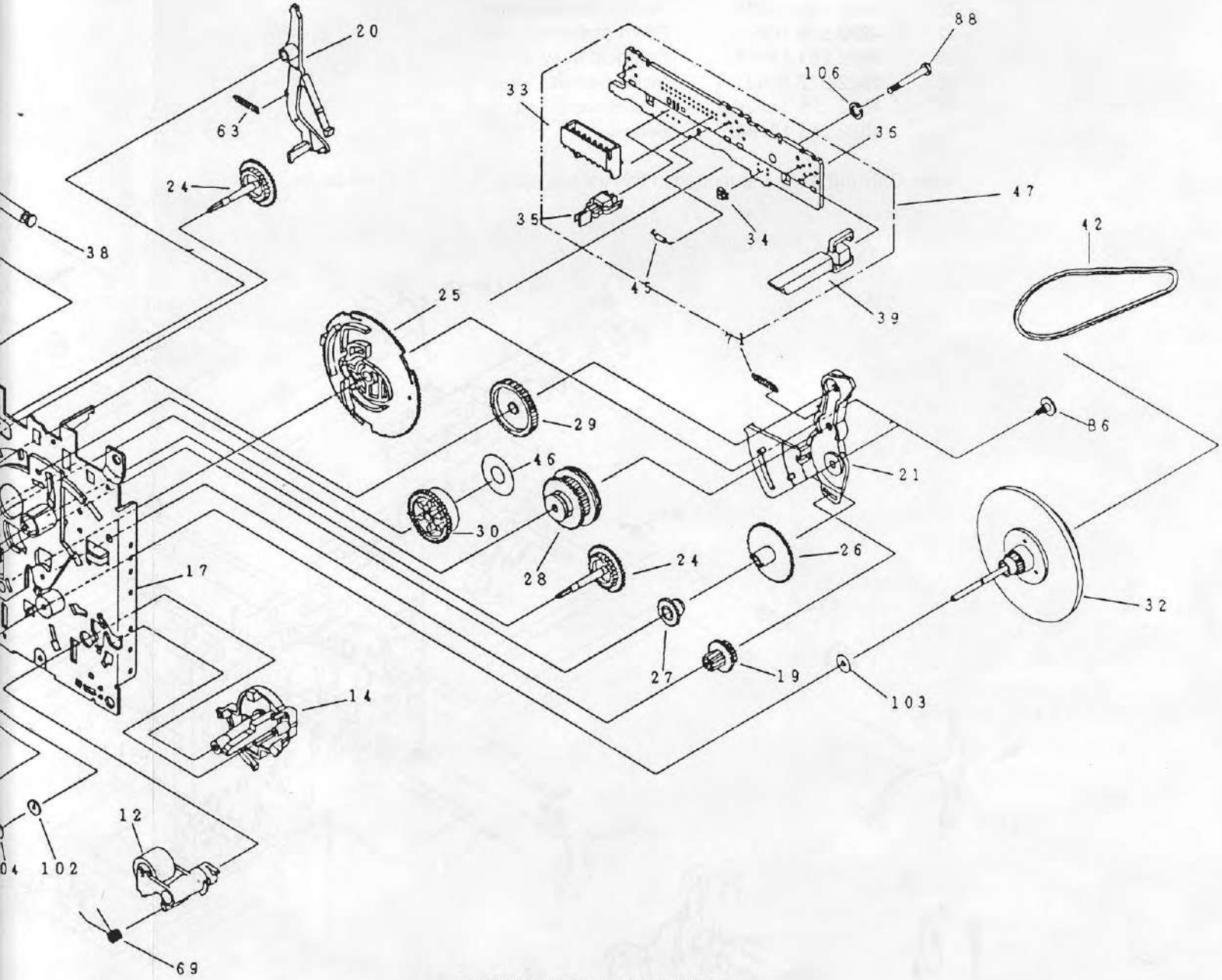

MECHANISM A - P/B DECK

1	4822 249 10397	Playback Head
12	4822 528 10974	Pinch arm assy right
23	4822 281 11069	Solenoid assy
35	4822 277 11531	Mode Switch
39	4822 276 13704	Leaf Switch
42	4822 358 10168	Belt

Note: Only the parts mentioned in this list are normal service spare parts.

REC/PLAYBACK MECHANISM B

MECHANISM B REC/PB DECK

1	4822 249 10526	REC/PB Head
10	4822 528 10975	Pinch arm assy left
12	4822 528 10974	Pinch arm assy right
23	4822 281 11069	Solenoid assy
35	4822 277 11531	Mode Switch
39	4822 276 13704	Leaf Switch
42	4822 358 10169	Belt

Note: Only the parts mentioned in this list are normal service spare parts.

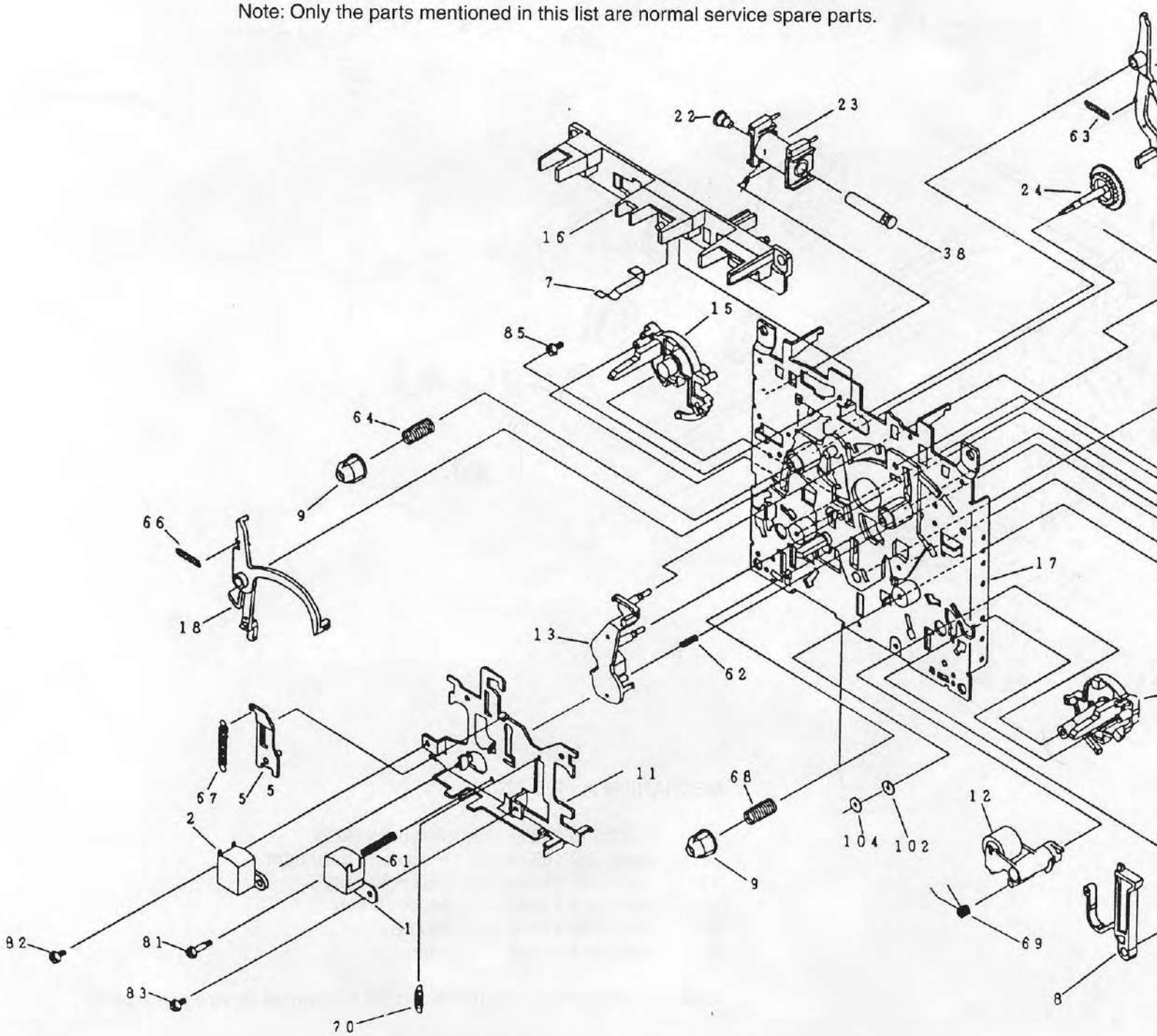

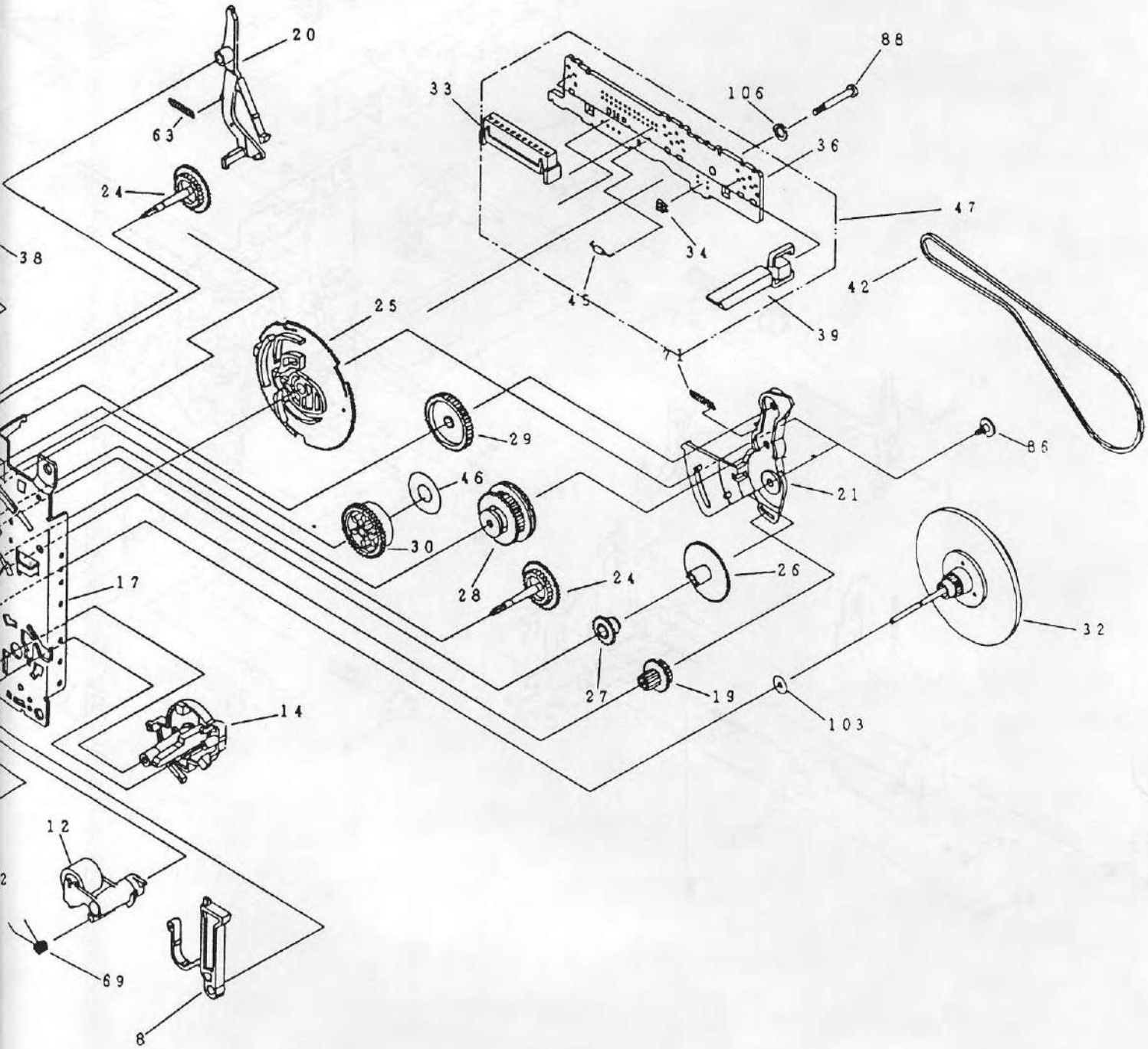
20
88
33
106
63
36
24
47
38
34
42
45
25
39
71
29
86
46
21
30
17
28
24
26
32
27
19
14
103
12
69
8

CASSETTE BOARD PARTLIST

CAPACITOR

2701	4822 122 33195	100pF 10% 50V (FW363)
2701	4822 126 12787	220PF 10% 50V
2702	4822 126 12787	330PF 10% 50V
2702	4822 122 33195	100pF 10% 50V
2703	4822 122 33195	100pF 10% 50V
2704	5322 122 31863	330pF 5% 50V
2705	5322 122 31863	330pF 5% 50V
2706	5322 122 32531	100pF 5% 50V
2707	5322 122 34099	470pF 10% 63V
2708	5322 122 34099	470pF 10% 63V
2709	5322 122 31863	330pF 5% 50V
2710	5322 122 31863	330pF 5% 50V
2711	5322 122 32531	100pF 5% 50V
2712	4822 122 33195	100pF 10% 50V
2713	4822 124 41579	10µF 20% 50V
2714	4822 124 41579	10µF 20% 50V
2715	4822 124 41584	100µF 20% 10V (For -/22 & -/25)
2715	4822 124 40849	330µF 20% 16V
2716	4822 124 41584	100µF 20% 10V (For -/22 & -/25)
2716	4822 124 40849	330µF 20% 16V
2717	4822 122 33175	2.2nF 20% 50V
2718	4822 122 33175	2.2nF 20% 50V
2719	4822 122 33893	18nF 10% 63V
2720	4822 122 33893	18nF 10% 63V
2721	4822 122 33177	10nF 20% 50V
2722	4822 122 33177	10nF 20% 50V
2723	5322 122 33538	150pF 5% 63V (FW373)
2723	4822 122 33342	33nF 10% 63V (FW363)
2724	5322 122 33538	150pF 5% 63V (FW373)
2724	4822 122 33342	33nF 10% 63V (FW363)
2725	5322 126 10794	220pF 5% 63V
2726	5322 126 10794	220pF 5%63V
2727	4822 122 32535	680pF 10% 63V
2728	4822 122 32535	680pF 10% 63V
2729	4822 122 32541	27nF 10% 63V
2730	4822 122 32541	27nF 10% 63V
2733	5322 122 34099	470pF 5% 50V
2734	5322 122 31863	330pF 5% 50V
2735	4822 126 10002	100nF 20% 25V
2737	5322 122 32654	22nF 10% 63V

CAPACITORS

2738	5322 122 32654	22nF 10% 63V
2740	5322 122 32654	22nF 10% 63V
2741	4822 126 11714	4.7nF 20%
2752	5322 122 32654	22nF 10% 63V
2760	4822 126 10002	100nF 20% 25V
2761	4822 124 22263	220µF 20% 25V
2762	4822 124 41576	2.2µF 20% 50V
2763	4822 124 41584	100µF 20% 10V
2765	4822 124 40433	47µF 20% 25V
2767	4822 124 41579	10µF 20% 50V
2780	4822 124 41596	22µF 20% 50V
2781	4822 122 33177	10nF 20% 50V
2782	5322 126 10223	4.7nF 10% 63V
2783	5322 121 42386	100nF 5% 63V
2784	4822 121 41856	22nF 5% 250V
2785	4822 124 40242	1µF 20% 63V
2786	5322 122 32531	100pF 5% 50V
2787	4822 122 33342	33nF 10% 63V
2788	5322 122 34123	1nF 10% 50V

RESISTORS

3601	4822 117 11449	2k2 1% 0.1W
3602	4822 117 11449	2k2 1% 0.1W
3604	4822 117 11449	2k2 1% 0.1W
3605	4822 116 52239	120k 5% 0.5W
3606	4822 116 52291	56k 5% 0.5W
3608	4822 116 52239	120k 5% 0.5W
3609	4822 051 20273	27k 5% 0.1W
3610	4822 117 11449	2k2 1% 0.1W
3611	4822 117 11449	2k2 1% 0.1W
3613	4822 117 11449	2k2 1% 0.1W
3614	4822 051 20124	120k 5% 0.1W
3615	4822 051 20563	56k 5% 0.1W
3617	4822 116 52291	56k 5% 0.5W
3618	4822 051 20472	4k7 5% 0.1W
3619	4822 051 20103	10k 5% 0.1W
3620	4822 051 20103	10k 5% 0.1W
3621	4822 051 20473	47k 5% 0.1W
3622	4822 051 20473	47k 5% 0.1W
3623	4822 051 20103	10k 5% 0.1W
3624	4822 051 20472	4k7 5% 0.1W

RESISTO

3625
3626
3627
3628
3629
3630
3679
3680
3681
3683
3684
3685
3686
3687
3688
3689
3699
3701
3702
3703
3704
3705
3706
3707
3708
3709
3710
3711
3712
3713
3714
3715
3716
3717
3718
3719
3720
3721
3722
3723

CASSETTE BOARD PARTLIST

63V
63V
%
63V
% 25V

% 25V
% 50V
% 10V
25V
50V

50V
50V
% 63V
63V
250V

63V
50V
63V
50V

.1W
.1W
.1W
0.5W
.5W

0.5W
.1W
.1W
.1W
.1W

0.1W
.1W
.5W
.1W
.1W

.1W
.1W
.1W
.1W
.1W

RESISTORS

3625	4822 051 20103	10k 5% 0.1W
3626	4822 051 20103	10k 5% 0.1W
3627	4822 051 20473	47k 5% 0.1W
3628	4822 051 20473	47k 5% 0.1W
3629	4822 051 20103	10k 5% 0.1W
3630	4822 051 20273	27k 5% 0.1W
3679	4822 051 20473	47k 5% 0.1W
3680	4822 051 20472	4k7 5% 0.1W
3681	4822 051 20472	4k7 5% 0.1W
3683	4822 051 20103	10k 5% 0.1W
3684	4822 100 11319	4k7 30%lin 0.1W
3685	4822 051 20822	8k2 5% 0.1W
3686	4822 051 20473	47k 5% 0.1W
3687	4822 051 20471	470Ω 2% 0.25W
3688	4822 051 20104	100k 5% 0.1W
3689	4822 051 20273	27k 5% 0.1W
3699	4822 051 20332	3k3 5% 0.1W
3701	4822 051 20221	220Ω 5% 0.1W
3702	4822 051 20221	220Ω 5% 0.1W
3703	4822 051 20221	220Ω 5% 0.1W
3704	4822 051 20221	220Ω 5% 0.1W
3705	4822 116 83872	220Ω 5% 0.5W
3706	4822 116 83872	220Ω 5% 0.5W
3707	4822 051 20101	100Ω 5% 0.1W
3708	4822 051 20101	100Ω 5% 0.1W
3709	4822 051 20688	6Ω8 5% 0.1W
3710	4822 051 20688	6Ω8 5% 0.1W
3711	4822 051 20184	180k 5% 0.1W
3712	4822 051 20184	180k 5% 0.1W
3713	4822 117 11449	2k2 1% 0.1W
3714	4822 117 11449	2k2 1% 0.1W
3715	4822 051 20182	1k8 5% 0.1W
3716	4822 051 20182	1k8 5% 0.1W
3717	4822 051 20392	3k9 5% 0.1W
3718	4822 051 20392	3k9 5% 0.1W
3719	4822 051 20822	8k2 5% 0.1W
3720	4822 051 20822	8k2 5% 0.1W
3721	4822 051 20562	5k6 5% 0.1W
3722	4822 051 20562	5k6 5% 0.1W
3723	4822 117 11383	12k 1% 0.1W

RESISTORS

3724	4822 117 11383	12k 1% 0.1W
3725	4822 051 10102	1k 2% 0.25W
3726	4822 051 10102	1k 2% 0.25W
3727	4822 051 20562	5k6 5% 0.1W
3728	4822 051 20562	5k6 5% 0.1W
3729	4822 051 20272	2k7 5% 0.1W
3730	4822 051 20272	2k7 5% 0.1W
3731	4822 051 20682	6k8 5% 0.1W
3732	4822 051 20682	6k8 5% 0.1W
3765	4822 051 20393	39k 5% 0.1W
3766	4822 051 20475	4M7 5% 0.1W
3767	4822 116 52219	330Ω 5% 0.5W
3768	4822 051 20103	10k 5% 0.1W
3769	4822 051 20103	10k 5% 0.1W (For -/22 & -/25)
3769	4822 051 20822	8k2 5% 0.1W
3770	4822 117 11139	1k5 1% 0.1W
3771	4822 051 20122	1k2 5% 0.1W
3772	4822 051 20822	8k2 5% 0.1W
3773	5322 100 11542	4k7 30%lin 0.1W
3774	4822 116 52303	8k2 5% 0.5W
3775	4822 051 20159	15Ω 5% 0.1W
3776	4822 051 20682	6k8 5% 0.1W
3777	4822 117 10353	150Ω 1% 0.1W
3778	4822 052 10109	10Ω 5% 0.33W
3779	4822 051 20334	330k 5% 0.1W
3780	4822 051 20105	1M 5% 0.1W
3781	4822 051 20475	4M7 5% 0.1W
3782	4822 051 20472	4k7 5% 0.1W
3783	4822 051 20472	4k7 5% 0.1W
3784	4822 051 20153	15k 5% 0.1W
3785	5322 100 11539	100k 30%lin 0.1W
3786	4822 117 11449	2k2 1% 0.1W
3787	4822 116 52235	1M 5% 0.5W
3788	4822 051 20105	1M 5% 0.1W
3789	4822 051 20223	22k 5% 0.1W
3790	4822 051 20473	47k 5% 0.1W
3796	4822 051 10102	1k 2% 0.25W
3797	4822 051 20104	100k 5% 0.1W

CASSETTE BOARD PARTLIST

JUMPER

4606	4822 051 20008	0Ω Jumper
4607	4822 051 20008	0Ω Jumper
4608	4822 051 20008	0Ω Jumper
4609	4822 051 20008	0Ω Jumper
4610	4822 051 20008	0Ω Jumper
4611	4822 051 20008	0Ω Jumper
4612	4822 051 20008	0Ω Jumper
4614	4822 051 20008	0Ω Jumper
4615	4822 051 20008	0Ω Jumper
4616	4822 051 20008	0Ω Jumper
4617	4822 051 20008	0Ω Jumper
4618	4822 051 20008	0Ω Jumper
4619	4822 051 20008	0Ω Jumper
4620	4822 051 20008	0Ω Jumper
4621	4822 051 20008	0Ω Jumper
4622	4822 051 20008	0Ω Jumper
4623	4822 051 20008	0Ω Jumper
4624	4822 051 20008	0Ω Jumper
4625	4822 051 20008	0Ω Jumper
4626	4822 051 20008	0Ω Jumper
4630	4822 051 20008	0Ω Jumper
4631	4822 051 20008	0Ω Jumper
4641	4822 051 20008	0Ω Jumper
4647	4822 051 20008	0Ω Jumper

COIL

5701	4822 156 20946	Coil Osc 100kHz
5702	4822 156 21721	Coil 2.2μH 10%
5703	4822 156 21721	Coil 2.2μH 10%

DIODE

6651	4822 130 30621	1N4148
6760	4822 130 34233	BZX79-C5V1
6770	4822 130 30621	1N4148
6771	4822 130 30621	1N4148
6772	4822 130 30621	1N4148
6773	4822 130 30621	1N4148
6774	4822 130 30621	1N4148
6775	4822 130 30621	1N4148
6776	4822 130 30621	1N4148
6777	4822 130 34382	BZX79-C8V2
6790	5322 130 30684	1N4002
6791	5322 130 30684	1N4002

TRANSISTOR

7631	5322 130 42136	BC848C (For -/22 & -/25)
7632	5322 130 42136	BC848C (For -/22 & -/25)
7633	5322 130 42136	BC848C (For -/22 & -/25)
7634	5322 130 42136	BC848C (For -/22 & -/25)
7650	5322 130 42136	BC848C
7651	4822 130 42513	BC858C
7652	5322 130 42136	BC848C
7653	5322 130 60123	BC807-40
7654	5322 130 42136	BC848C
7655	5322 130 60123	BC807-40

TRANSISTORS

7661	5322 130 60123	BC807-40
7662	5322 130 42136	BC848C
7663	4822 130 42513	BC858C
7665	4822 130 42513	BC858C
7666	5322 130 42136	BC848C
7780	5322 130 42136	BC848C
7781	5322 130 42136	BC848C
7782	5322 130 60068	BC558C
7783	5322 130 42136	BC848C
7784	4822 130 60373	BC856B
7785	4822 130 63494	J111
7786	4822 130 63494	J111
7787	5322 130 42136	BC848C
7788	5322 130 42136	BC848C

INTERGRATED CIRCUITS

7630	4822 209 90406	CXA1101M (For -/22 & -/25)
7640	4822 209 83357	NJM4560M (For -/22 & -/25)
7710	4822 209 32919	HEF4952BT
7720	4822 209 32918	AN7318S
7730	4822 209 32919	HEF4952BT
7740	4822 209 32919	HEF4952BT
7750	5322 209 11306	HEF4094BT
7760	4822 209 32919	HEF4952BT (For -/22 & -/25)

& -/25)
& -/25)
& -/25)
& -/25)

2 & -/25)
2 & -/25)

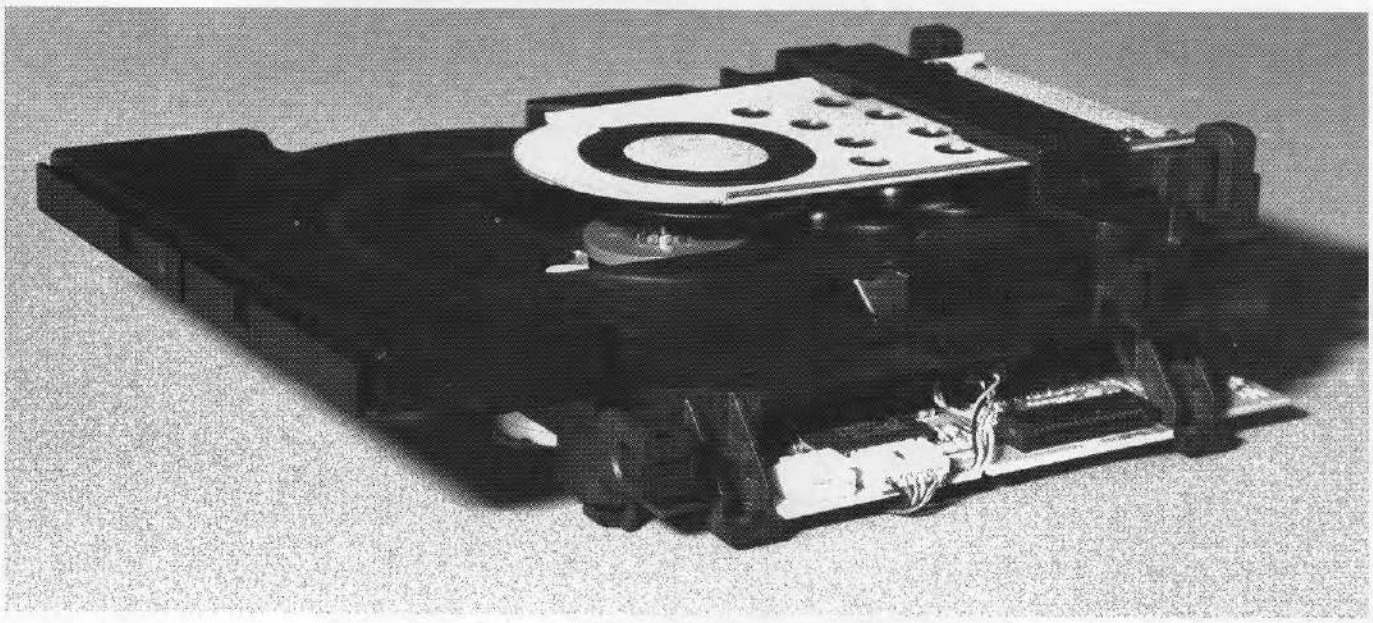

ECO SHORT LOADER UNIT

for Systems

TABLE OF CONTENTS

Dismantling hints CD Short Loader

Dismantling the tray

a) Press open/close button to open the tray. If the tray doesn´t work, use a small screwdriver as shown in Fig.1 point 1 to move the tray outside. After the first centimetre it is possible to pull the tray out by hand.

b) Release two snaps and remove tray.

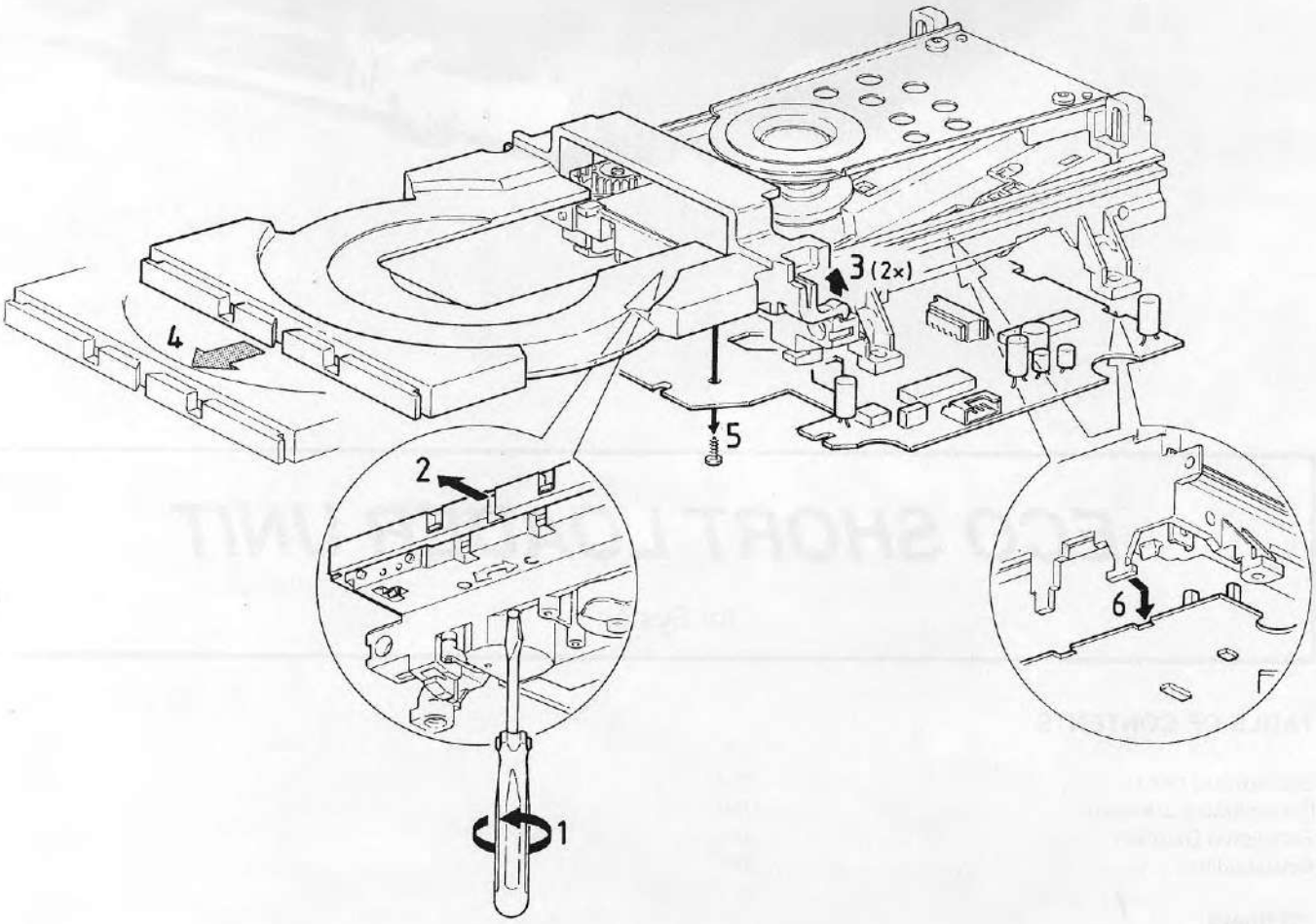

Fig. 1

Assembly of gear

a) Use a pin (e.g. a paperclip) to align the cam wheel (a) withthe gear wheel (b). See Fig. 2.

b) Fix the wheels with the small plastic whashers.

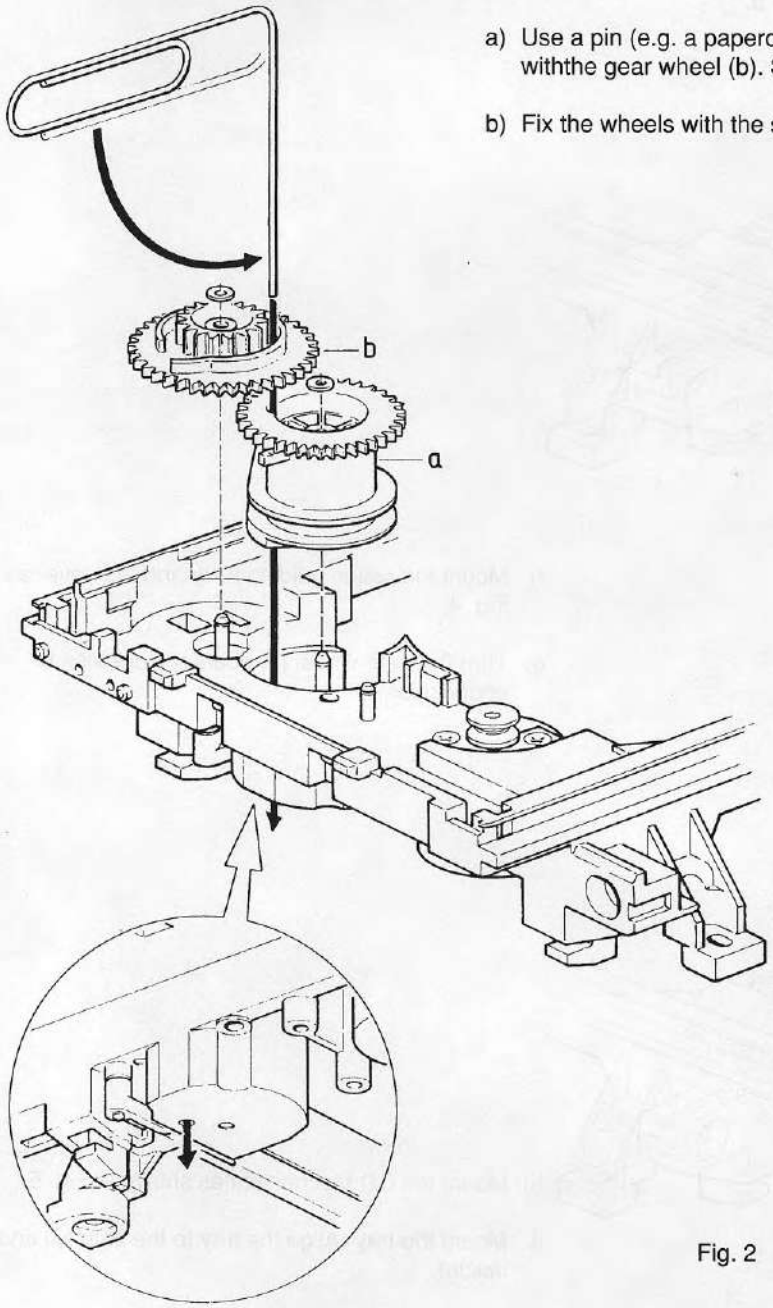

Fig. 2

c) Mount idle wheel 2 (c) and idle wheel 1 (d) in any position. See Fig. 3.

d) Fix the idle wheel 1 (d) with the small plastic whasher.

e) Mount the driving belt.

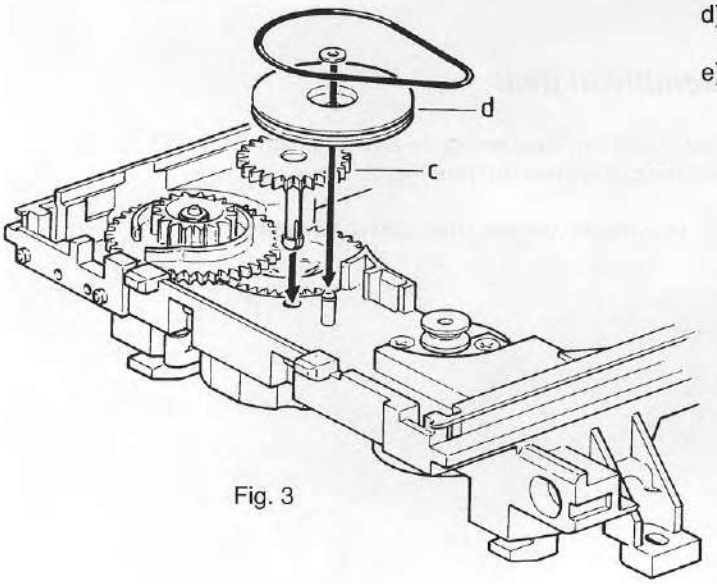

Fig. 3

f) Mount the pinion guiding assy and the cover as shown in Fig. 4.

g) Turn the gear wheel (b) counter clockwise to endposition.

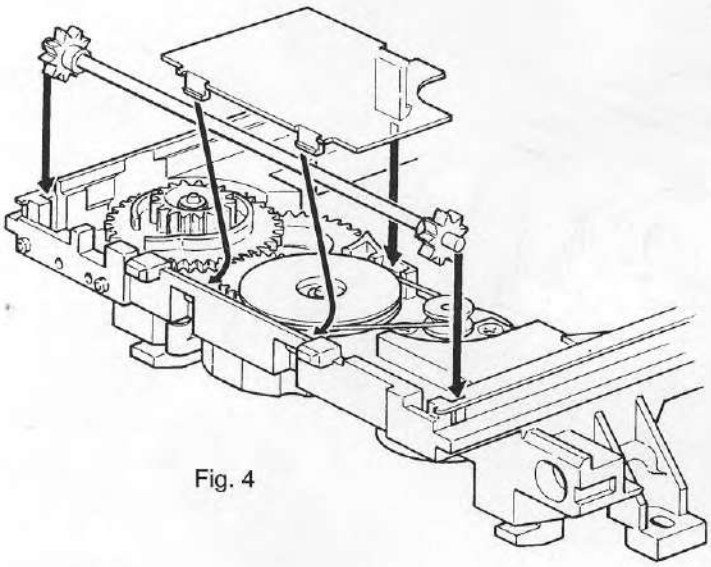

Fig. 4

h) Mount the CD Mechanism as shown in Fig. 5.

i) Mount the tray (Align the tray to the chassis and push it inside).

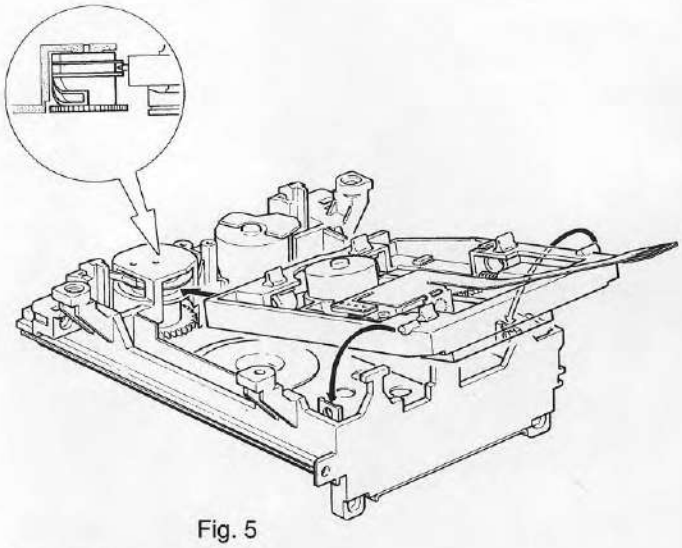

Fig. 5

Check if tray mechanism works correctly!

1) Turn the gear wheel (b) clockwise to its endposition (Use a small screwdriver as shown in Fig. 1 point 1).

   The tray has to move to inner position first and then the CD mechanism has to move to its upper position.

2) Turn the gear wheel (b) counter clockwise to its endposition.

   The CD Mechanism has to move to its lower position first and then the tray has to move outside.

Functional Diagram *ECO Short Loader with CD7*

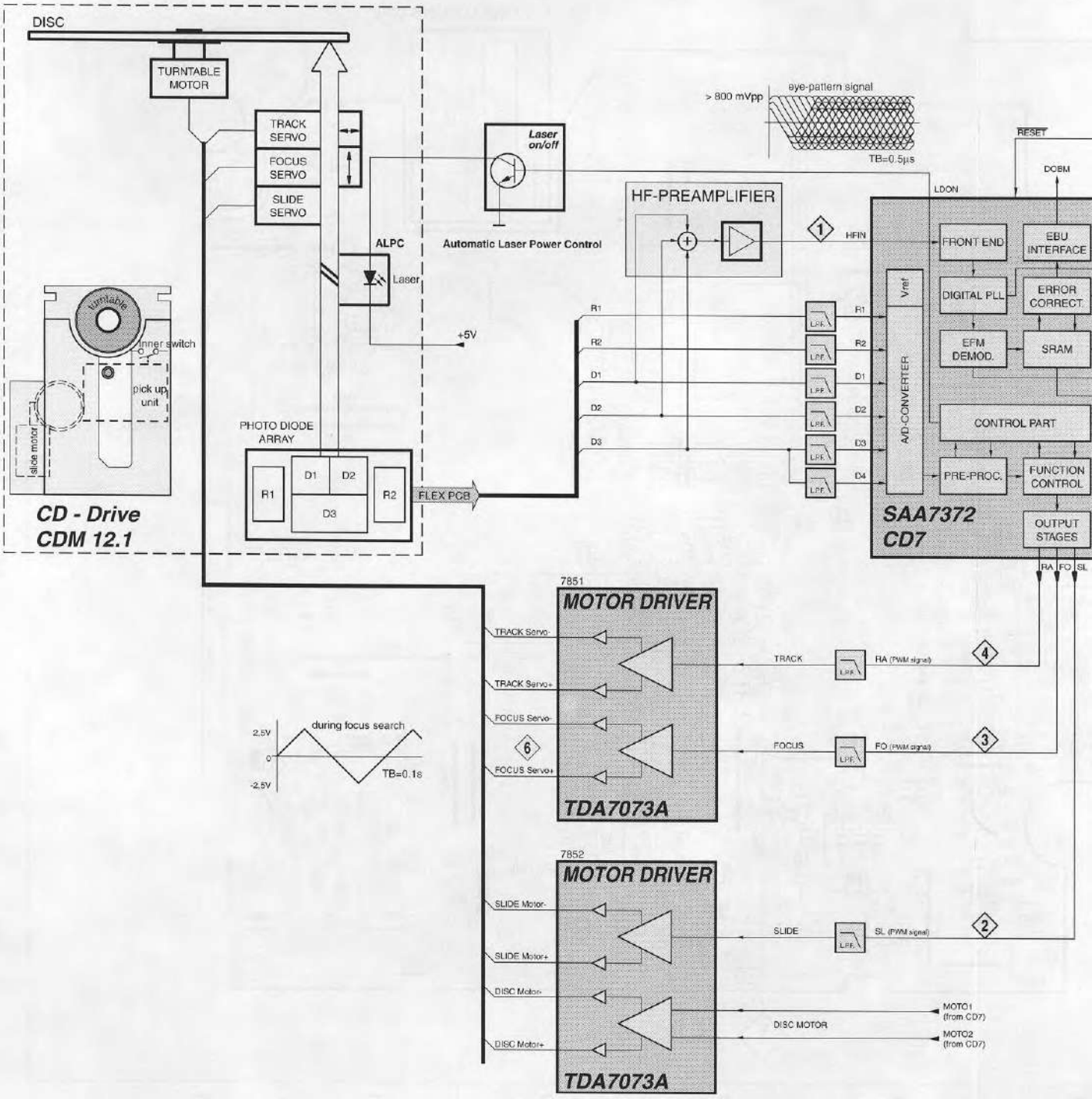

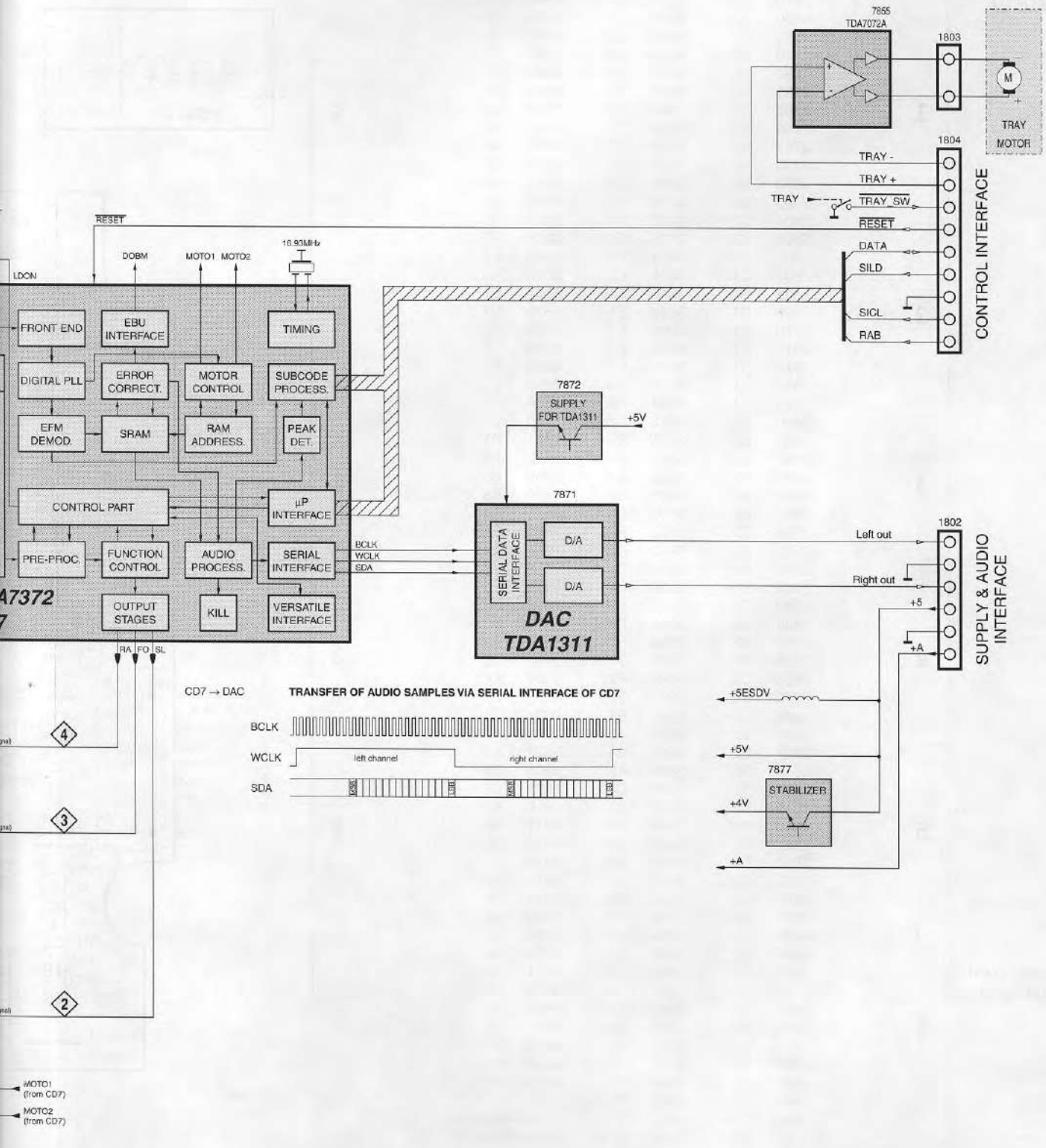

Abbr

SAA73

Pin
1
2
3
4
5
6
7
8
9
10
11
12
13
14
15
16
17
18
19
20
21
22
23
24
25
26
27
28
29
30
31
32
33
34
35
36
37
38
39
40
41
42
43
44
45
46
47
48
49
50
51
52
53
54
55
56
57
58
59
60
61
62
63
64

Abbreviations CD Part

SAA7372 - DECORDER AND DIGITAL SERVO IC CD7

Pin	Name	Direction	Description
1	VSSA1	GND	supply (analog) of CD7
2	VDDA1	+4V	supply (analog) of CD7
3	D1	HF-preamp → CD7	unipolar current input (central diode signal input)
4	D2	HF-preamp → CD7	unipolar current input (central diode signal input)
5	D3	HF-preamp → CD7	unipolar current input (central diode signal input)
6	VRL	GND	reference input for ADC
7	D4	HF-preamp → CD7	unipolar current input (central diode signal input)
8	R1	HF-preamp → CD7	unipolar current input (central diode signal input)
9	R2	HF-preamp → CD7	unipolar current input (central diode signal input)
10	IRET	→ CD7	current reference for calibration ADC
11	VRH	not connected	reference output from ADC
12	VSSA2	GND	supply (analog) of CD7
13	SELPLL	+4V	selects whether internal clock multiplier PLL is used
14	ISLICE	CD7 →	current feedback from data slicer
15	HFIN	→ CD7	comparator signal input
16	VSSA3	GND	supply (analog) of CD7
17	HFREF	→ CD7	comparator common mode input
18	IREF	→ CD7	reference current pin (nom. VDD/2)
19	VDDA2	+4V	supply (analog) of CD7
20	TEST 1	GND	test control input
21	CRIN	X-Tal → CD7	crystal/resonator input
22	CDOUT	X-Tal → CD7	crystal/resonator output
23	TEST 2	GND	test control input
24	CL16	not connected	16.9344MHz system clock output
25	CL11	not connected	11.2896MHz to 5.6448MHz clock output (3-state)
26	RA	CD7 → servo driver	radial actuator output
27	FO	CD7 → servo driver	focus actuator output
28	SL	CD7 → servo driver	slide actuator output
29	TEST3	GND	test control input
30	VDD1P	+4V	supply (digital) of CD7
31	DOBM	CD7 → digital output	bi-phase mark output (3-state)
32	VSS1	GND	supply (digital) of CD7
33	MOTO1	CD7 → servo driver	motor output1 of CD7; versatile (3-state)
34	MOTO2	CD7 → servo driver	motor output2 of CD7; versatile (3-state)
35	SBSY	not connected	subcode block sync (3-state)
36	SFSY	not connected	subcode frame sync (3-state)
37	RCK	GND	subcode clock input
38	SUB	not connected	P to W subcode bits (3-state)
39	VSS2	GND	supply (digital) of CD7
40	V5	not connected	versatile output pin of CD7
41	V4	not connected	versatile output pin of CD7
42	V3	not connected	versatile output pin of CD7 (open drain)
43	KILL	CD7 →	kill output; programmable (open drain)
44	MISC	not connected	C2 error flag; output only defined in CD-ROM modes (3-state)
45	DATA	CD7 → DAC	serial data output (3-state)
46	WCLK	CD7 → DAC	word clock output (3-state)
47	VDD2P	+4V	supply (digital) of CD7
48	BCLK	CD7 → DAC	serial bit clock output (3-state)
49	VSS3	GND	supply (digital) of CD7
50	CL4	not connected	4.2336MHz µP clock output
51	SDA	µP → CD7	µP interface data I/O line (open drain output)
52	SCL	µP → CD7	µP interface clock line
53	RAB	µP → CD7	µP interface R/W and load control line
54	SILD	µP → CD7	µP interface R/W and load control line
55	NC		no connection
56	VSS4	GND	supply (digital) of CD7
57	RESET	µP → CD7	power-on reset input (active low)
58	STATUS	not connected	servo interupt request line /CD7 status register output (open drain)
59	VDD3C	+4V	supply core (digital)
60	C2FAIL	not connected	indication of correction failure (open drain)
61	CFLG	not connected	correction falg output (open drain)
62	V1	→ CD7	verstaile input pin
63	V2	→ CD7	verstaile input pin
64	LDON	CD7 → 7820	laser drive on output (open drain)

COMPACT DISC BOARD Componentside view

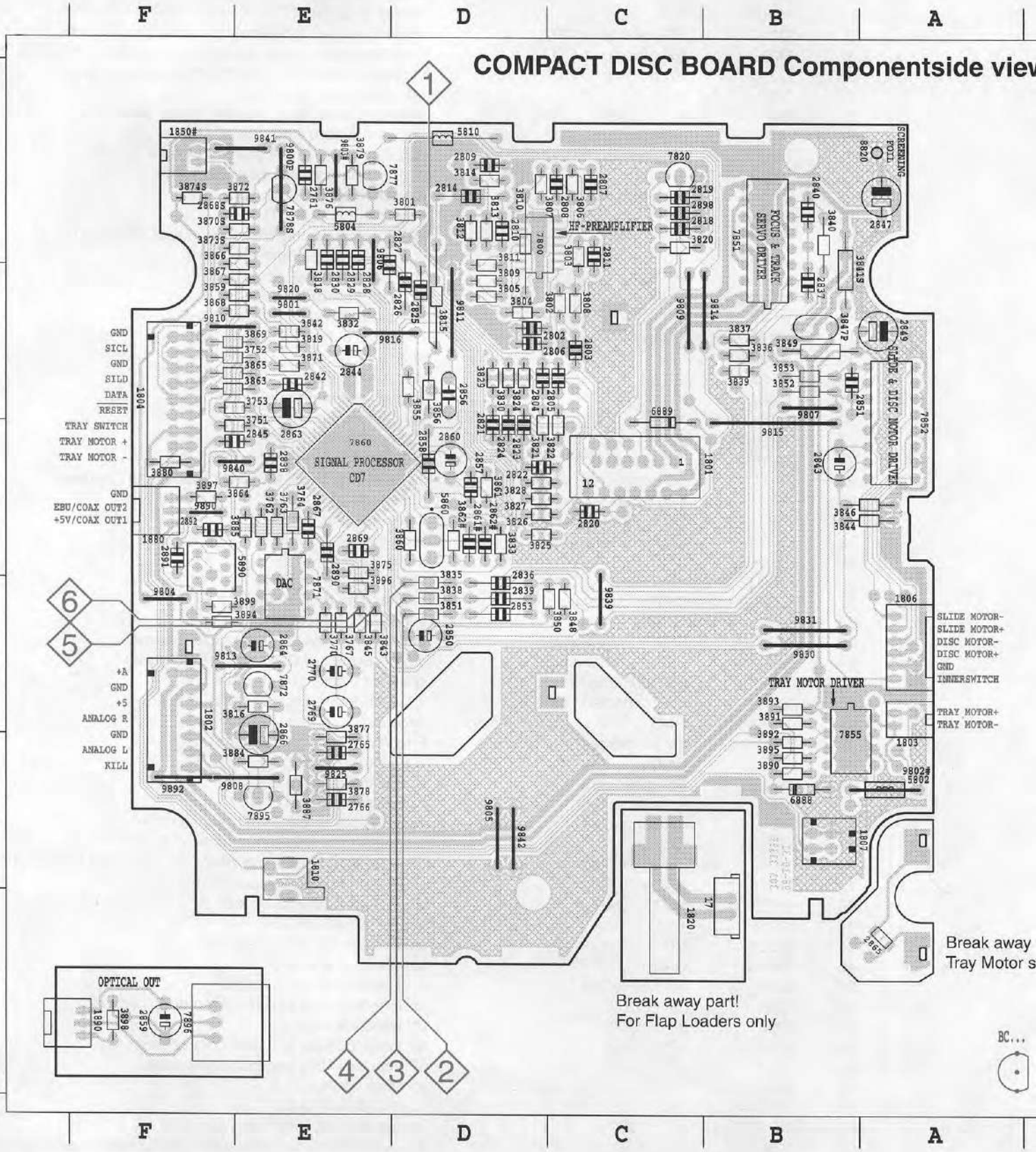

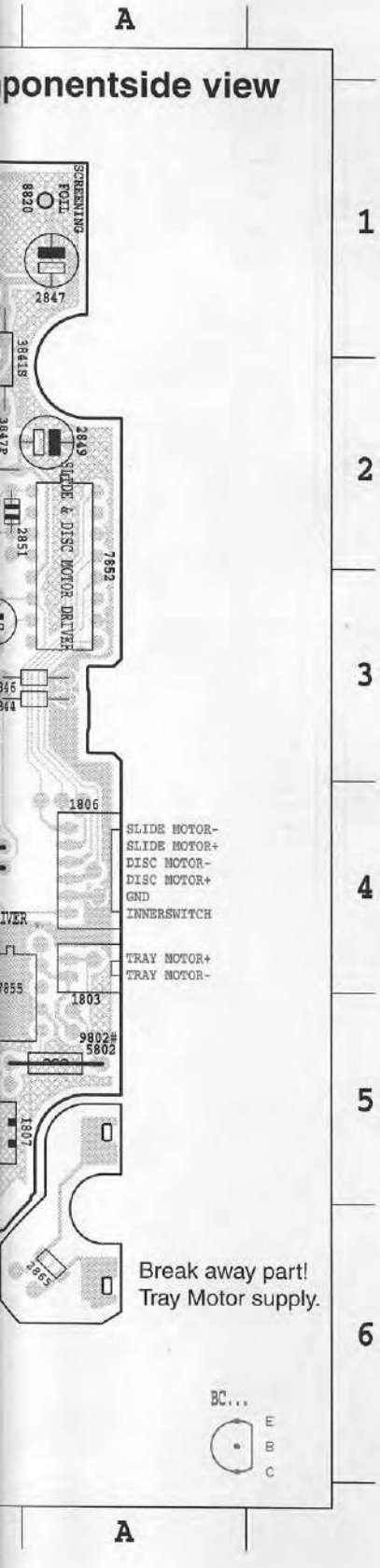

17	B6	3751	F3	3873S	E1
1801	C3	3752	F2	3874S	F1
1802	F4	3753	F2	3875	E3
1803	A4	3762	E3	3876	E1
1804	F2	3763	E3	3877	E5
1806	A4	3764	E3	3878	E5
1807	B5	3767	E4	3879	E1
1810	E5	3770	E4	3880	F3
1820	C5	3801	D1	3884	E5
1850#	F1	3802	C2	3885	E3
1880	F3	3803	C1	3887	E5
1890	F6	3804	D2	3888	F6
2761	E1	3805	D2	3890	B5
2765	E5	3806	C1	3891	B4
2766	E5	3807	D1	3892	B5
2769	E4	3808	C2	3893	B4
2770	E4	3809	D2	3894	F4
2802	D2	3810	D1	3895	B5
2803	C2	3811	D1	3896	E4
2804	D2	3812	D1	3897	F3
2805	C2	3813	D1	3898	F6
2806	D2	3814	D1	3899	F4
2807	C1	3815	D2	5802	A5
2808	C1	3816	E4	5804	E1
2809	D1	3818	E1	5810	D1
2810	D1	3819	E2	5860	D3
2811	C1	3820	C1	5890	F3
2814	D1	3821	D3	6888	B5
2818	C1	3822	C3	6889	C2
2819	C1	3824	D2	7800	D1
2820	C3	3825	D3	7820	C1
2821	D3	3826	D3	7851	B1
2822	D3	3827	D3	7852	A2
2823	D3	3828	D3	7855	B5
2824	D3	3829	D2	7860	E3
2825	D2	3830	D2	7871	E4
2826	D2	3832	E2	7872	E4
2827	E1	3833	D3	7877	E1
2828	E1	3835	D4	7878S	E1
2829	E1	3836	B2	7895	E5
2830	E1	3837	B2	7896	F6
2836	D4	3838	D4	9800P	E1
2837	B2	3839	B2	9801	E2
2838	E3	3840	B1	9803#	E1
2839	D4	3842	E2	9804	F4
2840	B1	3841S	B2	9805	D5
2842	E2	3843	E4	9806	E1
2843	B3	3844	A3	9802#	A5
2844	E2	3845	E4	9807	B2
2845	F3	3846	A3	9808	E5
2847	A1	3848	C4	9809	C2
2849	A2	3847P	B2	9810	F2
2850	D4	3849	B2	9811	D2
2851	B2	3850	C4	9813	E4
2853	D4	3851	D4	9814	B2
2856	D2	3852	B2	9815	B2
2857	D3	3853	B2	9816	E2
2858	D3	3855	D2	9820	E2
2859	F6	3856	D2	9825	E5
2860	D3	3859	E2	9830	B4
2863	E2	3860	D3	9831	B4
2861#	D3	3861	D3	9839	C4
2864	E4	3863	F2	9840	F3
2865	A6	3864	E3	9841	E1
2862#	D3	3862#	D3	9842	D5
2866	E5	3865	F2	9890	F3
2867	E3	3866	E1	9892	F5
2868S	E1	3867	E2		
2869	E3	3868	E2		
2890	E3	3869	F2		
2891	F3	3870S	E1		
2892	F3	3871	E2		
2898	C1	3872	E1		

S = for Systems
P = for Portables
# = provisional

This assembly drawing shows a summary of all possible versions. For components used in a specific version see schematic diagram respectively partslist.

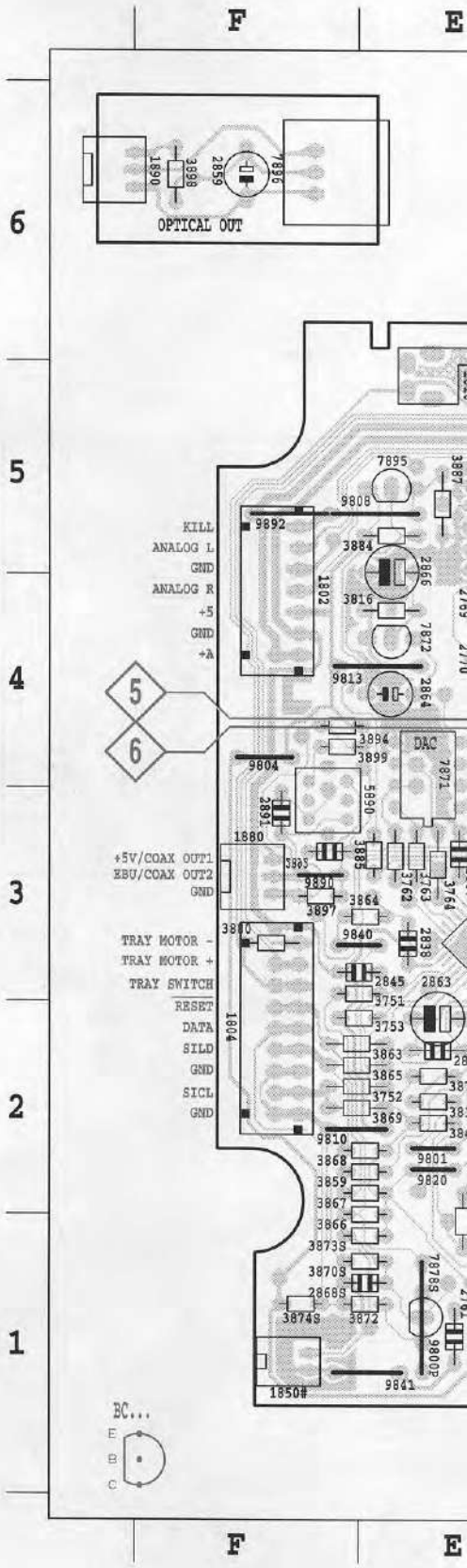

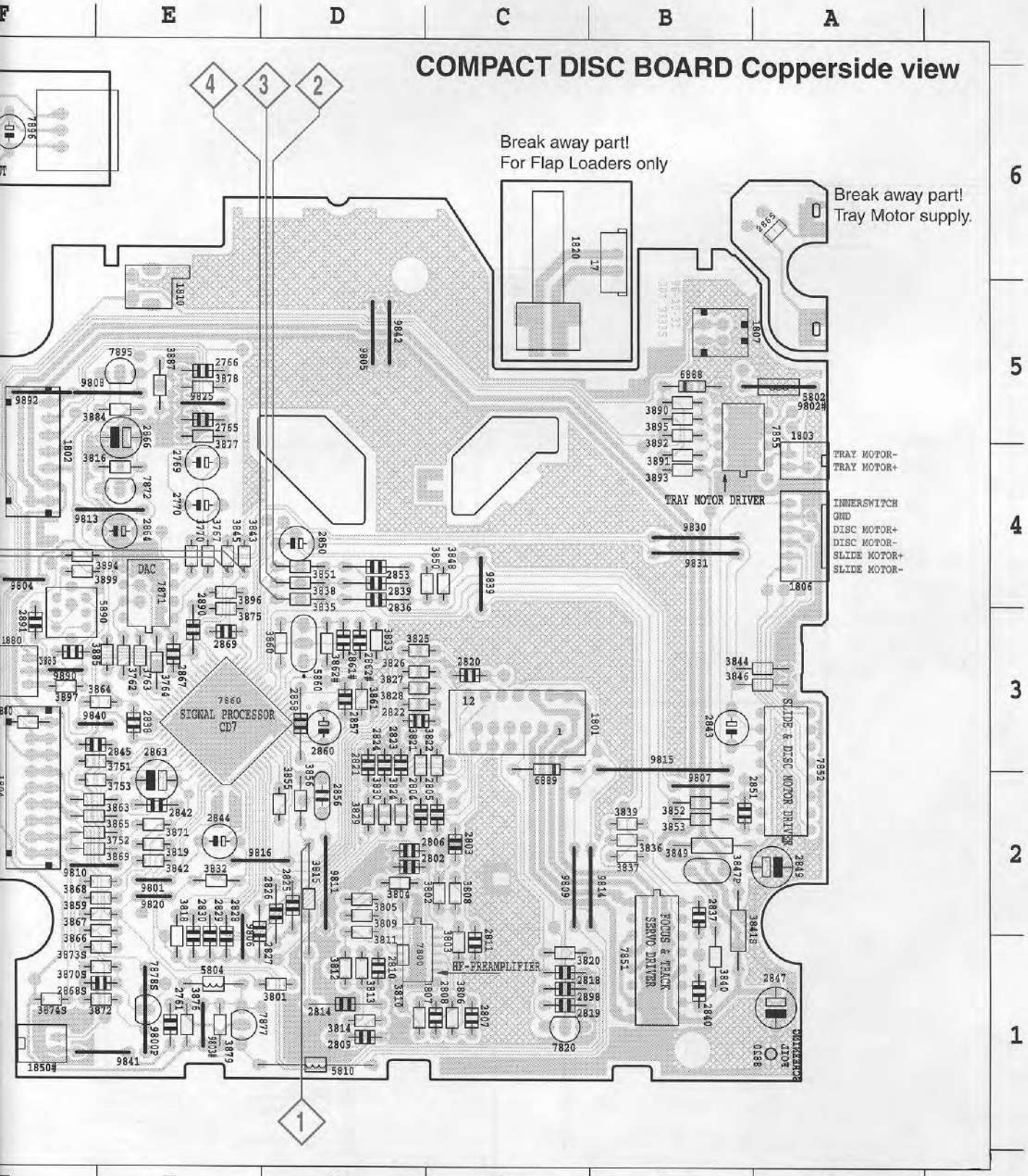
COMPACT DISC BOARD Copperside view
Break away part!
For Flap Loaders only
Break away part!
Tray Motor supply.
TRAY MOTOR-
TRAY MOTOR+
TRAY MOTOR DRIVER
INNERSWITCH
GND
DISC MOTOR+
DISC MOTOR-
SLIDE MOTOR+
SLIDE MOTOR-
SIGNAL PROCESSOR
CD7
DAC
HF-PREAMPLIFIER
FOCUS & TRACK
SERVO DRIVER
SLIDE & DISC MOTOR DRIVER

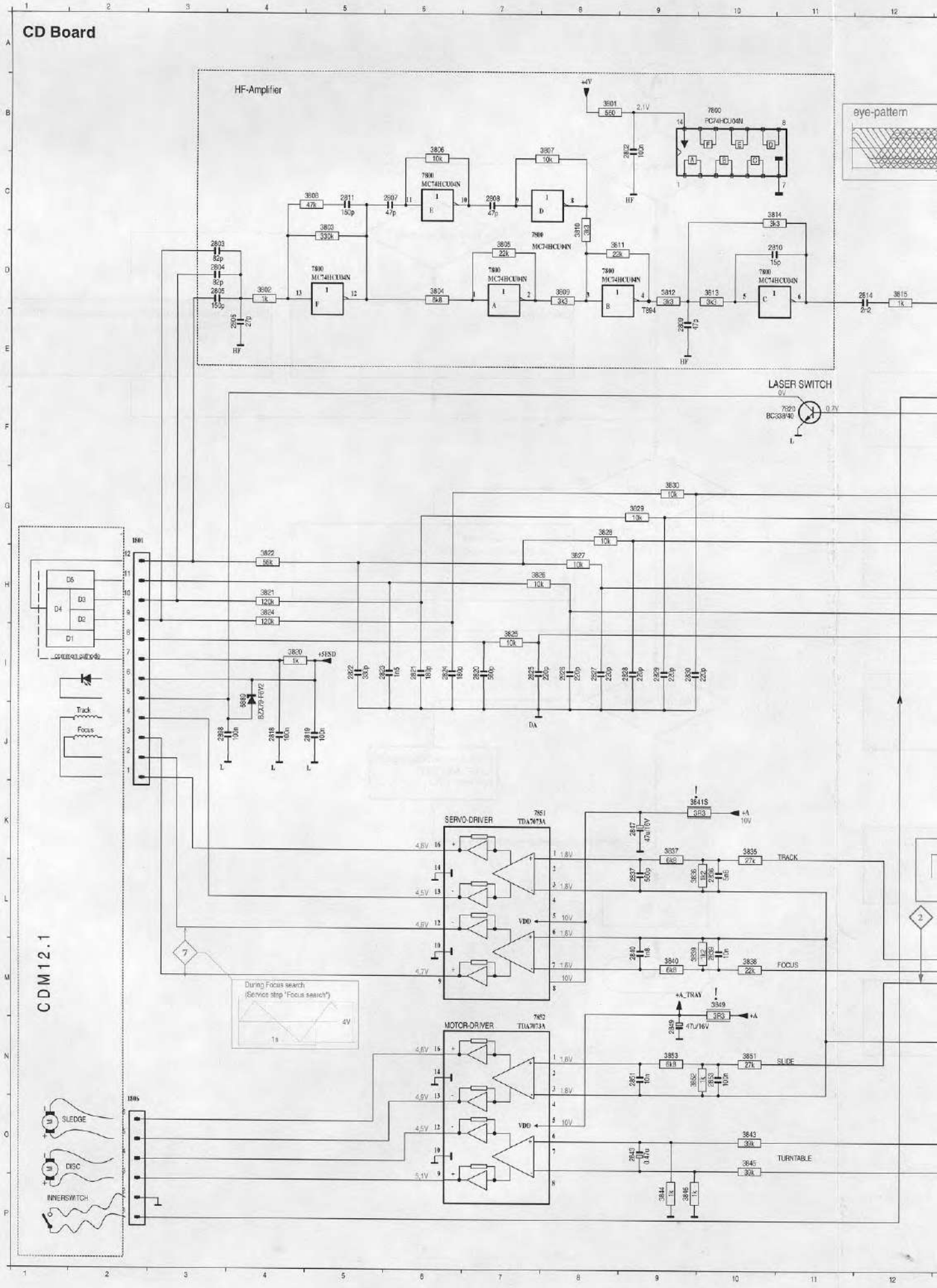
CD Board
HF-Amplifier
eye-pattern
LASER SWITCH
SERVO-DRIVER
MOTOR-DRIVER
TRACK
FOCUS
SLIDE
TURNTABLE
SLEDGE
DISC
INNERSWITCH
Track
Focus
CDM12.1
During Focus search
(Service step "Focus search")

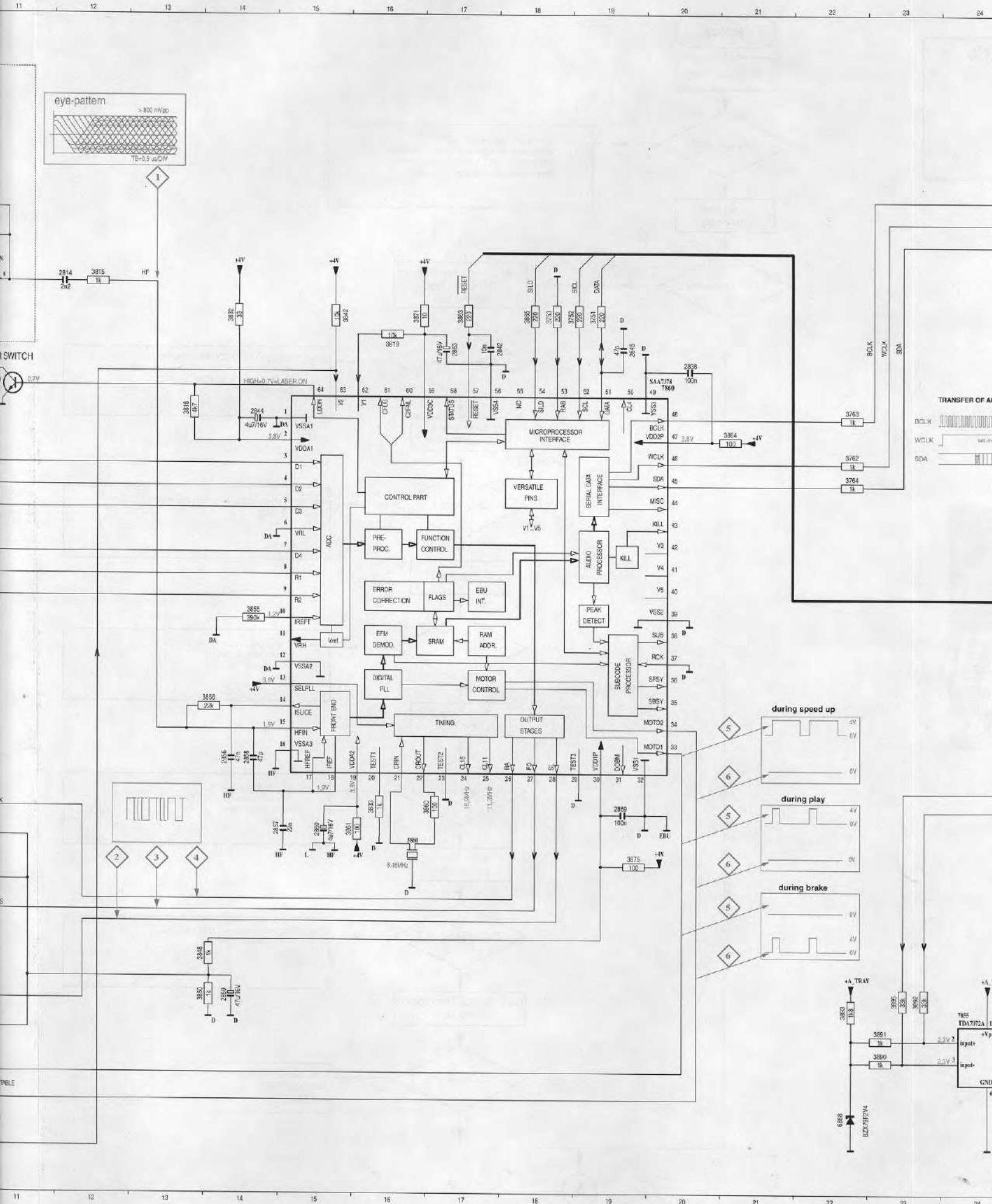
eye-pattern
> 800 mVpp
TB=0,5 us/DIV
SWITCH
HIGH=0.7V=LASER ON
SAA7378
7860
MICROPROCESSOR INTERFACE
CONTROL PART
VERSATILE PINS
SERIAL DATA INTERFACE
ADC
PRE-PROC.
FUNCTION CONTROL
AUDIO PROCESSOR
KILL
ERROR CORRECTION
FLAGS
EBU INT.
PEAK DETECT
EFM DEMOD.
SRAM
RAM ADDR.
SUBCODE PROCESSOR
DIGITAL PLL
MOTOR CONTROL
FRONT END
TIMING
OUTPUT STAGES
Vref
TRANSFER OF AU
BCLK
WCLK
SDA
during speed up
during play
during brake
+A_TRAY
TDA7072A
BZX79/C9V4

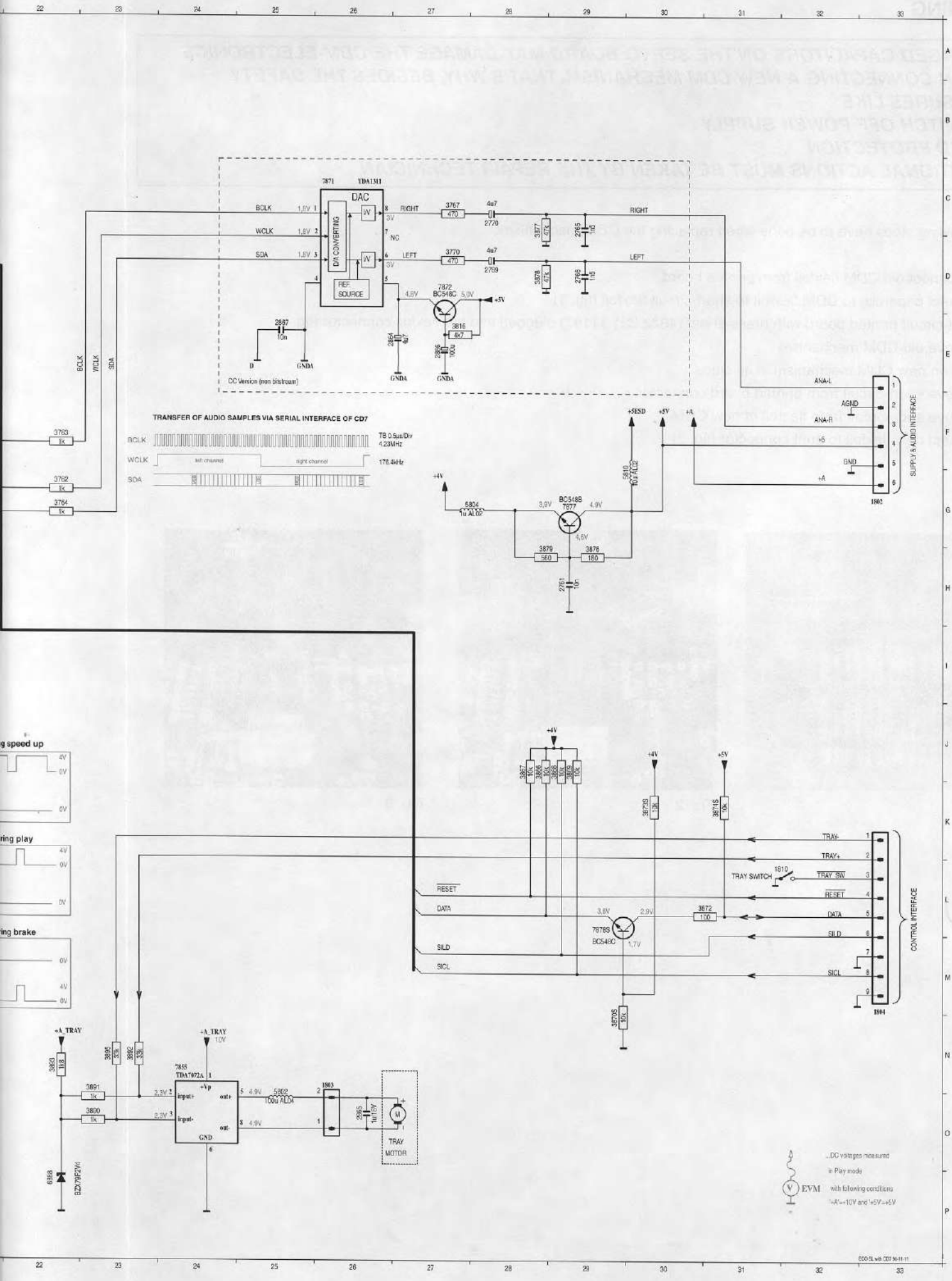
7871 TDA1311
DAC
D/A CONVERTING
REF. SOURCE
BCLK
WCLK
SDA
RIGHT
LEFT
NC
CC Version (non bitstream)
TRANSFER OF AUDIO SAMPLES VIA SERIAL INTERFACE OF CD7
left channel
right channel
SUPPLY & AUDIO INTERFACE
ANA-L
AGND
ANA-R
GND
CONTROL INTERFACE
TRAY-
TRAY+
TRAY SWITCH
TRAY_SW
RESET
DATA
SILD
SICL
TRAY MOTOR
TDA7072A
EVM

WARNING

CHARGED CAPACITORS ON THE SERVO BOARD MAY DAMAGE THE CDM-ELECTRONICS WHEN CONNECTING A NEW CDM MECHANISM. THAT'S WHY, BESIDES THE SAFETY MEASURES LIKE

- ***SWITCH OFF POWER SUPPLY***
- ***ESD PROTECTION***

ADDITIONAL ACTIONS MUST BE TAKEN BY THE REPAIR TECHNICIAN.

The following steps have to be done when replacing the CDM mechanism:

1. Disconnect old CDM flexfoil from printed board
2. Connect paperclip to CDM flexfoil to short-circuit flexfoil (fig. 1)
3. Short-circuit printed board with brass-sheet (4822 321 11197) plugged into the flexfoil connector (fig. 2)
4. Remove old CDM mechanism
5. Position new CDM mechanism in its studs
6. Remove short-circuit from printed board connector
7. Remove shor-circuit from flexfoil of new CDM
8. Connect new flexfoil to print connector (fig. 3)

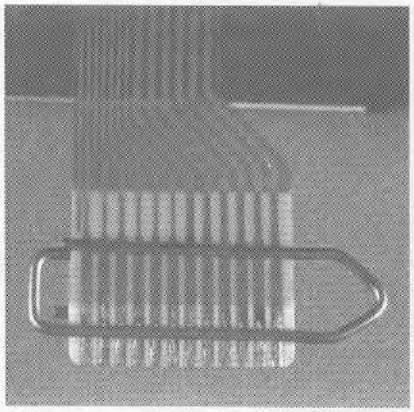

Fig. 1

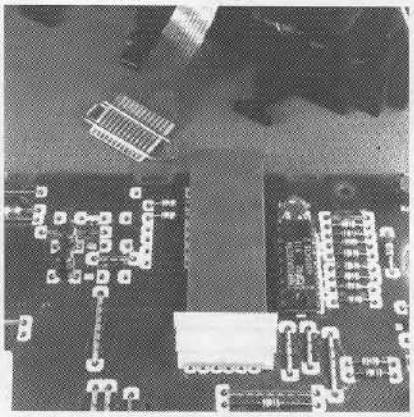

Fig. 2

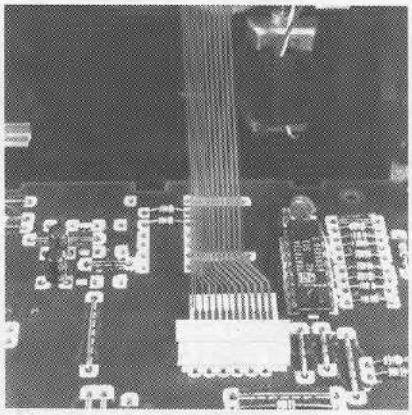

Fig. 3

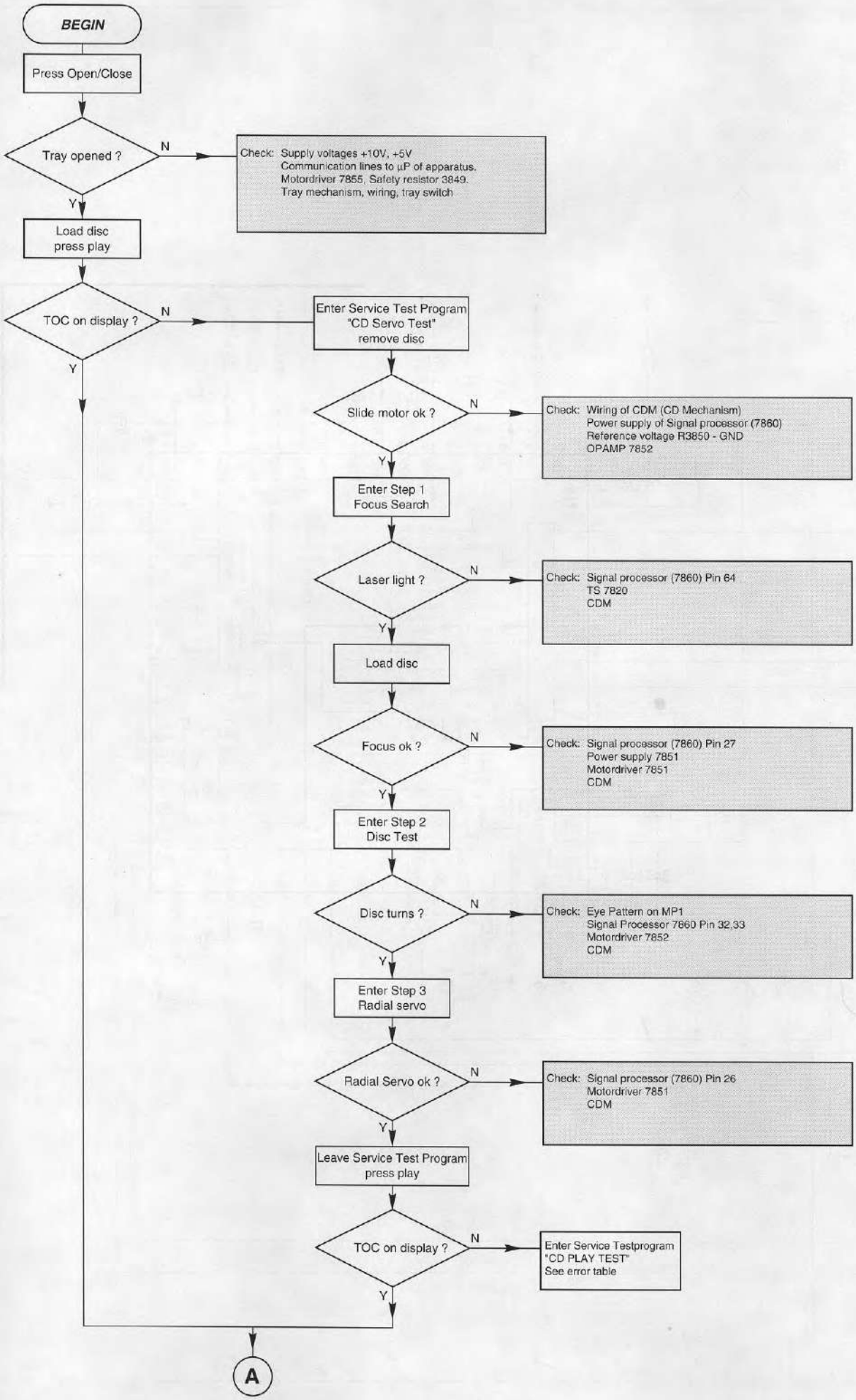
BEGIN
Press Open/Close
Tray opened ?
N
Check: Supply voltages +10V, +5V
Communication lines to µP of apparatus.
Motordriver 7855, Safety resistor 3849.
Tray mechanism, wiring, tray switch
Y
Load disc
press play
TOC on display ?
N
Enter Service Test Program
"CD Servo Test"
remove disc
Y
Slide motor ok ?
N
Check: Wiring of CDM (CD Mechanism)
Power supply of Signal processor (7860)
Reference voltage R3850 - GND
OPAMP 7852
Y
Enter Step 1
Focus Search
Laser light ?
N
Check: Signal processor (7860) Pin 64
TS 7820
CDM
Y
Load disc
Focus ok ?
N
Check: Signal processor (7860) Pin 27
Power supply 7851
Motordriver 7851
CDM
Y
Enter Step 2
Disc Test
Disc turns ?
N
Check: Eye Pattern on MP1
Signal Processor 7860 Pin 32,33
Motordriver 7852
CDM
Y
Enter Step 3
Radial servo
Radial Servo ok ?
N
Check: Signal processor (7860) Pin 26
Motordriver 7851
CDM
Y
Leave Service Test Program
press play
TOC on display ?
N
Enter Service Testprogram
"CD PLAY TEST"
See error table
Y
A

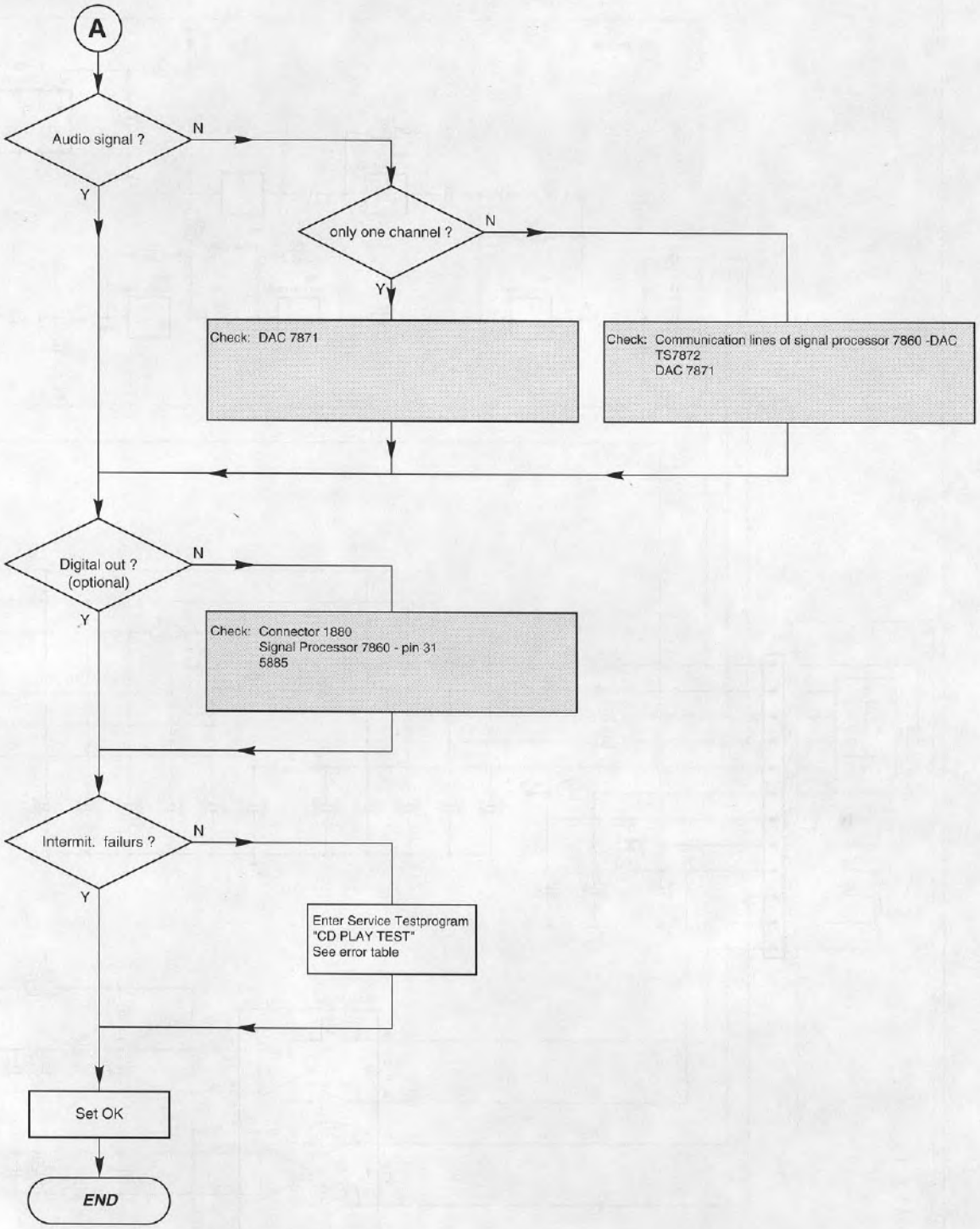
A
Audio signal ?
N
Y
only one channel ?
N
Y
Check: DAC 7871
Check: Communication lines of signal processor 7860 -DAC
TS7872
DAC 7871
Digital out ?
(optional)
N
Y
Check: Connector 1880
Signal Processor 7860 - pin 31
5885
Intermit. failurs ?
N
Y
Enter Service Testprogram
"CD PLAY TEST"
See error table
Set OK
END

Exploded view CD Short

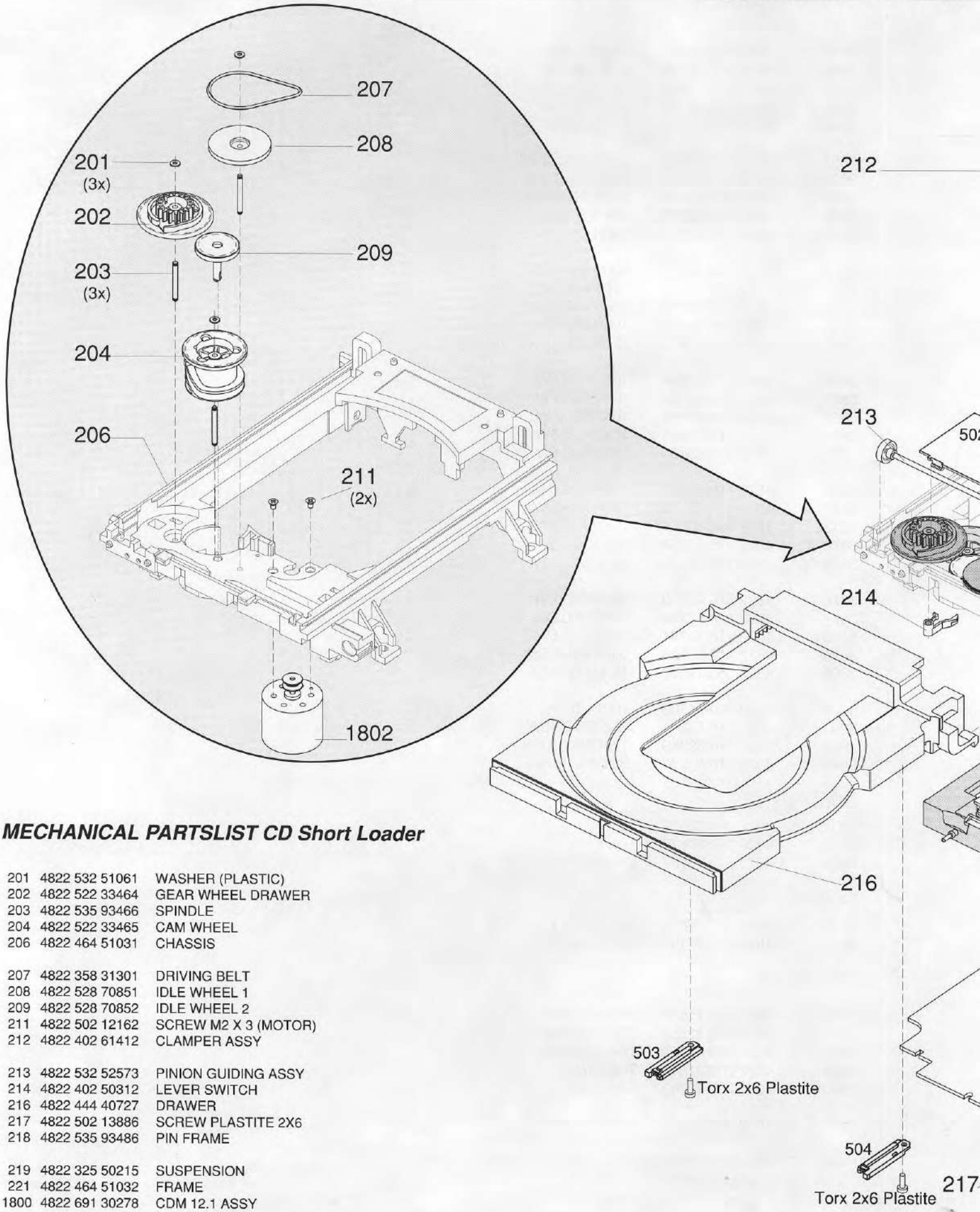

MECHANICAL PARTSLIST CD Short Loader

201	4822 532 51061	WASHER (PLASTIC)
202	4822 522 33464	GEAR WHEEL DRAWER
203	4822 535 93466	SPINDLE
204	4822 522 33465	CAM WHEEL
206	4822 464 51031	CHASSIS
207	4822 358 31301	DRIVING BELT
208	4822 528 70851	IDLE WHEEL 1
209	4822 528 70852	IDLE WHEEL 2
211	4822 502 12162	SCREW M2 X 3 (MOTOR)
212	4822 402 61412	CLAMPER ASSY
213	4822 532 52573	PINION GUIDING ASSY
214	4822 402 50312	LEVER SWITCH
216	4822 444 40727	DRAWER
217	4822 502 13886	SCREW PLASTITE 2X6
218	4822 535 93486	PIN FRAME
219	4822 325 50215	SUSPENSION
221	4822 464 51032	FRAME
1800	4822 691 30278	CDM 12.1 ASSY
1802	4822 361 21708	MOTOR ASSY
	4822 502 30735	SCREW 3 X 6 PLASTITE

ded view CD Short Loader

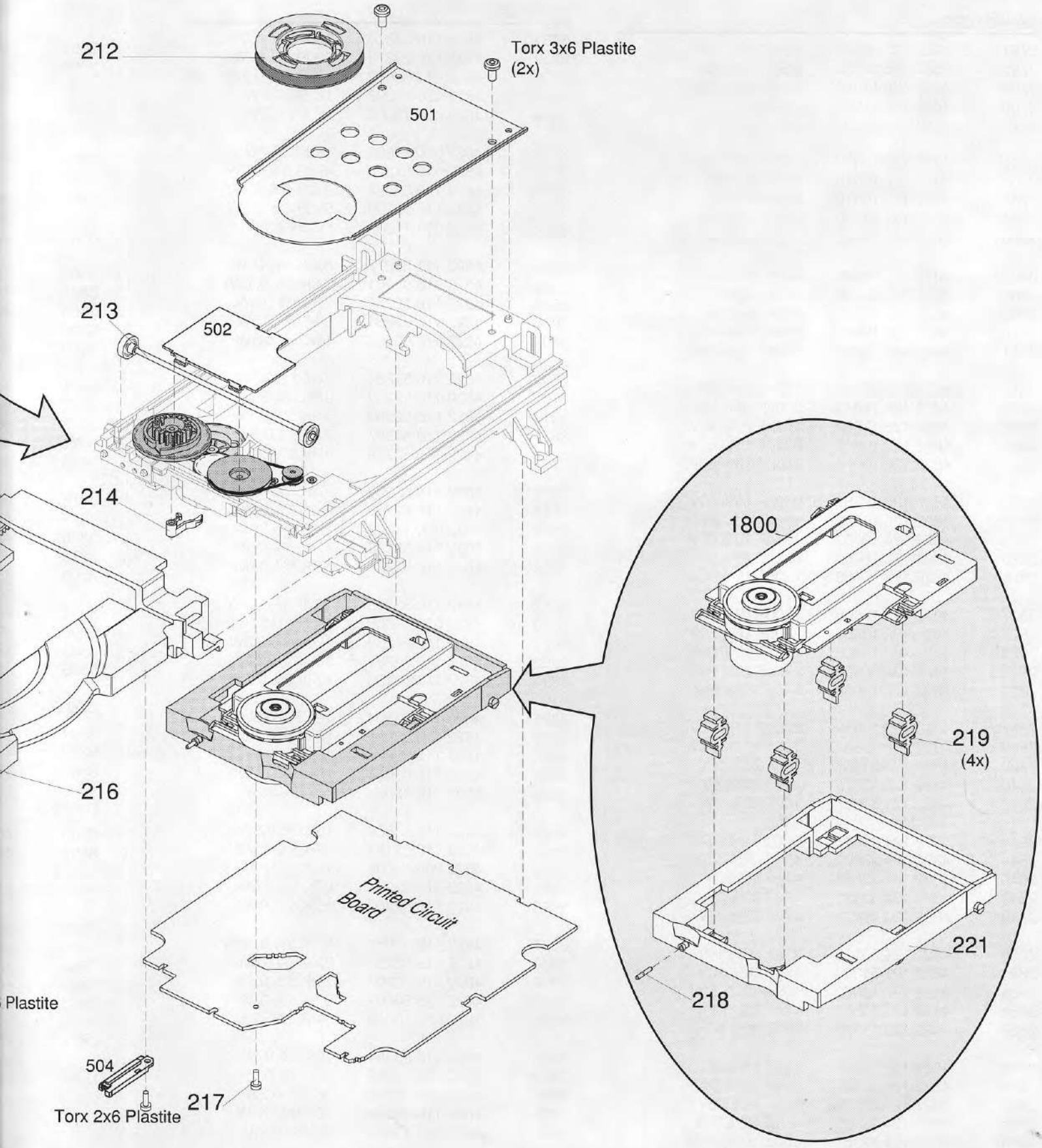

ELECTRICAL PARTS LIST - CD BOARD

MISCELLANEOUS

1801	4822 267 51453	Flex foil connector 12 pin
1804	5322 265 40945	Connector 9pin
1810	4822 276 13503	Tray Switch

CAPACITORS

2761	4822 121 51387	10nF 20% 16V
2765	4822 126 12878	1,5nF 10% 16V
2766	4822 126 12878	1,5nF 10% 16V
2769	4822 124 41969	1µF 20% 50V
2770	4822 124 23401	4,7µF 20% 25V
2802	4822 126 12882	100nF 20% 50V
2803	4822 122 10319	82pF 5% 50V
2804	4822 122 10319	82pF 5% 50V
2805	4822 122 33849	150pF 10% 50V
2806	4822 122 33192	27pF 5% 50V
2807	4822 122 33848	47pF 5% 50V
2808	4822 122 33848	47pF 5% 50V
2809	4822 122 33848	47pF 5% 50V
2810	4822 122 10462	15pF 5% 50V
2811	4822 122 33849	150pF 10% 50V
2814	4822 126 12339	2,2nF 10% 16V
2818	4822 126 12882	100nF 20% 50V
2819	4822 126 12882	100nF 20% 50V
2820	4822 122 10459	560pF 10% 50V
2821	4822 126 10053	180pF 10% 50V
2822	4822 126 12787	330pF 10% 50V
2823	4822 126 12878	1,5nF 10% 16V
2824	4822 126 10053	180pF 10% 50V
2825	4822 122 10466	220pF 10% 50V
2826	4822 122 10466	220pF 10% 50V
2827	4822 122 10466	220pF 10% 50V
2828	4822 122 10466	220pF 10% 50V
2829	4822 122 10466	220pF 10% 50V
2830	4822 122 10466	220pF 10% 50V
2836	4822 126 13098	5,6nF 20% 16V
2837	4822 122 10459	560pF 10% 50V
2838	4822 126 12882	100nF 20% 50V
2839	4822 121 51387	10nF 20% 16V
2840	4822 122 10576	1,8nF 10% 16V
2842	4822 121 51387	10nF 20% 16V
2843	5322 124 41948	0,47µF 20% 50V
2844	4822 124 23401	4,7µF 20% 25V
2845	4822 122 33848	47pF 5% 50V
2847	4822 124 40433	47µF 20% 25V
2849	4822 124 40433	47µF 20% 25V
2850	4822 124 23178	47µF 20% 16V
2851	4822 121 51387	10nF 20% 16V
2853	4822 126 12882	100nF 20% 50V
2856	4822 121 43526	47nF 5% 100V
2857	4822 126 11585	22nF 20% 50V
2858	4822 122 33848	47pF 5% 50V
2860	4822 124 23401	4.7µF 20% 25V
2863	4822 124 23178	47µF 20% 16V
2864	4822 124 23401	4.7µF 20% 25V
2866	4822 124 23264	100µF 20% 6,3V
2898	4822 121 51387	10nF 10% 16V
2869	4822 126 12882	100nF 20% 50V
2898	4822 126 12882	100nF 20% 50V

RESISTORS

3751	4822 116 83872	220R 5% 0,5W
3752	4822 116 83872	220R 5% 0,5W
3753	4822 116 83872	220R 5% 0,5W
3762	4822 050 11002	1K 5% 0,2W
3763	4822 050 11002	1K 5% 0,2W
3764	4822 050 11002	1K 5% 0,2W
3767	4822 116 52224	470R 5% 0,5W
3770	4822 116 52224	470R 5% 0,5W
3801	4822 116 52226	560R 5% 0,5W
3802	4822 050 11002	1K 5% 0,2W
3803	4822 116 52272	330K 5% 0,5W
3804	4822 116 83961	6,8K 5% 0,16W
3805	4822 116 52257	22K 5% 0,5W
3806	4822 116 83864	10K 5% 0,5W
3807	4822 116 83864	10K 5% 0,5W
3808	4822 116 52284	47K 5% 0,5W
3809	4822 116 52269	3,3K 5% 0,5W
3810	4822 116 52269	3,3K 5% 0,5W
3811	4822 116 52257	22K 5% 0,5W
3812	4822 116 52269	3,3K 5% 0,5W
3813	4822 116 52269	3,3K 5% 0,5W
3814	4822 116 52269	3,3K 5% 0,5W
3815	4822 050 11002	1K 5% 0,2W
3816	4822 116 52283	4,7K 5% 0,5W
3818	4822 116 52283	4,7K 5% 0,5W
3819	4822 116 83868	150R 5% 0,5W
3820	4822 050 11002	1K 5% 0,2W
3821	4822 116 52239	120k 5% 0,5W
3822	4822 116 52291	56k 5% 0,5W
3824	4822 116 52239	120k 5% 0,5W
3825	4822 116 83864	10k 5% 0,5W
3826	4822 116 83864	10k 5% 0,5W
3827	4822 116 83864	10k 5% 0,5W
3828	4822 116 83864	10k 5% 0,5W
3829	4822 116 83864	10k 5% 0,5W
3830	4822 116 83864	10k 5% 0,5W
3832	4822 116 52191	33R 5% 0,5W
3833	4822 050 11002	1K 5% 0,2W
3835	4822 116 52264	27K 5% 0,5W
3836	4822 116 52207	1,2K 5% 0,5W
3837	4822 116 83961	6,8K 5% 0,16W
3838	4822 116 52257	22K 5% 0,5W
3839	4822 116 52207	1,2K 5% 0,5W
3840	4822 116 83961	6,8K 5% 0,16W
3841	4822 052 10338	3,3R NFR25
3842	4822 116 83864	10K 5% 0,5W
3843	4822 116 83882	39K 5% 0,5W
3844	4822 050 11002	1K 5% 0,2W
3845	4822 116 83882	39K 5% 0,5W
3846	4822 050 11002	1K 5% 0,2W

3848	48
3849	48
3850	48
3851	48
3852	48
3853	48
3855	48
3856	48
3859	48
3860	48
3861	48
3862	48
3863	48
3864	48
3865	48
3866	48
3867	48
3868	48
3869	48
3870	48
3871	48
3872	48
3873	48
3874	48
3875	48
3876	48
3877	48
3878	48
3879	48
3890	48
3891	48
3892	48
3893	48
3895	48

COILS

5804	48
5810	48
5860	48

DIODES

6888	48
6889	48

TRANSISTORS

7820	53
7851	48
7852	48
7855	48
7860	48
7871	48

Note : Only t
servic

ELECTRICAL PARTS LIST - CD BOARD

3848	4822 050 11002	1K 5% 0,2W
3849	4822 052 10338	3,3R NFR25
3850	4822 050 11002	1K 5% 0,2W
3851	4822 116 52264	27K 5% 0,5W
3852	4822 050 11002	1K 5% 0,2W
3853	4822 116 83961	6,8K 5% 0,16W
3855	4822 116 52278	390K 5% 0,5W
3856	4822 051 20154	150K 5% 0,5W
3859	4822 116 52257	22K 5% 0,5W
3860	4822 116 52175	100R 5% 0,5W
3861	4822 116 52175	100R 5% 0,5W
3862	4822 116 52235	1M 5% 0,5W
3863	4822 116 83872	220R 5% 0,5W
3864	4822 116 52175	100R 5% 0,5W
3865	4822 116 83872	220R 5% 0,5W
3866	4822 116 83864	10K 5% 0,5W
3867	4822 116 83864	10K 5% 0,5W
3868	4822 116 83864	10K 5% 0,5W
3869	4822 116 83864	10K 5% 0,5W
3870	4822 116 83864	10K 5% 0,5W
3871	4822 116 52176	10R 5% 0,5W
3872	4822 116 52175	100R 5% 0,5W
3873	4822 116 83864	10K 5% 0,5W
3874	4822 116 83864	10K 5% 0,5W
3875	4822 116 52175	100R 5% 0,5W
3876	4822 116 52213	180R 5% 0,5W
3877	4822 116 52284	47K 5% 0,5W
3878	4822 116 52284	47K 5% 0,5W
3879	4822 116 52226	560R 5% 0,5W
3890	4822 050 11002	1K 5% 0,2W
3891	4822 050 11002	1K 5% 0,2W
3892	4822 116 52271	33K 5% 0,16W
3893	4822 116 52249	1,8K 5% 0,16W
3895	4822 116 52271	33K 5% 0,16W

COILS

5804	4822 157 53302	1µH
5810	4822 152 20677	10µH
5860	4822 242 73557	Ceramic Res. 8,46MHz

DIODES

6888	4822 130 80655	BZX79-F2V4
6889	4822 130 34167	BZX79-B6V2

TRANSISTORS

7820	5322 209 11517	PC74HCU04T
7851	4822 209 32852	TDA7073A/N2
7852	4822 209 32852	TDA7073A/N2
7855	4822 209 31519	TDA7072A
7860	4822 209 12752	SAA7378GP
7871	4822 209 32421	TDA1311A/N2

Note : Only the parts mentioned in this list are normal service spare parts.

POWER BOARD

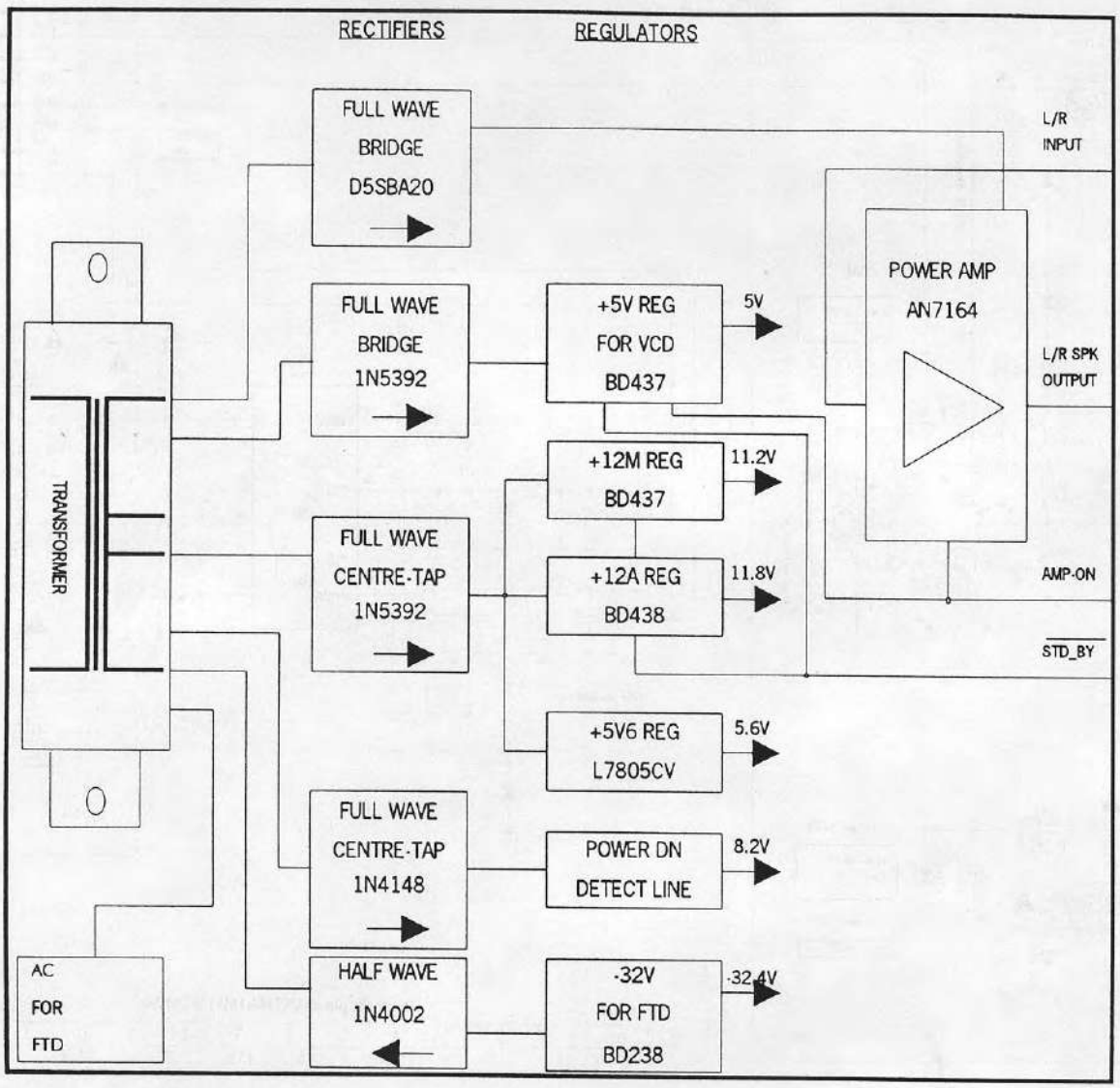

WARNING : *If the power amplifier heatsink is not attached to the power amplifier during testing, do not make the amplifier deliver more than 500mW per channel. It is advisable to inject signal one channel at a time whenever possible and to remove all input signal immediately after test.*

CONNECTOR 12 TO 1210

o	1	PA	AC input to power amplifier rectifier
o	2	PA	AC input to power amplifier rectifier *[Note:Pin1 is shorted to Pin 2]*
o	3	PA	AC input to power amplifier rectifier
o	4	PA	AC input to power amplifier rectifier *[Note:Pin 3 is shorted to Pin 4]*
o	5	+12V/+5V6	AC input to +12V & +5V6 rectifier
o	6	GND	Centre-tap of secondary winding of Pin 5 ,7 and 8
o	7	+12V/+5V6	AC input to +12V & +5V6 rectifier
o	8	-35V	AC input to FTD rectifier
o	9	FTD	FTD filament voltage
o	10	FTD	FTD filament voltage

CONNECTOR 1222 — FTD SUPPLY AND uP CONTROL SIGNALS

o	1	STDBY	Standby signal from microprocessor
o	2	~F1	AC voltage for FTD filament
o	3	~F2	AC voltage for FTD filament
o	4	-32V	-32.4V voltage for FTD grid
o	5	PWD DN	Power down signal to microprocessor

CONNECTOR 1223 — AF SIGNAL AND SUPPLY

o	1	L	Left input for power amplifier
o	2	⊥ a	AF ground
o	3	R	Right input for power amplifier
o	4	AMP_ON	Control from up to switch power amplifier and VCD regulator to standby
o	5	+12M	+12V for tapedeck motors and CD mechanisms
o	6	⊥ B	Ground for +12A
o	7	+12A	+12V for analog circuitries
o	8	⊥ D	Motor and Digital ground
o	9	+5V6	+5V6 for set uP and VCD uP

CONNECTOR 1224 — AF SIGNAL AND SUPPLY *[OPTION]*

[Connections as 1223 but with digital ground and motor ground seperated]

o	1	L	Left input for power amplifier
o	2	⊥ a	AF ground
o	3	R	Right input for power amplifier
o	4	AMP_ON	Control from uP to switch power amplifier and VCD regulator to standby
o	5	+12A	+12V for analog circuitries
o	6	⊥ B	Ground for +12A
o	7	+12M	+12V for tapedeck motors and CD mechanisms
o	8	⊥ M	Motor ground
o	9	+5V6	+5V6 for set up and VCD up
o	10	⊥ D	Digital ground

CONNECTOR 1237 — VCD SUPPLY *[OPTION]*

o	1	+VCD	+5V for VCD module
o	2	+VCD	+5V for VCD module
o	3	+Vsl	+5V for VCD uP-SRAM
o	4	GND	Ground
o	5	GND	Ground
o	6	+VA	+12V for VCD servo drivers

CONNECTOR 13 TO 1231 *[OPTION]*

o	1	VCD	AC input to VCD rectifier
o	2	VCD	AC input to VCD rectifier

12	C 8
1201	E 1
1202	D 3
1205	E 1
1206	C 6
1208	F 6
1210	C 7
1211	D 6
1212	E 6
1222	L11
1223	D22
1224	D23
1231	F 7
1237	A22
1290	G23
13	F 8
14	C 6
2220	A 9
2221	A10
2222	B10
2224	B11
2225	B11
2230	C 9
2231	C10
2232	D11
2233	D11
2234	B14
2235	A16
2239	H22
2240	E10
2241	C13
2242	C14
2243	G11
2245	E11
2246	F12
2247	E14
2248	E14
2249	J14
2250	J14
2251	H10
2252	G16
2253	F14
2254	H10
2261	I 9
2262	I10
2263	J10
2264	D13
2265	E23
2266	G23
2267	G19
2271	F18
2272	G17
2273	F18
2274	G18
2281	F19
2282	G18
2283	F21
2284	G21
2285	E21
2286	G21
2287	F22
2288	G22
2289	E22
2290	G22
2291	F19
2292	F19
2293	H19
2295	H19
2296	G19
2297	F19
2298	G19
3201	F 1
3204	E 6
3211	F15
3212	F15
3214	G15
3215	G15
3216	H12
3217	H12
3231	A16
3241	D13
3242	E12
3243	E12
3244	E12
3245	E11
3246	F11
3247	F12
3248	E13
3249	E14
3250	F14
3251	F 9
3252	F10
3255	F13
3256	G13
3258	F15
3260	G15
3261	I10
3262	J11
3263	J11
3264	K12
3265	K 9
3266	K 9
3267	I13
3268	J13
3269	J13
3270	J13
3271	E21
3272	G21
3276	E19
3277	H18
3281	F17
3282	G17
3283	F17
3284	G17
3287	F18
3288	G18
3289	F18
3290	G18
3293	E21
3294	G21

POWER CIRCUIT

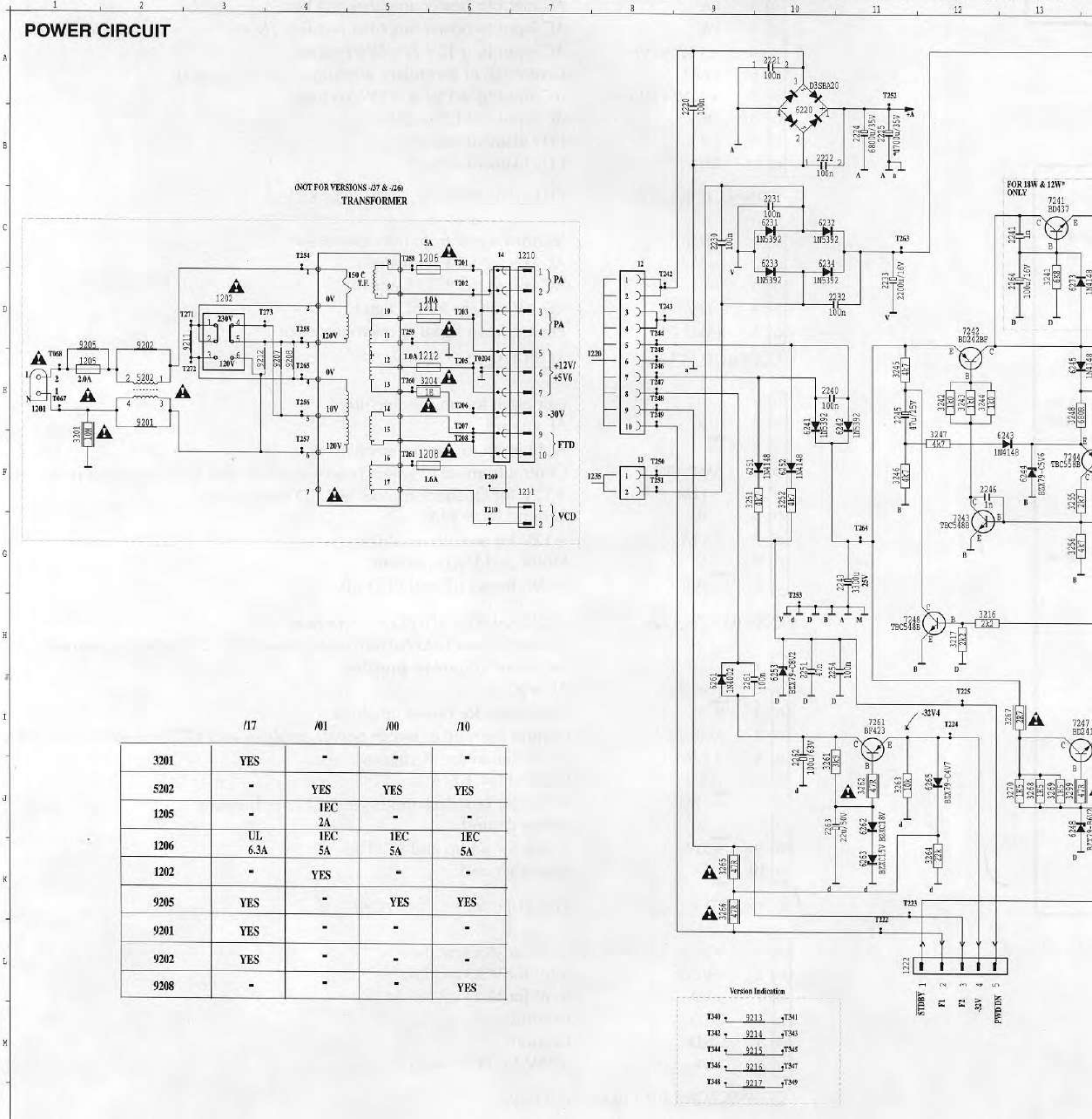

	/17	/01	/00	/10
3201	YES	-	-	-
5202	-	YES	YES	YES
1205	-	1EC 2A	-	-
1206	UL 6.3A	1EC 5A	1EC 5A	1EC 5A
1202	-	YES	-	-
9205	YES	-	YES	YES
9201	YES	-	-	-
9202	YES	-	-	-
9208	-	-	-	YES

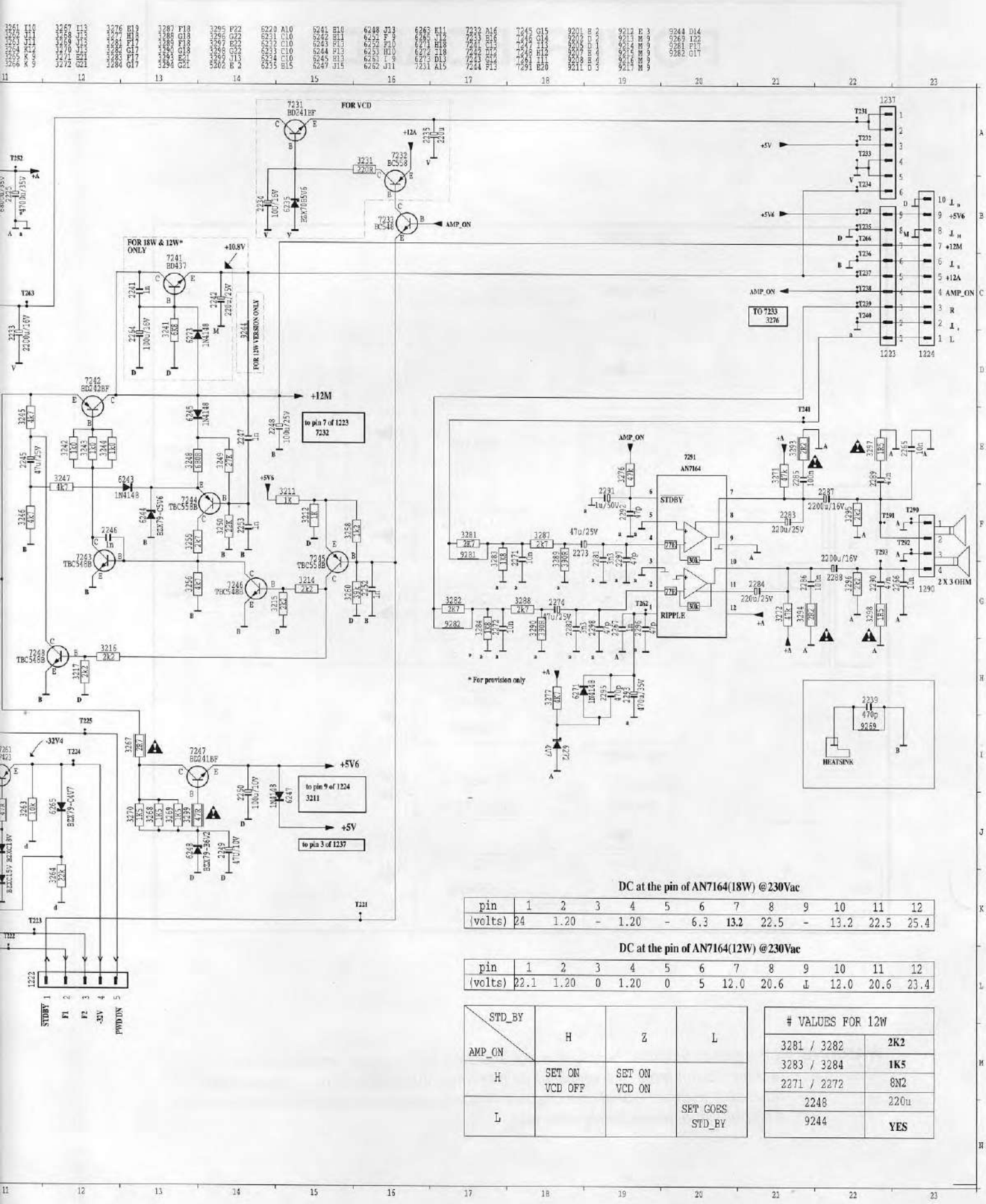

DC at the pin of AN7164(18W) @230Vac

pin	1	2	3	4	5	6	7	8	9	10	11	12
(volts)	24	1.20	-	1.20	-	6.3	13.2	22.5	-	13.2	22.5	25.4

DC at the pin of AN7164(12W) @230Vac

pin	1	2	3	4	5	6	7	8	9	10	11	12
(volts)	22.1	1.20	0	1.20	0	5	12.0	20.6	⊥	12.0	20.6	23.4

STD_BY / AMP_ON	H	Z	L
H	SET ON VCD OFF	SET ON VCD ON	
L			SET GOES STD_BY

# VALUES FOR 12W	
3281 / 3282	2K2
3283 / 3284	1K5
2271 / 2272	8N2
2248	220u
9244	YES

12 B 5	1223 D 7	2232 A 5	2248 C 7	2266 B 4	2287 B 4	3204 C 1	3245 B 6	3261 B 7	3276 C 5	3295 B 4
13 B 5	1224 D 7	2233 A 5	2249 C 6	2267 C 4	2288 A 4	3211 C 7	3246 B 7	3262 B 7	3277 D 5	3296 B 4
14 C 1	1231 D 1	2234 A 5	2250 C 6	2271 D 4	2289 B 4	3212 B 7	3247 B 7	3263 B 7	3281 D 4	3297 B 4
1201 D 3	1237 A 7	2235 A 6	2251 A 7	2272 C 5	2290 A 4	3214 B 7	3248 C 7	3264 B 7	3282 D 5	3298 A 4
1202 C 3	1290 B 3	2239 D 6	2252 B 7	2273 C 4	2291 C 5	3215 B 7	3249 C 7	3265 B 6	3283 D 4	3299 C 6
1205 D 3	2220 B 5	2240 B 5	2253 C 7	2274 D 5	2292 C 5	3216 B 7	3250 C 7	3266 B 6	3284 D 5	5202 D 2
1206 D 1	2221 B 5	2241 D 7	2254 A 7	2281 C 4	2293 D 5	3217 B 7	3251 B 6	3267 C 6	3287 D 4	5280 B 2
1208 C 2	2222 B 5	2242 C 7	2261 B 6	2282 C 5	2295 D 5	3231 A 6	3252 B 6	3268 C 6	3288 D 5	6220 B 4
1210 C 1	2224 C 5	2243 B 6	2262 A 7	2283 C 4	2296 D 4	3241 C 6	3255 C 7	3269 C 6	3289 D 4	6231 A 5
1211 C 1	2225 C 5	2245 B 6	2263 B 7	2284 C 4	2297 C 4	3242 B 6	3256 C 6	3270 C 6	3290 D 5	6232 A 5
1212 C 1	2230 B 5	2246 C 6	2264 C 6	2285 C 5	2298 C 5	3243 B 6	3258 B 7	3271 C 4	3293 C 5	6233 A 5
1222 A 7	2231 A 5	2247 C 7	2265 B 4	2286 C 5	3201 D 2	3244 B 6	3260 B 7	3272 C 4	3294 C 5	6234 A 5

1 2 3 4

COMPONENT LAYOUT COMPONENTSIDE

mc150/pw2vapanel-p1
3139 113 33

A B C D

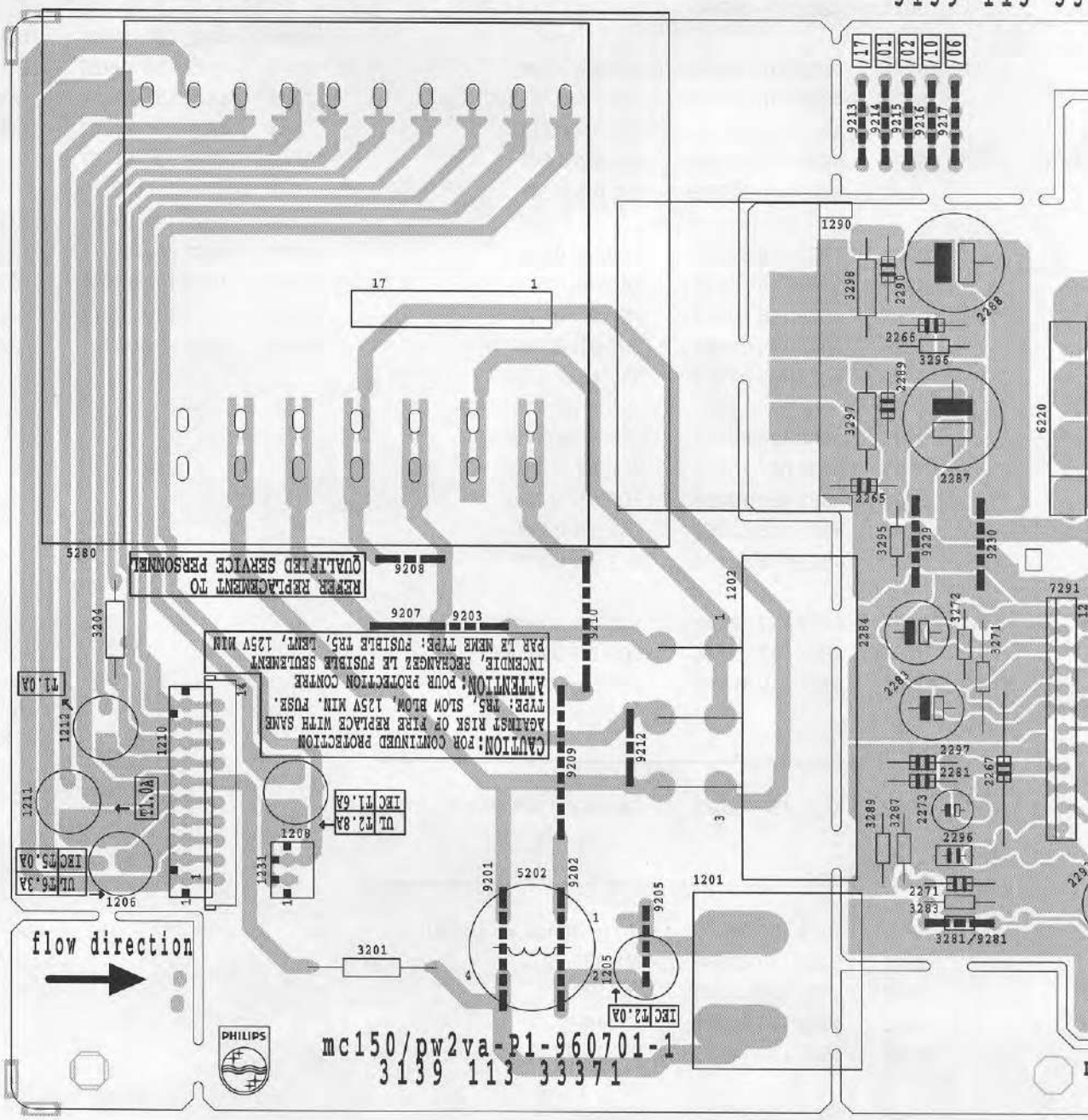

1 2 3 4

261 B 7	3276 C 5	3295 B 4	6235 A 6	6262 B 7	7244 C 7	9208 B 2	9221 B 7	9239 C 7	9270 D 6
262 B 7	3277 D 5	3296 B 4	6241 B 6	6263 B 7	7245 B 7	9209 C 2	9223 C 7	9240 C 7	9281 D 4
263 B 7	3281 D 4	3297 B 4	6242 B 6	6265 B 7	7246 B 7	9210 C 3	9224 B 6	9241 C 7	9282 D 5
264 B 7	3282 D 5	3298 A 4	6243 C 7	6271 D 5	7247 C 6	9212 C 3	9225 B 5	9244 C 7	9719 D 7
265 B 6	3283 D 4	3299 C 6	6244 C 7	6272 D 5	7248 B 7	9213 A 4	9226 C 7	9246 B 5	9720 D 7
266 B 6	3284 D 5	5202 D 2	6245 C 7	6273 D 7	7261 B 7	9214 A 4	9229 B 4	9247 B 5	----
267 C 6	3287 D 4	5280 B 2	6247 C 7	7231 A 6	7291 C 4	9215 A 4	9230 B 4	9248 B 5	
268 C 6	3288 D 5	6220 B 4	6248 C 6	7232 A 6	9201 D 2	9216 A 4	9231 A 6	9249 D 7	
269 C 6	3289 D 4	6231 A 5	6251 B 6	7233 A 7	9202 D 2	9217 A 4	9233 B 7	9250 C 5	
270 C 6	3290 D 5	6232 A 5	6252 A 6	7241 C 7	9203 C 2	9218 B 6	9234 C 7	9251 C 5	
271 C 4	3293 C 5	6233 A 5	6253 A 7	7242 B 6	9205 D 3	9219 D 6	9235 A 7	9252 C 5	
272 C 4	3294 C 5	6234 A 5	6261 B 6	7243 C 7	9207 C 2	9220 D 7	9238 A 6	9269 D 6	

4 5 6 7

50/pw2vapanel-p1-960701-1 mpch
3139 113 33371

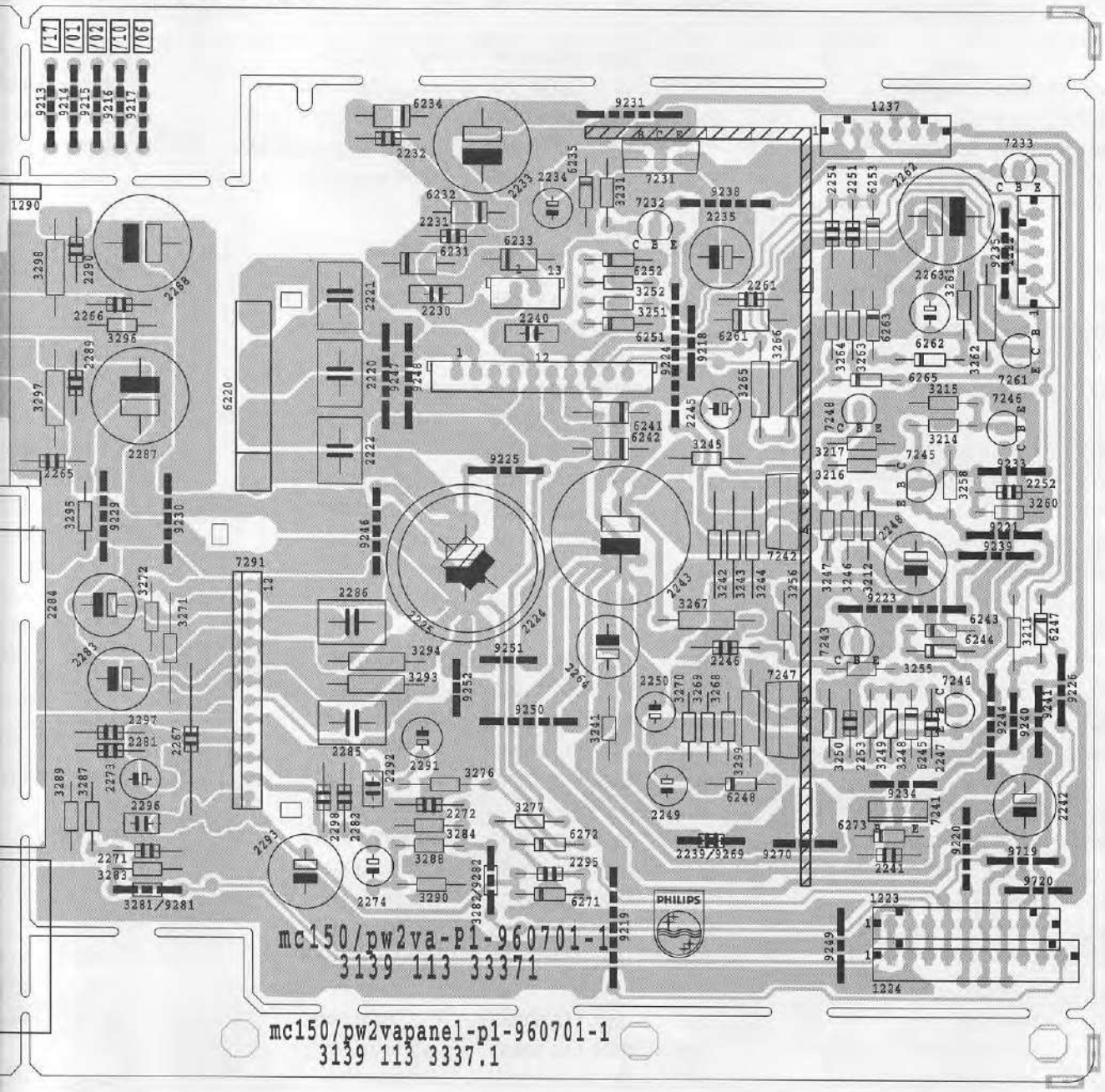

4 5 6 7

POWER BOARD PARTLIST

MISCELLANEOUS

21	4822 492 63051	Spring
22	4822 492 71734	Spring
24	4822 492 11084	Spring
1201	4822 265 31015	AC Socket
1202	4822 272 10269	Voltage Selector -/21/21M
1205	4822 071 52002	Fuse 2A -/21/21M
1206	4822 071 55002	Fuse 5A
1211	4822 071 51002	Fuse 1A
1212	4822 071 51002	Fuse 1A

CAPACITORS

2220	5322 121 42386	100nF 5% 63V
2221	5322 121 42386	100nF 5% 63V
2222	5322 121 42386	100nF 5% 63V
2224	4822 124 11516	6800uF 20% 35V
2239	4822 122 33519	470pF 10% 50V
2240	5322 121 52386	100nF 5% 63V
2241	4822 122 33197	1nF 10% 50V
2242	4822 124 22263	220µF 20% 25V
2243	4822 124 42057	3300µF 20% 25V
2245	4822 124 40433	47µF 20% 25V
2246	4822 122 33197	1nF 10% 50V
2247	4822 122 33197	1nF 10% 50V
2248	4822 124 22263	220µF 20% 25V
2249	4822 124 40433	47µF 20% 25V
2250	4822 124 41584	100µF 20% 10V
2251	4822 126 12785	47nF TUB 50V
2252	4822 122 33197	1nF 10% 50V
2253	4822 122 33197	1nF 10% 50V
2254	4822 126 12882	100nF +80-20% 50V
2261	4822 126 12882	100nF +80-20% 50V
2262	4822 124 40255	100µF 20% 63V
2263	4822 124 41596	22µF 20% 50V
2264	4822 124 81136	100µF 10% 25V (FW373C)
2265	4822 121 51387	10nF 20% 16V
2266	4822 121 51387	10nF 20% 16V
2267	4822 122 33197	1nF 10% 50V
2271	4822 121 51387	10nF 20% 16V
2272	4822 121 51387	10nF 20% 16V
2273	4822 124 40433	47µF 20% 25V
2274	4822 124 40433	47µF 20% 25V

CAPACITORS

2281	4822 122 10577	3.3nF 10% 16V
2282	4822 122 10577	3.3nF 10% 16V
2283	4822 124 22263	220µF 20% 25V
2284	4822 124 22263	220µF 20% 25V
2285	5322 121 52386	100nF 5% 63V
2285	5322 121 52386	100nF 5% 63V
2287	4822 124 80148	2200µF 20% 16V
2288	4822 124 80148	2200µF 20% 16V
2289	4822 126 12785	47nF +80-20% 50V
2290	4822 126 12785	47nF +80-20% 50V
2291	4822 124 40242	1µF 20% 63V
2293	4822 124 41334	470µF 20% 63V
2295	4822 122 33519	470pF 10% 50V
2297	4822 122 33848	47pF 5% 50V (FW373C)
2298	4822 122 33848	47pF 5% 50V (FW373C)

RESISTORS

3201	4822 053 21106	10M 5% 0.5W
3204	4822 052 10108	1Ω 5% 0.33W
3211	4822 050 11002	1k 1% 0.5W
3212	4822 050 11002	1k 1% 0.5W
3214	4822 116 52256	2k2 5% 0.5W
3215	4822 116 52256	2k2 5% 0.5W
3216	4822 116 52256	2k2 5% 0.5W
3217	4822 116 52256	2k2 5% 0.5W
3241	4822 116 83961	6k8 5% 0.5W
3242	4822 050 11002	1k 1% 0.4W
3243	4822 050 11002	1k 1% 0.4W
3244	4822 050 11002	1k 1% 0.4W
3245	4822 116 52283	4k7 5% 0.5W
3246	4822 116 52283	4k7 5% 0.5W
3247	4822 116 52283	4k7 5% 0.5W
3248	4822 116 52228	680R 5% 0.5W
3249	4822 116 52264	27k 5% 0.5W
3250	4822 116 52257	22k 5% 0.5W
3251	4822 116 52283	4k7 5% 0.5W
3252	4822 116 52283	4k7 5% 0.5W
3255	4822 116 52263	2k7 5% 0.5W
3256	4822 116 52283	4k7 5% 0.5W
3258	4822 116 52207	1k2 5% 0.5W
3260	4822 116 83882	39k 5% 0.5W
3261	4822 116 52276	3k9 5% 0.5W

POWER BOAR

RESISTORS

3262	4822
3263	4822
3264	4822
3265	4822
3266	4822
3267	4822
3268	4822
3269	4822
3270	4822
3271	4822
3272	4822
3276	4822
3277	4822
3281	4822
3282	4822
3283	4822
3284	4822
3287	4822
3288	4822
3289	4822
3290	4822
3293	4822
3294	4822
3295	4822
3296	4822
3297	4822
3298	4822
3299	4822

COILS

5202	4822

DIODES

6220	4822
6241	5322
6242	5322
6243	4822
6244	4822
6245	4822
6247	4822
6248	5322
6251	4822
6252	4822

POWER BOARD PARTLIST

RESISTORS

3262	4822 052 10479	47Ω 5% 0.33W
3263	4822 116 83864	10k 5% 0.5W
3264	4822 116 52257	22k 5% 0.5W
3265	4822 052 10479	47Ω 5% 0.33W
3266	4822 052 10479	47Ω 5% 0.33W
3267	4822 052 10278	2R7 5% 0.33W
3268	4822 116 52243	1k5 5% 0.5W
3269	4822 116 52243	1k5 5% 0.5W
3270	4822 116 52243	1k5 5% 0.5W
3271	4822 116 52284	47k 5% 0.5W
3272	4822 116 52284	47k 5% 0.5W
3276	4822 116 52284	47k 5% 0.5W
3277	4822 116 52283	4k7 5% 0.5W
3281	4822 116 52263	2k7 5% 0.5W
3282	4822 116 52263	2k7 5% 0.5W
3283	4822 116 52249	1K8 5% 0.5W
3284	4822 116 52249	1K8 5% 0.5W
3287	4822 116 52263	2K7 5% 0.5W
3288	4822 116 52263	2K7 5% 0.5W
3289	4822 116 52222	390Ω 5% 0.5W
3290	4822 116 52222	390Ω 5% 0.5W
3293	4822 052 10228	2Ω2 5% 0.33W
3294	4822 052 10228	2Ω2 5% 0.33W
3295	4822 116 52256	2K2 5% 0.5W
3296	4822 116 52256	2K2 5% 0.5W
3297	4822 117 12148	1Ω5 5% 330mW
3298	4822 117 12148	1Ω5 5% 330mW
3299	4822 052 10479	47R 5% 0.33W

COILS

5202	4822 157 71285	Coil 400μH 30% (Not for -/37)

DIODES

6220	4822 130 82078	Diode Bridge D5SBA20
6241	5322 130 80686	1N5392
6242	5322 130 80686	1N5392
6243	4822 130 30621	1N4148
6244	4822 130 34173	BZX79-C5V6
6245	4822 130 34173	BZX79-C5V6
6247	4822 130 30621	1N4148
6248	5322 130 30684	1N4002
6251	4822 130 30621	1N4148
6252	4822 130 30621	1N4148

DIODES

6253	4822 130 34382	BZX79-C8V2
6261	5322 130 30684	1N4002
6262	4822 130 31024	BZX79-C18
6263	4822 130 34281	BZX79-C15
6265	4822 130 34174	BZX79-C4V7
6271	4822 130 30621	1N4148
6272	4822 130 34174	BZX79-C4V7

TRANSISTORS

9241	4822 130 40982	BD437
7242	4822 130 40995	BD438
7243	4822 130 40937	BC548B
7244	4822 130 44197	BC558B
8245	4822 130 44197	BC558B
7246	4822 130 40937	BC548B
8247	4822 209 80817	L7805CV
7248	4822 130 40937	BC548B
7261	4822 130 40917	BD238
7291	4822 209 90411	AN7164

AF3 BOARD

TABLE OF CONTENTS

BRIEF IN

The AF3

a. SOF
rear
micr
The

b. Kara
NK:
SK:
FK:

c. Dolb
It ca

d. Line

e. Sub-

f. Incre

g. Hea

h. CD S
only.

i. Hea

j. Atte

BRIEF INTRODUCTION OF AF3 BOARD

The AF3 Board consists of the following:

a. SOFAC IC which includes functions such as source selection, loudness control, dynamic bass control, treble control, front/rear volume control and muting function. Sound features such as DBB, DSC, and IS are controllable via I^2C data from the microprocessor.
The SOFAC IC caters for 4 input sources namely Tuner, Tape, CD and AUX.

b. Karaoke Mic Mixing
NK: Non-Karaoke
SK: Simple Karaoke which caters for mic. mixing with additional mic. amplifier board.
FK: Full Karaoke with vocal fader and echo effect with additional Karaoke Board.

c. Dolby Pro-Logic interface
It caters for DPL and also DPL with one of the Karaoke functions.

d. Line out provision

e. Sub-woofer output with cinch socket for connection to active sub-woofer speaker.

f. Incredible Surround effect using transistor circuit to create phase shifting and spatial effect.

g. Headphone amplifier using Op-Amp. NJM4456M

h. CD Standby control circuit which switches on the supply to CD Servo control IC, HF circuit and the laser light pen in CD mode only.

i. Headphone Sensing circuit to mute centre and surround channels in DPL application.

j. Attenuation network is provided at the output of the AF3 Board for interfacing with power board of different output power.

AF3 CIRCUIT

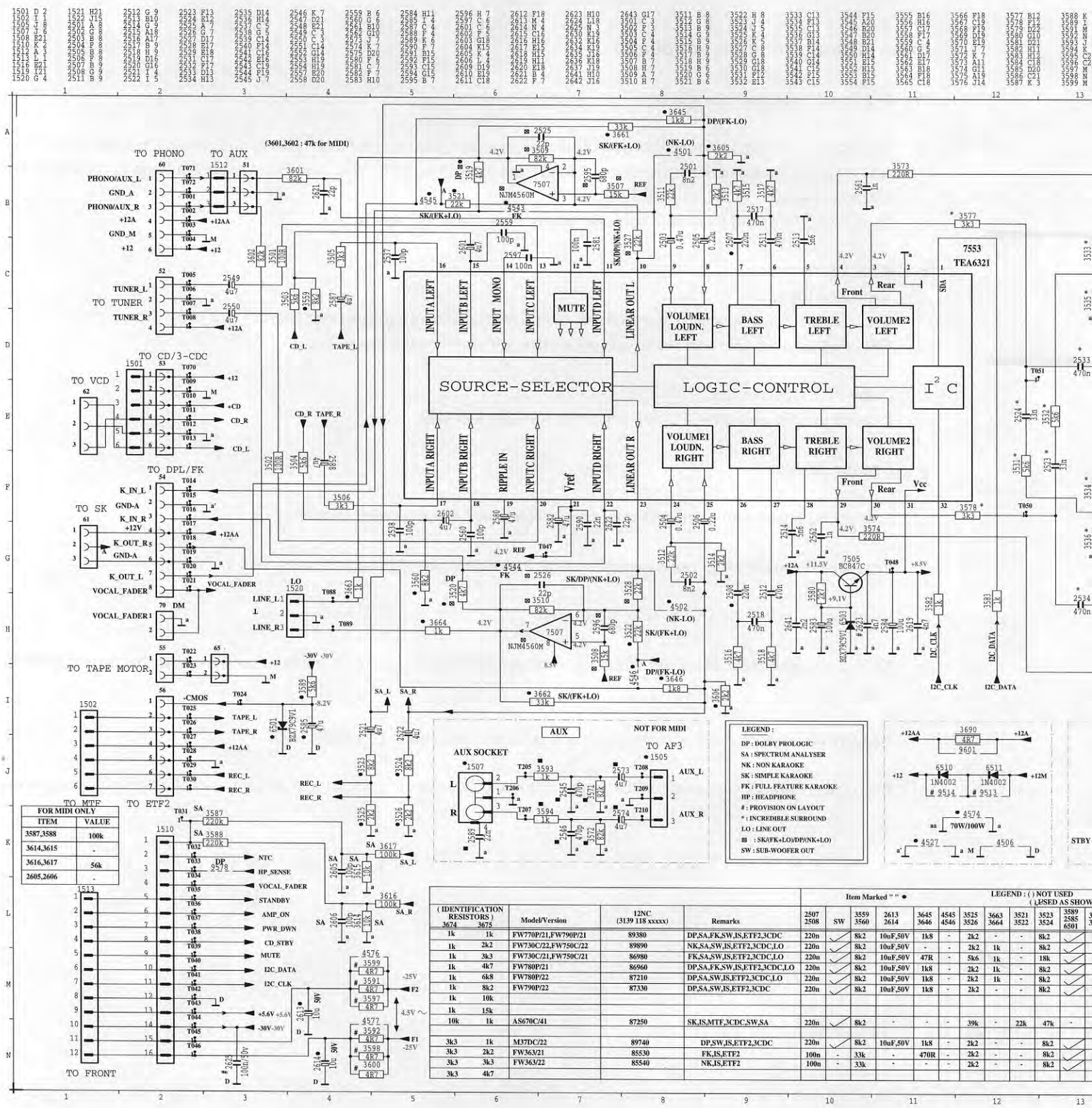

FOR MIDI ONLY	
ITEM	VALUE
3587,3588	100k
3614,3615	-
3616,3617	56k
2605,2606	-

(IDENTIFICATION RESISTORS) 3674	3675	Model/Version	12NC (3139 118 xxxxx)	Remarks	2507 2508	SW	3559 3560	2613 2614	3645 3646	4545 4546	3525 3526	3663 3664	3521 3522	3523 3524	3589 2585 6501
					Item Marked " " ●										LEGEND : ( ) NOT USED ( ) USED AS SHOW
1k	1k	FW770P/21,FW790P/21	89380	DP,SA,FK,SW,IS,ETF2,3CDC	220n	✓	8k2	10uF,50V	1k8	-	2k2	-	-	8k2	✓
1k	2k2	FW730C/22,FW750C/22	89890	NK,SA,SW,IS,ETF2,3CDC,LO	220n	✓	8k2	10uF,50V	-	-	2k2	1k	-	8k2	✓
1k	3k3	FW730C/21,FW750C/21	86980	FK,SA,SW,IS,ETF2,3CDC,LO	220n	✓	8k2	10uF,50V	47R	-	5k6	1k	-	18k	✓
1k	4k7	FW780P/21	86960	DP,SA,FK,SW,IS,ETF2,3CDC,LO	220n	✓	8k2	10uF,50V	1k8	-	2k2	1k	-	8k2	✓
1k	6k8	FW780P/22	87210	DP,SA,SW,IS,ETF2,3CDC,LO	220n	✓	8k2	10uF,50V	1k8	-	2k2	1k	-	8k2	✓
1k	8k2	FW790P/22	87330	DP,SA,SW,IS,ETF2,3CDC	220n	✓	8k2	10uF,50V	1k8	-	2k2	-	-	8k2	✓
1k	10k														
1k	15k														
10k	1k	AS670C/41	87250	SK,IS,MTF,3CDC,SW,SA	220n	✓	8k2	-	-	-	39k	-	22k	47k	-
3k3	1k	M37DC/22	89740	DP,SW,IS,ETF2,3CDC	220n	✓	8k2	10uF,50V	1k8	-	2k2	-	-	8k2	✓
3k3	2k2	FW363/21	85530	FK,IS,ETF2	100n	-	33k	-	470R	-	2k2	-	-	8k2	✓
3k3	3k3	FW363/22	85540	NK,IS,ETF2	100n	-	33k	-	-	-	2k2	-	-	8k2	✓
3k3	4k7														

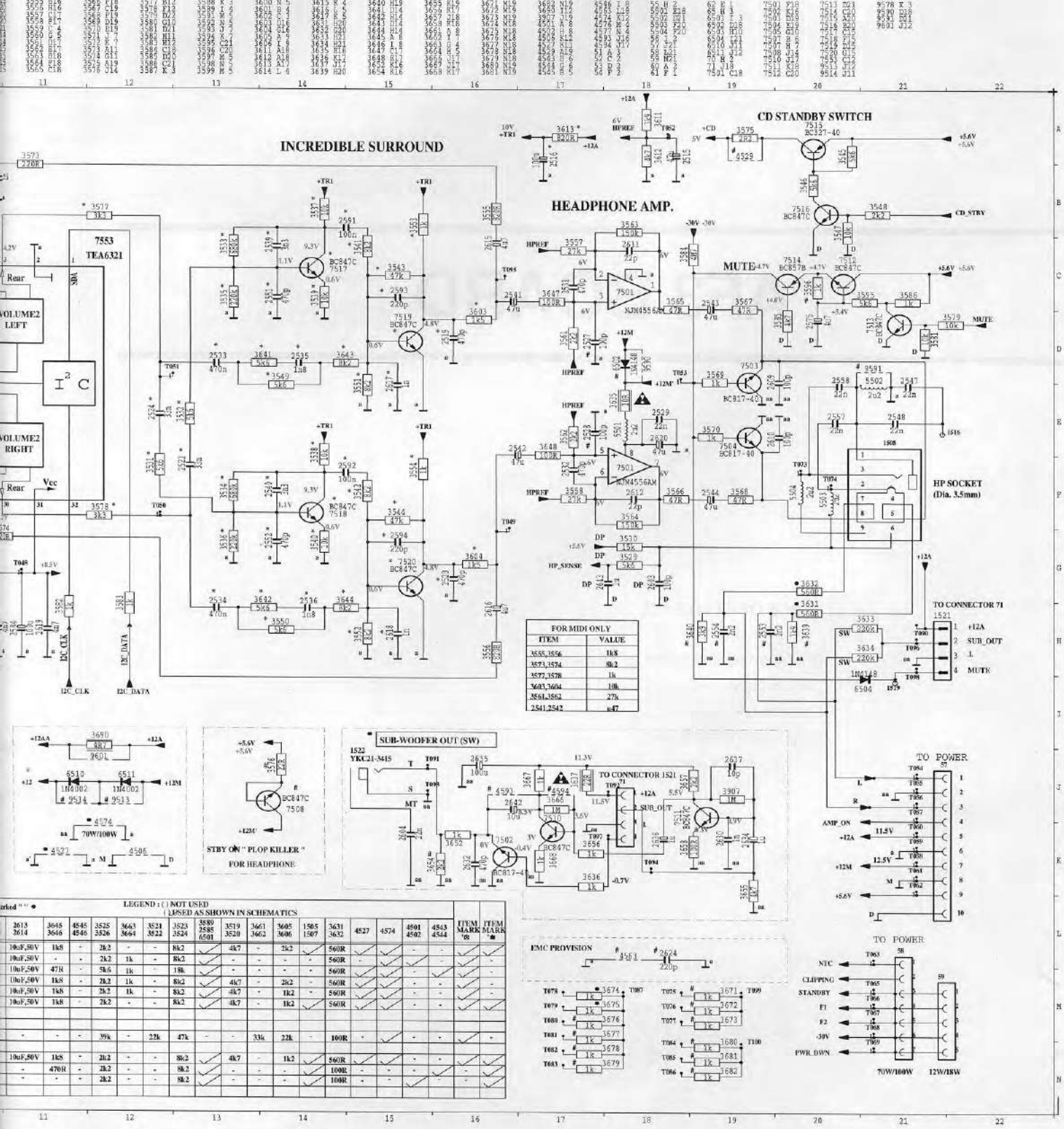
INCREDIBLE SURROUND
HEADPHONE AMP.
CD STANDBY SWITCH
7553
TEA6321
VOLUME2 LEFT
VOLUME2 RIGHT
MUTE
HP SOCKET (Dia. 3.5mm)
TO CONNECTOR 71
TO POWER
SUB-WOOFER OUT (SW)
TO CONNECTOR 1521
STBY ON " PLOP KILLER " FOR HEADPHONE
EMC PROVISION
FOR MIDI ONLY
ITEM VALUE
3555,3556 1k8
3573,3574 8k2
3577,3578 1k
3603,3604 10k
3561,3562 27k
2541,2542 u47
LEGEND : ( ) NOT USED
( ) USED AS SHOWN IN SCHEMATICS

COMPONENT LAYOUT

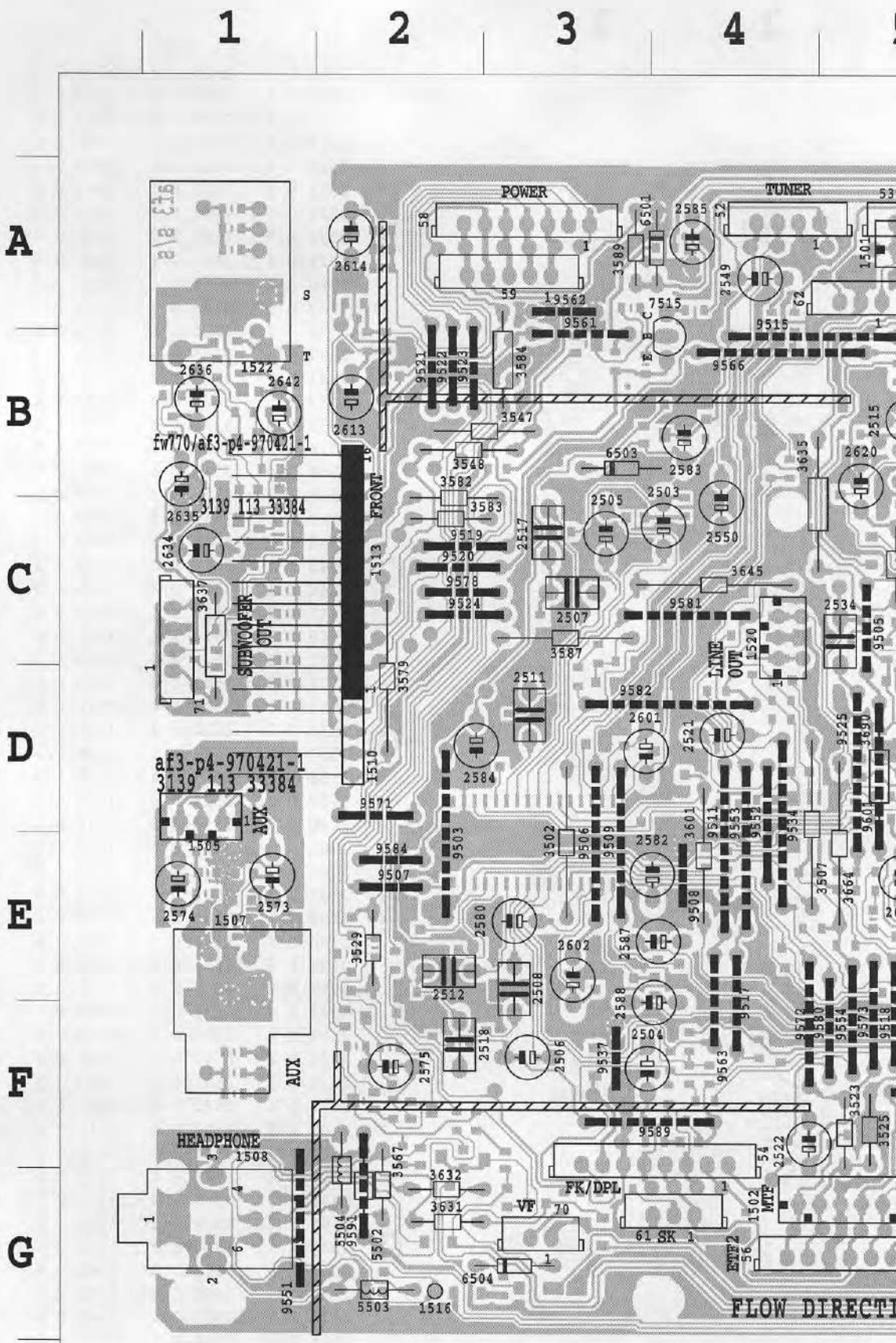

This assembly drawing shows a summary of all possible versions. For
used in a specific version see schematic diagram and respective parts l

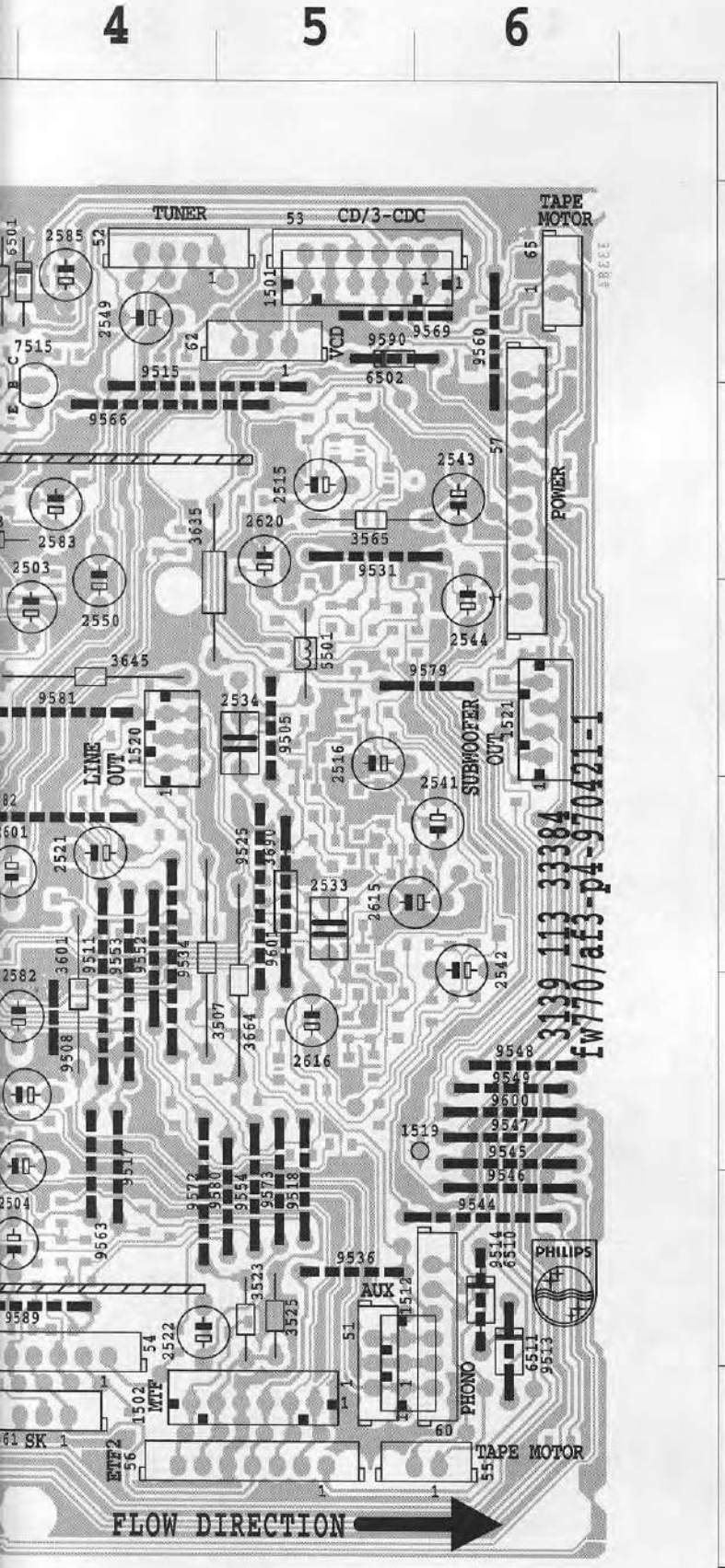

ll possible versions. For components
am and respective parts list.

	51	F 5	2587	E 4	9519	C 2
	52	A 4	2588	F 4	9520	C 2
	53	A 5	2601	D 3	9521	B 2
	54	F 4	2602	E 3	9522	B 2
	55	G 6	2613	B 2	9523	B 2
	56	G 5	2614	A 2	9524	C 2
	57	B 6	2615	D 6	9525	D 5
A	58	A 3	2616	E 5	9531	B 5
	59	A 3	2620	B 5	9534	D 4
	60	F 6	2634	C 1	9536	F 5
	61	G 4	2635	B 1	9537	F 3
	62	A 5	2636	B 1	9544	F 6
	65	A 6	2642	B 1	9545	E 6
	70	G 3	3502	E 3	9546	F 6
B	71	C 1	3507	D 4	9547	E 6
	1501	A 5	3523	F 5	9548	E 6
	1502	G 5	3525	F 5	9549	E 6
	1505	D 1	3529	E 2	9551	G 1
	1507	E 1	3547	B 2	9552	D 4
	1508	G 1	3548	B 2	9553	E 4
	1510	C 2	3565	B 5	9554	F 5
C	1512	F 5	3567	G 2	9560	A 6
	1513	C 2	3579	D 2	9561	B 3
	1516	G 2	3582	C 2	9562	A 3
	1518	E 6	3583	C 2	9563	E 4
	1520	C 4	3584	B 3	9566	B 4
	1521	C 6	3587	C 3	9569	A 5
	1522	A 1	3589	A 3	9571	D 2
D	2503	C 4	3601	E 4	9572	F 4
	2504	F 3	3631	G 2	9573	F 5
	2505	C 3	3632	G 2	9578	C 2
	2506	F 3	3635	C 4	9579	C 6
	2507	C 3	3637	C 1	9580	F 5
	2508	E 3	3645	C 4	9581	C 4
	2511	D 3	3664	E 5	9582	D 4
	2512	E 2	5501	C 5	9584	E 2
E	2515	B 5	5502	G 2	9589	F 3
	2516	C 5	5503	G 2	9590	A 5
	2517	C 3	5504	G 2	9591	G 2
	2518	F 2	6501	A 4	9600	E 6
	2521	D 4	6502	A 5	9601	D 5
	2522	F 4	6503	B 3		
	2533	D 5	6504	G 3		
F	2534	C 5	6510	F 6		
	2541	D 6	6511	F 6		
	2542	D 6	7515	B 4		
	2543	B 6	9503	E 2		
	2544	C 6	9505	C 5		
	2549	A 4	9506	E 3		
	2550	C 4	9507	E 2		
G	2573	E 1	9508	E 4		
	2574	E 1	9509	E 3		
	2575	F 2	9511	E 4		
	2580	E 3	9513	F 6		
	2582	E 3	9514	F 6		
	2583	B 4	9515	B 4		
	2584	D 2	9517	F 4		
	2585	A 4	9518	F 5		

CHIP LAYOUT

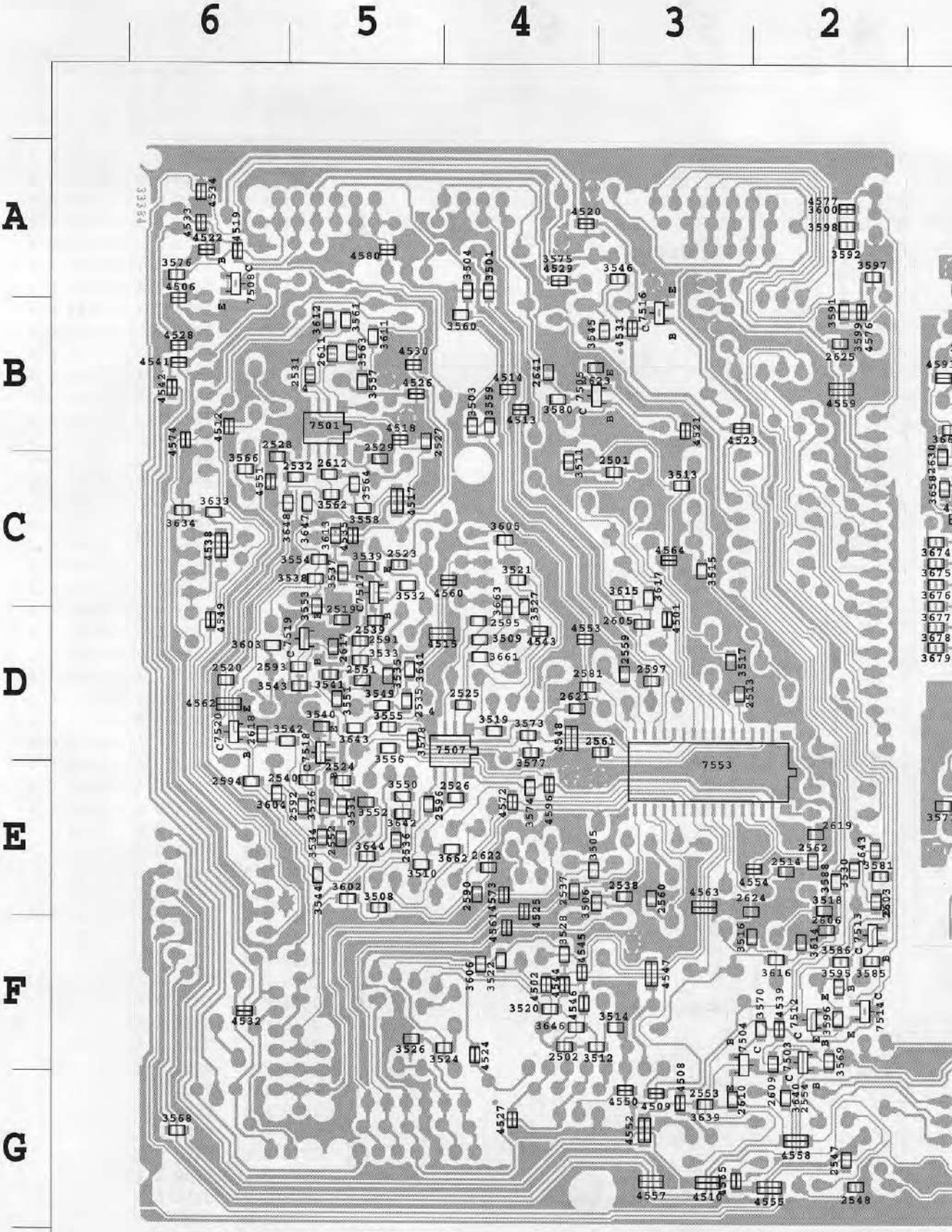

This assembly drawing shows a summary of all possible versions. For components used in a specific version see schematic diagram and respective parts list.

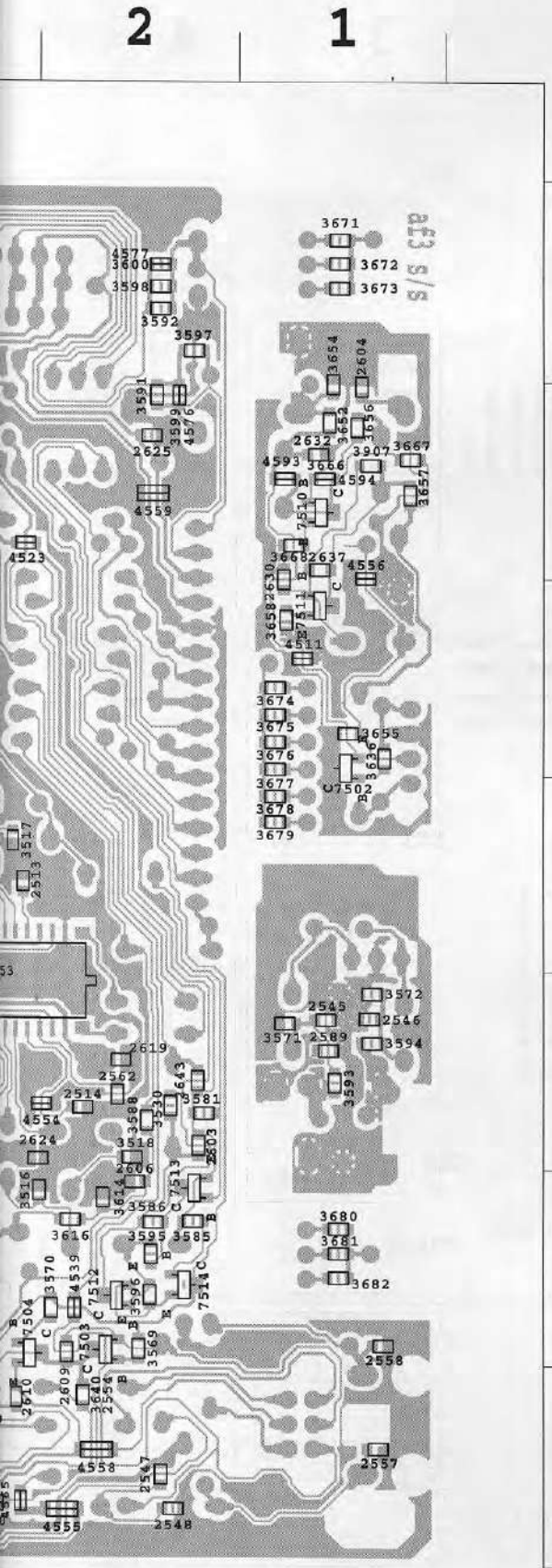

rsions. For components
ctive parts list.

	2501 C 3	2623 B 4	3558 C 5	3652 B 1
	2502 F 4	2624 E 3	3559 B 4	3654 B 1
	2513 D 3	2625 B 2	3560 B 4	3655 C 1
	2514 E 2	2630 C 1	3561 B 5	3656 B 1
	2519 D 5	2632 B 1	3562 C 5	3657 B 1
	2520 D 6	2637 B 1	3563 B 5	3658 C 1
	2523 C 5	2641 B 4	3564 C 5	3661 D 4
A	2524 E 5	2643 E 2	3566 C 6	3662 E 4
	2525 D 4	3501 A 4	3568 G 6	3663 C 4
	2526 E 4	3503 B 4	3569 F 2	3666 B 1
	2527 B 5	3504 A 4	3570 F 2	3667 B 1
	2528 C 6	3505 E 4	3571 E 1	3668 B 1
	2529 C 5	3506 E 4	3572 E 1	3671 A 1
	2531 B 5	3508 E 5	3573 D 4	3672 A 1
B	2532 C 5	3509 D 4	3574 E 4	3673 A 1
	2535 D 5	3510 E 5	3575 A 4	3674 C 1
	2536 E 5	3511 C 4	3576 A 6	3675 C 1
	2537 E 4	3512 F 4	3577 D 4	3676 C 1
	2538 E 3	3513 C 3	3578 D 5	3677 C 1
	2539 D 5	3514 F 3	3580 B 4	3678 D 1
	2540 E 5	3515 C 3	3581 E 2	3679 D 1
C	2545 E 1	3516 F 3	3585 F 2	3680 F 1
	2546 E 1	3517 D 3	3586 F 2	3681 F 1
	2547 G 2	3518 E 2	3588 E 2	3682 F 1
	2548 G 2	3519 D 4	3591 B 2	3907 B 1
	2551 D 5	3520 F 4	3592 A 2	4501 D 3
	2552 E 5	3521 C 4	3593 E 1	4502 F 4
	2553 G 3	3522 F 4	3594 E 1	4506 B 6
D	2554 G 2	3524 F 4	3595 F 2	4508 G 3
	2557 G 1	3526 F 5	3596 F 2	4509 G 3
	2558 F 1	3527 C 4	3597 A 2	4510 G 3
	2559 D 3	3528 F 4	3598 A 2	4511 C 1
	2560 E 3	3530 E 2	3599 B 2	4512 B 6
	2561 D 3	3531 E 5	3600 A 2	4513 B 4
	2562 E 2	3532 C 5	3602 E 5	4514 B 4
	2581 D 4	3533 D 5	3603 D 6	4515 D 5
E	2589 E 1	3534 E 5	3604 E 6	4517 C 5
	2590 E 4	3535 D 5	3605 C 4	4518 B 5
	2591 D 5	3536 E 5	3606 F 4	4519 A 6
	2592 E 5	3537 C 5	3611 B 5	4520 A 4
	2593 D 5	3538 C 5	3612 B 5	4521 B 3
	2594 E 6	3539 C 5	3613 C 5	4522 A 6
	2595 D 4	3540 D 5	3614 F 2	4523 B 3
F	2596 E 5	3541 D 5	3615 C 3	4524 F 4
	2597 D 3	3542 D 6	3616 F 2	4525 E 4
	2603 E 2	3543 D 5	3617 C 3	4526 B 5
	2604 B 1	3544 E 5	3633 C 6	4527 G 4
	2605 D 3	3545 B 3	3634 C 6	4528 B 6
	2606 F 2	3546 A 3	3636 C 1	4529 A 4
	2609 F 2	3549 D 5	3639 G 3	4530 B 5
G	2610 G 3	3550 E 5	3640 G 2	4531 B 3
	2611 B 5	3551 D 5	3641 D 5	4532 F 6
	2612 C 5	3552 E 5	3642 E 5	4533 A 6
	2617 D 5	3553 C 5	3643 D 5	4534 A 6
	2618 D 6	3554 C 5	3644 E 5	4535 C 5
	2619 E 2	3555 D 5	3646 F 4	4538 C 6
	2621 D 4	3556 D 5	3647 C 5	4539 F 2
	2622 E 4	3557 B 5	3648 C 6	4541 B 6

ELECTRICAL PARTSLIST AF3 BOARD

MISCELLANEOUS

1507	4822 265 20553	Aux Connector
1508	4822 267 40898	Headphone

CAPACITORS

2501	4822 122 33336	8.2nF 10% 50V
2502	4822 122 33336	8.2nF 10% 50V
2503	4822 124 41407	0.47µF 20% 63V
2504	4822 124 41407	0.47µF 20% 63V
2505	4822 124 40746	0.22µF 20% 63V
2506	4822 124 40746	0.22µF 20% 63V
2507	5322 121 42386	100nF 5% 63V
2508	5322 121 42386	100nF 5% 63V
2511	4822 121 51252	470nF 5% 63V
2512	4822 121 51252	470nF 5% 63V
2513	4822 122 32646	5.6nF 10% 50V
2514	4822 122 32646	5.6nF 10% 50V
2515	4822 124 41751	47µF 20% 50V
2516	4822 124 81029	100µF 20% 25V
2517	4822 121 51252	470nF 5% 63V
2518	4822 121 51252	470nF 5% 63V
2519	5322 122 32268	470pF 10% 50V
2520	5322 122 32268	470pF 10% 50V
2521	4822 124 41751	47µF 20% 50V
2522	4822 124 41751	47µF 20% 50V
2523	4822 122 33177	10nF 20% 50V
2524	4822 122 33177	10nF 20% 50V
2527	5322 122 32531	100pF 5% 50V
2528	5322 122 32531	100pF 5% 50V
2529	5322 122 32654	22nF 10% 63V
2531	5322 122 32268	470pF 10% 50V
2532	5322 122 32268	470pF 10% 50V
2533	4822 121 51252	470nF 5% 63V
2534	4822 121 51252	470nF 5% 63V
2535	4822 122 33219	1.8nF 10% 50V
2536	4822 122 33219	1.8nF 10% 50V
2537	5322 122 32531	100pF 5% 50V
2538	5322 122 32531	100pF 5% 50V
2539	4822 122 33891	3.3nF 10% 63V
2540	4822 122 33891	3.3nF 10% 63V
2541	4822 124 41751	47µF 20% 50V
2542	4822 124 41751	47µF 20% 50V
2543	4822 124 41751	47µF 20% 50V
2544	4822 124 41751	47µF 20% 50V
2545	5322 122 32268	470pF 10% 50V

CAPACITORS

2546	5322 122 32268	470pF 10% 50V
2547	5322 122 32654	22nF 10% 63V
2549	4822 124 40246	4.7µF 20% 50V
2550	4822 124 40246	4.7µF 20% 50V
2551	5322 122 32268	470pF 10% 50V
2552	5322 122 32268	470pF 10% 50V
2557	5322 122 32654	22nF 10% 63V
2558	5322 122 32654	22nF 10% 63V
2559	5322 122 32531	100pF 5% 50V
2560	5322 122 32531	100pF 5% 50V
2561	5322 122 34123	1nF 10% 50V
2562	5322 122 34123	1nF 10% 50V
2573	4822 124 40246	4.7µF 20% 50V
2574	4822 124 40246	4.7µF 20% 50V
2575	4822 124 40246	4.7µF 20% 50V
2580	4822 124 41751	47µF 20% 50V
2581	4822 122 33177	10nF 20% 50V
2582	4822 124 41751	47µF 20% 50V
2583	4822 124 81029	100µF 20% 25V
2584	4822 124 81029	100µF 20% 25V
2585	4822 124 41751	47µF 20% 50V
2587	4822 124 40246	4.7µF 20% 50V
2588	4822 124 40246	4.7µF 20% 50V
2589	4822 126 13838	100nF +80%/-20% 50V
2590	5322 122 32658	22pF 5% 50V
2591	4822 126 13838	100nF +80%/-20% 50V
2592	4822 126 13838	100nF +80%/-20% 50V
2593	4822 122 33575	220pF 5% 50V
2594	4822 122 33575	220pF 5% 50V
2597	4822 126 13838	100nF +80%/-20% 50V
2601	4822 124 40246	4.7µF 20% 50V
2602	4822 124 40246	4.7µF 20% 50V
2603	5322 122 32531	100pF 5% 50V
2609	5322 122 32531	100pF 5% 50V
2610	5322 122 32531	100pF 5% 50V
2611	5322 122 32658	22pF 5% 50V
2612	5322 122 32658	22pF 5% 50V
2615	4822 124 40246	4.7µF 20% 50V
2616	4822 124 40246	4.7µF 20% 50V
2617	5322 122 34123	1nF 10% 50V

CAPACI

2618
2620
2621
2622
2623
2624
2641

RESIST

3501
3502
3503
3504
3505
3506
3511
3512
3513
3514
3515
3516
3517
3518
3523
3524
3527
3528
3531
3532
3533
3534
3535
3536
3537
3538
3539
3540
3541
3542
3543
3544
3545
3546
3547

ELECTRICAL PARTSLIST AF3 BOARD

CAPACITORS

2618	5322 122 34123	1nF 10% 50V
2620	4822 124 40433	47µF 20% 25V
2621	5322 122 32658	22pF 5% 50V
2622	5322 122 32658	22pF 5% 50V
2623	5322 126 10223	4.7nF 10% 63V
2624	5322 126 10794	220pF 5% 63V
2641	4822 122 33175	22nF 20% 50V

RESISTORS

3501	4822 051 20101	100R 1% 0.1W
3502	4822 116 52175	100R 1% 0.5W
3503	4822 051 20562	5k6 5% 0.1W
3504	4822 051 20562	5k6 5% 0.1W
3505	4822 051 20332	3k3 5% 0.1W
3506	4822 051 20332	3k3 5% 0.1W
3511	4822 051 20223	22k 5% 0.1W
3512	4822 051 20223	22k 5% 0.1W
3513	4822 051 20222	2k2 5% 0.1W
3514	4822 051 20222	2k2 5% 0.1W
3515	4822 051 20472	4k7 5% 0.1W
3516	4822 051 20472	4k7 5% 0.1W
3517	4822 051 20472	4k7 5% 0.1W
3518	4822 051 20472	4k7 5% 0.1W
3523	4822 116 52303	8k2 5% 0.5W
3524	4822 116 52303	8k2 5% 0.1W
3527	4822 116 52256	2k2 5% 0.5W
3528	4822 117 11449	2k2 1% 0.5W
3531	4822 051 20562	5k6 5% 0.1W
3532	4822 051 20562	5k6 5% 0.1W
3533	4822 051 20684	680k 5% 0.1W
3534	4822 051 20684	680k 5% 0.1W
3535	4822 051 20224	220k 5% 0.5W
3536	4822 051 20224	220k 5% 0.5W
3537	4822 117 10833	10k 5% 0.1W
3538	4822 117 10833	10k 5% 0.1W
3539	4822 117 10833	10k 5% 0.1W
3540	4822 117 10833	10k 5% 0.1W
3541	4822 051 20822	8k2 5% 0.1W
3542	4822 051 20822	8k2 5% 0.1W
3543	4822 051 20473	47k 5% 0.1W
3544	4822 051 20473	47k 5% 0.1W
3545	4822 051 20562	5k6 5% 0.1W
3546	4822 051 20562	5k6 5% 0.1W
3547	4822 116 83864	10k 5% 0.5W

RESISTORS

3548	4822 116 52256	2k2 5% 0.5W
3549	4822 051 20562	5k6 5% 0.1W
3550	4822 051 20562	5k6 5% 0.1W
3551	4822 051 20822	8k2 5% 0.1W
3552	4822 051 20822	8k2 5% 0.1W
3553	4822 051 10102	1k 2% 0.25W
3554	4822 051 10102	1k 2% 0.25W
3555	4822 051 20821	820R 5% 0.1W
3556	4822 051 20821	820R 5% 0.1W
3557	4822 051 20273	27k 5% 0.1W
3558	4822 051 20273	27k 5% 0.1W
3559	4822 051 20822	8k2 5% 0.1W
3559	4822 051 20333	33k 5% 0.1W (FW373C)
3560	4822 051 20822	8k2 5% 0.1W
3560	4822 051 20333	33k 5% 0.1W (FW373C)
3561	4822 051 20273	27k 5% 0.1W
3562	4822 117 11449	2k2 5% 0.1W
3563	4822 051 20154	150k 5% 0.1W
3564	4822 051 20154	150k 5% 0.1W
3565	4822 116 52195	47Ω 5% 0.5W
3566	4822 051 20479	47Ω 5% 0.1W
3567	4822 051 20479	47Ω 5% 0.1W
3568	4822 051 20479	47Ω 5% 0.1W
3569	4822 051 10102	1k 2% 0.25W
3570	4822 051 10102	1k 2% 0.25W
3571	4822 117 11149	82k 5% 0.1W
3572	4822 117 11149	82k 5% 0.1W
3573	4822 051 20221	220R 5% 0.1W
3574	4822 051 20221	220R 5% 0.1W
3575	4822 051 20228	2Ω2 5% 0.1W
3577	4822 051 10332	3k3 2% 0.25W
3578	4822 051 10332	3k3 2% 0.25W
3579	4822 116 83864	10k 5% 0.1W
3580	4822 117 11139	1k5 5% 0.1W
3581	4822 116 83864	10k 5% 0.5W
3582	4822 050 11002	1k 1% 0.4W
3583	4822 050 11002	1k 1% 0.4W
3584	4822 050 24705	4M7 1% 0.6W
3585	4822 051 20472	4k7 5% 0.1W
3586	4822 051 10102	1k 2% 0.25W

ELECTRICAL PARTSLIST AF2 BOARD

RESISTORS

3589	4822 116 52244	15k 5% 0.5W
3593	4822 051 10102	1k 2% 0.25W
3594	4822 051 10102	1k 2% 0.25W
3595	4822 051 20562	5k6 5% 0.1W
3601	4822 116 52297	68k 5% 0.1W
3602	4822 226 52297	68k 5% 0.1W
3603	4822 117 11139	1k5 5% 0.1W
3604	4822 117 11139	1k5 5% 0.1W
3611	4822 051 20392	3k9 5% 0.1W
3612	4822 051 20472	4k7 5% 0.1W
3613	4822 051 20821	820R 5% 0.1W
3631	4822 051 20101	100Ω 5% 0.1W
3632	4822 051 20101	100Ω 5% 0.1W
3633	4822 051 20224	220k 5% 0.1W
3634	4822 051 20224	220k 5% 0.1W
3635	4822 052 10109	10Ω 5% 0.33W
3641	4822 051 20562	5k6 5% 0.1W
3643	4822 051 20822	8k2 5% 0.1W
3644	4822 051 20822	8k2 5% 0.1W
3645	4822 116 83883	470R 5% 0.5W (FW373C)
3646	4822 116 83883	470R 5% 0.5W (FW373C)

CHIP JUMPER

4501	4822 051 20008	0Ω Jumper (Not for -/21)
4503	4822 051 20008	0Ω Jumper
4504	4822 051 20008	0Ω Jumper
4505	4822 051 20008	0Ω Jumper
4506	4822 051 20008	0Ω Jumper
4507	4822 051 20008	0Ω Jumper
4508	4822 051 20008	0Ω Jumper
4509	4822 051 20008	0Ω Jumper
4510	4822 051 20008	0Ω Jumper
4512	4822 051 20008	0Ω Jumper
4513	4822 051 20008	0Ω Jumper
4514	4822 051 20008	0Ω Jumper
4515	4822 051 20008	0Ω Jumper
4518	4822 051 20008	0Ω Jumper
4517	4822 051 20008	0Ω Jumper
4519	4822 051 20008	0Ω Jumper
4520	4822 051 20008	0Ω Jumper
4522	4822 051 20008	0Ω Jumper
4523	4822 051 20008	0Ω Jumper
4524	4822 051 20008	0Ω Jumper
4525	4822 051 20008	0Ω Jumper
4526	4822 051 20008	0Ω Jumper
4528	4822 051 20008	0Ω Jumper
4529	4822 051 20008	0Ω Jumper
4531	4822 051 20008	0Ω Jumper
4532	4822 051 20008	0Ω Jumper
4533	4822 051 20008	0Ω Jumper
4534	4822 051 20008	0Ω Jumper
4535	4822 051 20008	0Ω Jumper
4545	4822 051 20008	0Ω Jumper
4546	4822 051 20008	0Ω Jumper
4551	4822 051 20008	0Ω Jumper
4572	4822 051 20008	0Ω Jumper
4573	4822 051 20008	0Ω Jumper
4574	4822 051 20008	0Ω Jumper
4575	4822 051 20008	0Ω Jumper
4576	4822 051 20008	0Ω Jumper
4577	4822 051 20008	0Ω Jumper
4580	4822 051 20008	0Ω Jumper

ELECTRICAL

DIODES

6501	4822

INTERGRATED

7501	4822
7506	4822
7507	4822
7553	4822

TRANSISTORS

7503	4822
7504	4822
7505	5322
7508	5322
7512	5322
7513	5322
7514	5322
7515	4822
7516	5322

COILS

5501	4822
5502	4822
5503	4822
5504	4822

ELECTRICAL PARTSLIST AF2 BOARD

DIODES

6501	4822 130 34382	BZX79-C8V2

INTERGRATED CIRCUITS

7501	4822 209 31378	NJM4556AM
7506	4822 209 63709	LM324D
7507	4822 209 83357	NJM4560M (-/21)
7553	4822 209 33652	TEA6321T/V1

TRANSISTORS

7503	4822 130 42615	BC817-40
7504	4822 130 42615	BC817-40
7505	5322 130 42136	BC848C
7508	5322 130 42136	BC848C
7512	5322 130 42136	BC848C
7513	5322 130 42136	BC848C
7514	5322 130 41983	BC858B
7515	4822 130 41327	BC327-40
7516	5322 130 42136	BC848C

COILS

5501	4822 156 21721	COIL 2.2µH
5502	4822 156 21721	COIL 2.2µH
5503	4822 156 21721	COIL 2.2µH
5504	4822 156 21721	COIL 2.2µH

EXPLODED VIEW OF SET

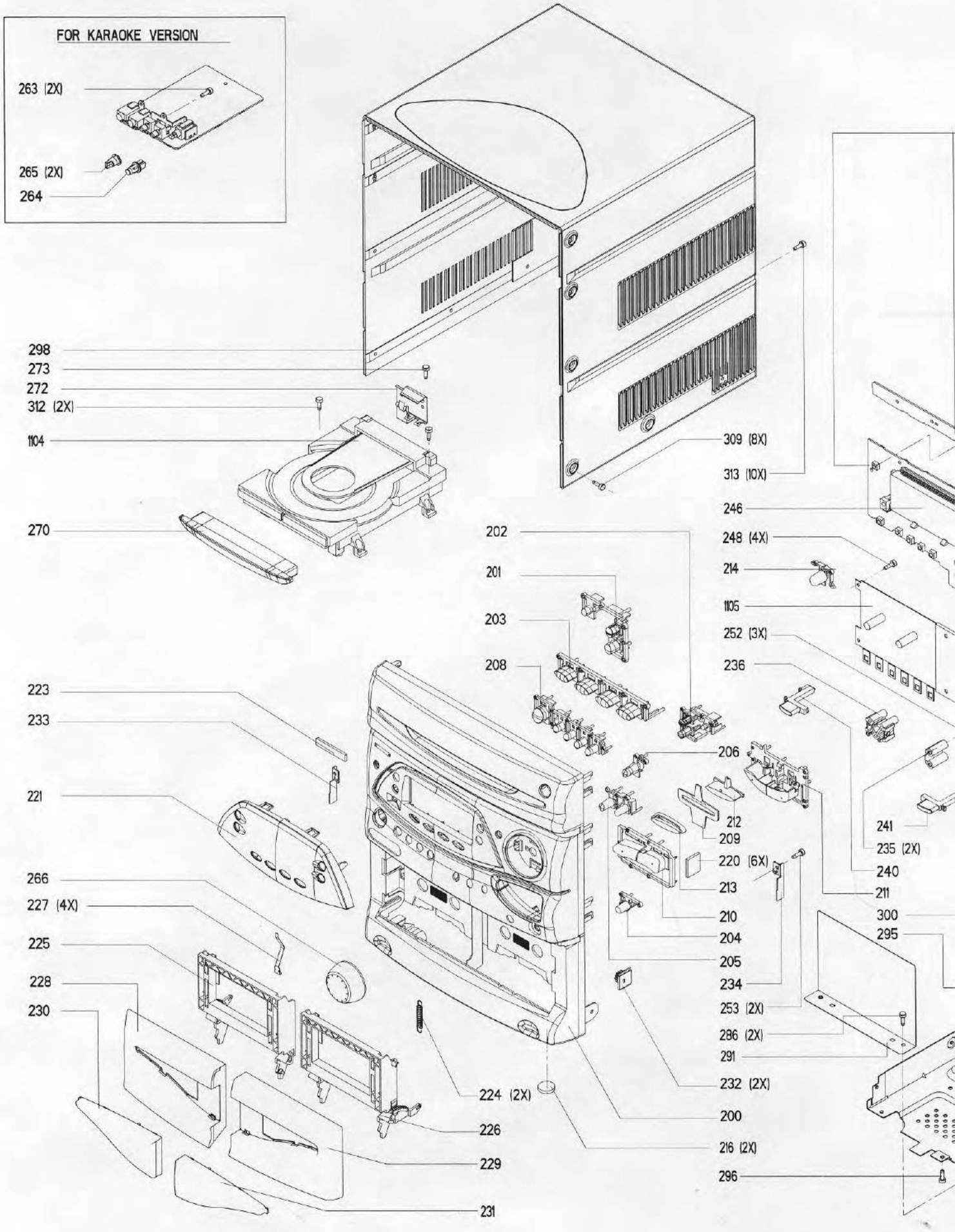

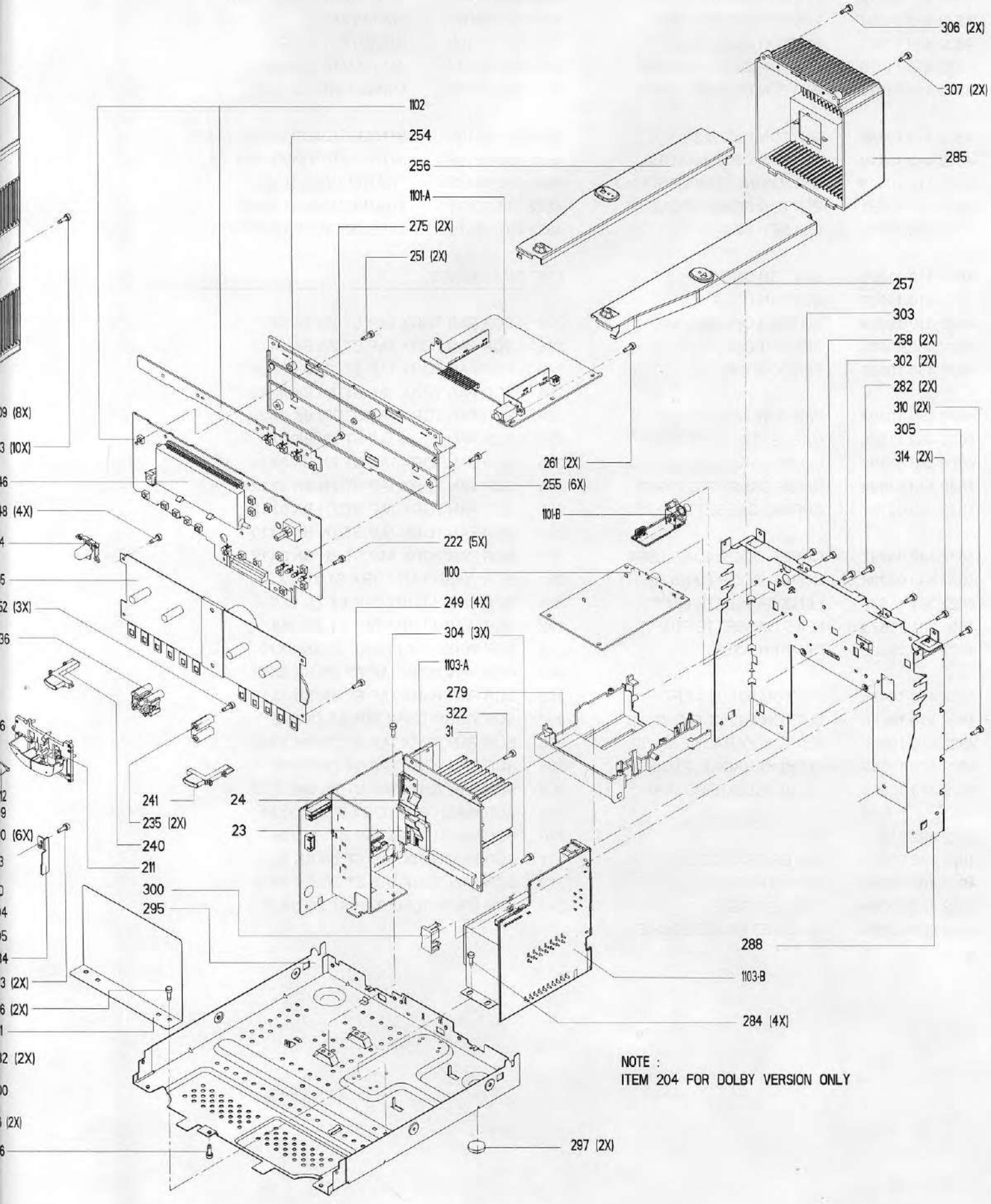

NOTE :
ITEM 204 FOR DOLBY VERSION ONLY

MECHANICAL PARTLIST

200	4822 459 04512	FRONT CABINET /21
200	4822 459 04504	FRONT CABINET /22/25
201	4822 410 11027	BUTTON DISPLAY LEFT
202	4822 410 11028	BUTTON DISPLAY RIGHT
203	4822 410 11029	BUTTON DISPLAY CENTRE
204	4822 410 10198	BUTTON HSD /22
205	4822 410 10199	BUTTON OPTIMUM/DBB
206	4822 410 10418	BUTTON INCREDIBLE SOUND
208	4822 410 11031	BUTTON POWER/SOURCE
209	4822 256 10206	HOLDER LED
210	4822 410 11006	BUTTON DSC1
211	4822 410 11007	BUTTON DSC2
214	4822 410 10204	BUTTON OPEN/CLOSE
216	4822 462 40683	PLATE (FOOT)
221	4822 450 10137	WINDOW DISPLAY
221	4822 450 10292	WINDOW DISPLAY /22
224	4822 492 11086	CASSETTE DOOR SPRING
225	4822 443 64597	DOOR CASSETTE LEFT
226	4822 443 64598	DOOR CASSETTE RIGHT
227	4822 492 42787	SPRING CASSETTE
228	4822 442 00797	COVER DOOR CASS LEFT
229	4822 442 00798	COVER DOOR CASS RIGHT
230	4822 381 11672	LENS CASSETTE LEFT
231	4822 381 11673	LENS CASSETTE RIGHT
232	4822 529 10322	DAMPER ASSY
240	4822 410 10425	BUTTON EJECT LEFT
241	4822 410 10426	BUTTON EJECT RIGHT
264	4822 410 10535	BUTTON KARAOKE /21/30
265	4822 410 10533	KNOB KARAOKE /21/30
266	4822 410 10966	KNOB VOLUME ROTARY
267	4822 492 51374	RING
270	4822 442 00799	COVER TRAY CDC
297	4822 462 40683	PLATE (FOOT)
298	4822 426 10069	CABINET REAR
300	4822 402 10288	BRACKET MAINS SOCKET

MISCELLANEOUS

4822 445 10623	1X LOUDSPEAKER BOX
4822 303 50063	FM AERIAL
4822 218 10195	REMOTE CONTROL
4822 303 50082	AM FRAME AERIAL
4822 321 10249	MAINS CORD /21/22
4822 736 15109	INTRUCTION FOR USE /21/30
4822 736 15108	INTRUCTION FOR USE /34
4822 146 10492	TRANSFORMER /21
4822 146 10491	TRANSFORMER /22/25
4822 691 10579	TAPE DECK CWB44FF06

LIST OF SCREWS

222	SCR PAN TORX TAP ST ZN BK 3X12
248	SCR PAN TORX TAP ST ZN BK 3X12
249	SCR PAN TORX TAP ST ZN BK 3X30
251	SCR PAN TORX TAP ST ZN BK 3X12
252	SCR PAN TORX TAP ST ZN BK 3X25
253	SCR PAN TORX TAP ST ZN BK 3X8
255	SCR PAN TORX TAP ST ZN BK 3X12
258	SCR PAN TORX TAP ST ZN BK 3X12
261	SCR PAN TORX TAP ST ZN BK 3X12
263	SCR PAN TORX TAP ST ZN BK 3X10
275	SCR PAN TORX TAP ST ZN BK 3X12
281	SCR WASH PAN TORX ST ZN 3X12
284	SCR WASH TORX TAP ST ZN 3X6
292	SCR WASH TORX TAP ST ZN 3X6
293	SCR WASH PAN TORX ST ZN 3X10
302	SCR PAN TORX TAP ST ZN BK 3X12
303	SCR PAN TORX TAP ST ZN BK 3X12
304	SCR WASH TORX TAP ST ZN 3X6
305	SCR PAN TORX TAP ST ZN BK 3X12
306	SCR PAN TORX TAP ST ZN M3X6
307	SCR PAN TORX TAP ST ZN BK 3X10
308	SCR WASH PAN TORX ST ZN 3X16
310	SCR WASH TORX TAP ST ZN 3X6
311	SCR PAN TORX TAP ST ZN BK 3X12
312	SCR PAN TORX TAP ST ZN BK 3X12
313	SCR WASH TORX TAP ST ZN 3X10

Service
Service
Service

Product Service Group CE Audio

Service Information

Already published Service Informations:

CORRECTIONS TO SERVICE MANUAL

ETF2 MODULE

* Due to errors, below are the updated parts list for the tape mechanism in the Service documentation.

1. Page 9-10 (Mechanism A & B)

Pos.	Service code	Description
1	4822 361 10841	Motor Assembly
4	-	Screw M2.6 x 4
5	-	Screw M2 x 3
-	4822 402 10627	Spring Eject Left (Play)
-	4822 402 10628	Spring Eject Right (Rec/Pb)

2. Page 10-11 (Playback Mechanism A)

Pos.	Service code	Description
1	4822 249 10397	Playback Head
12	4822 528 10974	Pinch Arm Assembly Right
23	4822 281 11069	Coil Assembly
34	4822 130 10205	Photo Sensor
35	4822 277 11749	Mode Switch
39	4822 278 90613	Leaf Switch
42	4822 358 10168	Belt AF

2. Page 10-12 (Record/Playback Mechanism B)

Pos.	Service code	Description
1	4822 249 10397	Playback Head
2	4822 249 40276	Erase Head
12	4822 528 10974	Pinch Arm Assembly Right
23	4822 281 11069	Coil Assembly
34	4822 130 10205	Photo Sensor
35	4822 277 11749	Mode Switch
39	4822 278 90613	Leaf Switch
42	4822 358 10235	Belt BR