HXR-NX5C/NX5E/NX5J/NX5M/NX5N/NX5P/NX5U

RMT-845

SERVICE MANUAL

US Model
Canadian Model
AEP Model
E Model
Chinese Model
Japanese Model

Ver. 1.2 2010.06

Revised-1

Replace the previously issued SERVICE MANUAL 9-852-737-12 with this Manual.

Photo: HXR-NX5U

SERVICE NOTE (Check the following note before the service.)

1-1. POWER SUPPLY DURING REPAIRS
1-2. PRECAUTION ON REPLACING THE VC-582 BOARD
1-3. SELF-DIAGNOSIS FUNCTION
1-4. GPS RECEIVING CHECK(NX5E/NX5J/NX5N/NX5P/NX5U)
1-5. PRECAUTION ON REPLACING THE GY-022 BOARD

- **Regarding the Adjustment, refer to SERVICE MANUAL 9-852-737-5□.**

Digital HD Video Camera Recorder

The components identified by mark ⚠ or dotted line with mark ⚠ are critical for safety. Replace only with part number specified.	Les composants identifiés par une marque ⚠ sont critiques pour la sécurité. Ne les remplacer que par une pièce portant le numéro spécifié.

SONY®

HXR-NX5C/NX5E/NX5J/NX5M/NX5N/NX5P/NX5U
9-852-737-13

Sony Corporation

2010F08-1
© 2010.06
Published by Sony Techno Create Corporation

985273713.pdf

Revision History

Ver.	Date	History	Contents	S.M. Rev. issued
1.0	2010.01	Official Release	—	—
1.1	2010.01	Revised-1 (A1 09-396)	• Correction of SERVICE NOTE Page 1-2, 1-4 • Correction of EXPLODED VIEWS Page 2-3, 2-4, 2-6, 2-7, 2-10, 2-12, 2-13, 2-14 • Correction of SUPPLIED ACCESSORIES Page 2-18 • Correction of ELECTRICAL PARTS LIST Page 2-19, 2-20, 2-30 • Correction of BLOCK DIAGRAMS Page 4-2,4-5, 4-7, 4-8, 4-11 • Correction of FRAME SCHEMATIC DIAGRAMS Page 5-1, 5-2 • Correction of SCHEMATIC DIAGRAMS Page 6-32, 6-40, 6-44, 6-49 • Correction of PRINTED WIRING BOARDS Page 6-68, 6-69	Yes
1.2	2010.06	Supplement-1 (S1 10-034)	• Change of EXPLODED VIEWS • Change of ELECTRICAL PARTS LIST • Change and Additoin of SCHEMATIC DIAGRAMS • Change of VF-179 Board Part Number Suffix 11 to 12 • Revision of Accessories S.M. Revised: Page 2-18	Yes

These specifications are extracted from instruction manual of HXR-NX5E/NX5M/NX5P.

– ENGLISH –

Self Diagnosis Supported model NXCAM AVCHD InfoLITHIUM MEMORY STICK HDMI PROGRESSIVE

SPECIFICATIONS

System
Video signal
PAL color, CCIR standards
HDTV 1080/50i, 720/50p
Video recording system
HD image quality: MPEG-4 AVC/H.264 AVCHD
SD image quality: MPEG-2 PS
Audio recording system
Linear PCM 2ch (48 kHz 16-bit)
Dolby Digital 2ch (48 kHz 16-bit)
Dolby Digital Stereo Creator employed
Still image recording system
DCF Ver. 2.0
Exif Ver. 2.21
MPF Baseline
Recording media (movies/still images)
"Memory Stick PRO Duo" media Flash memory units
SD memory cards, SDHC memory cards (Class 4, 6, 10)
Viewfinder
Electric viewfinder (color, black and white)
Picture: 1.1 cm (0.45 type, aspect ratio 16:9)
Total dot number:
1 226 880 (approx. 852 × 3 [RGB] × 480)
Image device
6.0 mm (1/3 type) 3CMOS sensor
Gross: Approx. 1 120 000 pixels
Effective (movie, 16:9):
Approx. 1 040 000 pixels*
Effective (movie, 4:3):
Approx. 780 000 pixels*
Lens
G Lens
20 × (Optical), Approx. 30 × (Digital, when [D.EXTENDER] is set to [ON])
Focal length
f=4.1 - 82.0 mm (3/16 - 3 1/4 in.)
When converted to a 35 mm still camera*
29.5 - 590 mm (1 3/16 - 23 1/4 in.) (16:9),
36.1 - 722 mm (1 7/16 - 28 1/2 in.) (4:3)
F1.6 - 3.4
Filter diameter: 72 mm (2 7/8 in.)
Color temperature
[AUTO]
(one push) A/B
[INDOOR] (3 200K)
[OUTDOOR] (5 800K±7 offset levels)
[MANU WB TEMP] (2 300K - 15 000K in 100K steps)
Minimum illumination
1.5 lx (lux) (Fixed Shutter Speed 1/25, auto gain, auto iris) (F 1.6)
* When [SET] of [STEADYSHOT] is set to [STEADYSHOT] or [OFF]

Output connectors
VIDEO OUT jack
Pin connector
1 Vp-p, 75 Ω (ohms) unbalanced, sync negative
AUDIO OUT jacks
Pin connectors
-10 dBu (at load impedance 47 kΩ (kilohms)), Output impedance with less than 2.2 kΩ (kilohms) (0 dBu = 0.775 Vrms)
COMPONENT OUT jack
Mini-D jack
Y: 1 Vp-p, 75 Ω (ohms)
PB/PR, CB/CR: 0.7 Vp-p, 75 Ω (ohms)
HDMI OUT jack
HDMI connector
SDI OUT jack
BNC
SMPTE292M/259M
(headphones) jack
Stereo-minijack (Ø 3.5 mm)

Input connectors
INPUT1/INPUT2 jacks
XLR 3-pin, female,
MIC: -48 dBu: 3 kΩ (kilohms)
(Variable in the range of between -60 dBu and -30 dBu in 6 dB step by the INPUT TRIM function)
LINE: +4 dBu: 10 kΩ (kilohms)
(0 dBu = 0.775 Vrms)

Input/Output connectors
USB jack
mini-B
Remote jack
Stereo mini-minijack (Ø 2.5 mm)
TC LINK IN/OUT jack
Pin connector
IN: 0.5 V to 18 Vp-p, 10 kΩ (kilohms)
OUT: 1.2 Vp-p, 75 Ω (ohms)
(IN/OUT switch-able)

LCD screen
Picture
8.0 cm (3.2 type, aspect ratio 16:9)
Total dot number
921 600 (1 920 × 480)

General
Power requirements
DC 7.2 V (battery pack)
DC 8.4 V (AC Adaptor/Charger)
Average power consumption*
HXR-NX5E/NX5P
During camera recording using the microphone ECM-XM1 and viewfinder with normal brightness: 7.7 W
During camera recording using the microphone ECM-XM1 and LCD with normal brightness: 7.7 W
HXR-NX5M
During camera recording using the microphone ECM-XM1 and viewfinder with normal brightness: 7.4 W
During camera recording using the microphone ECM-XM1 and LCD with normal brightness: 7.4 W
* When Flash Memory Unit HXR-FMU128 is used, the average power consumption increases about 1.1 W.
Operating temperature
0 °C to 40 °C (32 °F to 104 °F)
Storage temperature
-20 °C to +60 °C (-4 °F to +140 °F)
Dimensions (approx.)
173 × 193 × 449 mm
(6 7/8 × 7 5/8 × 17 3/4 in.) (w/h/d) including the projecting parts
173 × 193 × 449 mm
(6 7/8 × 7 5/8 × 17 3/4 in.) (w/h/d) including the projecting parts with the battery pack (NP-F570)
Mass (approx.)
2.2 kg (4 lb 15 oz) including the lens hood with lens cover 2.5 kg (5 lb 7 oz) including the battery pack (NP-F570), lens hood with lens cover and microphone (ECM-XM1)

AC Adaptor/Charger AC-VL1
Power requirements
AC 100 V - 240 V, 50 Hz/60 Hz
Power consumption
22 W
Output voltage
DC 8.4 V*
Operating temperature
0 °C to 40 °C (32 °F to 104 °F)
Storage temperature
-20 °C to +60 °C (-4 °F to +140 °F)
Dimensions (approx.)
136 × 51 × 90 mm
(5 3/8 × 2 1/8 × 3 5/8 in.) (w/h/d) excluding the projecting parts
Mass (approx.)
270 g (9.6 oz) excluding the power cord (mains lead)
* See the label on the AC Adaptor/Charger for other specifications.

Rechargeable battery pack NP-F570
Maximum output voltage
DC 8.4 V
Output voltage
DC 7.2 V
Maximum charge voltage
DC 8.4 V
Maximum charge current
3.0 A
Capacity
Typical: 15.8 Wh (2 200 mAh)
Minimum: 15.0 Wh (2 100 mAh)
Type
Li-ion

Design and specifications are subject to change without notice.
• Manufactured under license from Dolby Laboratories.

These specifications are extracted from instruction manual of HXR-NX5N/NX5U.

– ENGLISH –

Self Diagnosis Supported model NXCAM AVCHD InfoLITHIUM MEMORY STICK HDMI PROGRESSIVE

SPECIFICATIONS

System
Video signal
NTSC color, EIA standards
HDTV 1080/60i, 720/60p
Video recording system
HD image quality: MPEG-4 AVC/H.264 AVCHD
SD image quality: MPEG-2 PS
Audio recording system
Linear PCM 2ch (48 kHz 16-bit)
Dolby Digital 2ch (48 kHz 16-bit)
Dolby Digital Stereo Creator employed
Still image recording system
DCF Ver. 2.0
Exif Ver. 2.21
MPF Baseline
Recording media (movies/still images)
"Memory Stick PRO Duo" media Flash memory unit SD memory card, SDHC memory card (Class 4, 6, 10)
Viewfinder
Electric viewfinder (color, black and white)
Picture: 1.1 cm (0.45 type, aspect ratio 16:9)
Total dot number:
1 226 880 (approx. 852 × 3 [RGB] × 480)
Image device
6.0 mm (1/3 type) 3CMOS sensor
Gross: Approx. 1 120 000 pixels
Effective (movie, 16:9):
Approx. 1 040 000 pixels*
Effective (movie, 4:3):
Approx. 780 000 pixels*
Lens
G Lens
20 × (Optical), Approx. 30 × (Digital, when [D.EXTENDER] is set to [ON])
Focal length
f=4.1 - 82.0mm (3/16 - 3 1/4 in.)
When converted to a 35 mm still camera*
29.5 - 590 mm (1 3/16 - 23 1/4 in.) (16:9),
36.1 - 722 mm (1 7/16 - 28 1/2 in.) (4:3)
F1.6 - 3.4
Filter diameter: 72 mm (2 7/8 in.)
Color temperature
[AUTO]
(one push) A/B
[INDOOR] (3 200K)
[OUTDOOR] (5 800K±7 offset levels)
[MANU WB TEMP] (2 300K - 15 000K in 100K steps)
Minimum illumination
1.5 lx (lux) (Fixed Shutter Speed 1/30, auto gain, auto iris) (F 1.6)
* When [SET] of [STEADYSHOT] is set to [STEADYSHOT] or [OFF]

Output connectors
VIDEO OUT jack
Pin connector
1 Vp-p, 75 Ω (ohms) unbalanced, sync negative
AUDIO OUT jacks
Pin connectors
-10 dBu (at load impedance 47 kΩ (kilohms)), Output impedance with less than 2.2 kΩ (kilohms)
(0 dBu = 0.775 Vrms)
COMPONENT OUT jack
Mini-D jack
Y: 1 Vp-p, 75 Ω (ohms)
PB/PR, CB/CR: 0.7 Vp-p, 75 Ω (ohms)
HDMI OUT jack
HDMI connector
SDI OUT jack
BNC
SMPTE292M/259M
(headphones) jack
Stereo-minijack (Ø 3.5 mm)

Input connectors
INPUT1/INPUT2 jacks
XLR 3-pin, female,
MIC: -48 dBu: 3 kΩ (kilohms)
(Variable in the range of between -60 dBu and -30 dBu in 6 dB step by the INPUT TRIM function)
LINE: +4 dBu: 10 kΩ (kilohms)
(0 dBu = 0.775 Vrms)

Input/Output connectors
USB jack
mini-B
Remote jack
Stereo mini-minijack (Ø 2.5 mm)
TC LINK IN/OUT jack
Pin connector
IN: 0.5 V to 18 Vp-p, 10 kΩ (kilohms)
OUT: 1.2 Vp-p, 75 Ω (ohms)
(IN/OUT switch-able)

LCD screen
Picture
8.0 cm (3.2 type, aspect ratio 16:9)
Total dot number
921 600 (1 920 × 480)

General
Power requirements
DC 7.2 V (battery pack)
DC 8.4 V (AC Adaptor/Charger)
Average power consumption*
During camera recording using the microphone ECM-XM1 and viewfinder with normal brightness: 7.9 W
During camera recording using the microphone ECM-XM1 and LCD with normal brightness: 7.9 W
* When Flash Memory Unit HXR-FMU128 is used, the average power consumption increases about 1.1 W.
Operating temperature
0 °C to 40 °C (32 °F to 104 °F)
Storage temperature
-20 °C to +60 °C (-4 °F to +140 °F)
Dimensions (approx.)
173 × 193 × 449 mm
(6 7/8 × 7 5/8 × 17 3/4 in.) (w/h/d) including the projecting parts
173 × 193 × 449 mm
(6 7/8 × 7 5/8 × 17 3/4 in.) (w/h/d) including the projecting parts with battery pack NP-F570
173 × 193 × 449 mm
(6 7/8 × 7 5/8 × 17 3/4 in.) (w/h/d) including the projecting parts with battery pack NP-F770
Mass (approx.)
2.2 kg (4 lb 15 oz) including the lens hood with lens cover
2.5 kg (5 lb 7 oz) including battery pack NP-F570, lens hood with lens cover and microphone (ECM-XM1)
2.6 kg (5 lb 11 oz) including battery pack NP-F770, lens hood with lens cover and microphone (ECM-XM1)

AC Adaptor/Charger AC-VL1
Power requirements
AC 100 V - 240 V, 50 Hz/60 Hz
Power consumption
22 W
Output voltage
DC 8.4 V*
Operating temperature
0 °C to 40 °C (32 °F to 104 °F)
Storage temperature
-20 °C to +60 °C (-4 °F to +140 °F)
Dimensions (approx.)
136 × 51 × 90 mm
(5 3/8 × 2 1/8 × 3 5/8 in.) (w/h/d) excluding the projecting parts
Mass (approx.)
270 g (9.6 oz) excluding the power cord (mains lead)
* See the label on the AC Adaptor/Charger for other specifications.

Rechargeable battery pack NP-F770 (supplied with HXR-NX5U)
Maximum output voltage
DC 8.4 V
Output voltage
DC 7.2 V
Maximum charge voltage
DC 8.4 V
Maximum charge current
3.0 A
Capacity
Typical: 31.7 Wh (4 400 mAh)
Minimum: 30.0 Wh (4 200 mAh)
Type
Li-ion

Rechargeable battery pack NP-F570 (supplied with HXR-NX5N)
Maximum output voltage
DC 8.4 V
Output voltage
DC 7.2 V
Maximum charge voltage
DC 8.4 V
Maximum charge current
3.0 A
Capacity
Typical: 15.8 Wh (2 200 mAh)
Minimum: 15.0 Wh (2 100 mAh)
Type
Li-ion

Design and specifications are subject to change without notice.

• Manufactured under license from Dolby Laboratories.

自己診断搭載機種 NXCAM AVCHD InfoLITHIUM MEMORY STICK HDMI PROGRESSIVE

概略仕様

システム
信号方式
カラー、E標準方式
、７２０/
ビデオ記録方式
画質：NP E

画質：NP E
音声記録方式
リニアＰＣＭ（４８ｋ　）
（４８ｋ
）
ドルビーデジタルステレオクリ
エーター搭載
静止画記録方式
準拠
準拠
準拠
記録メディア(動画・静止画)
"メモリースティック　デュオ"
フラッシュメモリーユニットSDメモリーカード、S IOBメモリーカード(ＣＩ　　)
ファインダー
電子ファインダー：カラー、モノクロ
画面サイズ：１．　(0．型、アスペクト比16：9)
総ドット数：1　　ドット
(B52×3[R G]×480相当)
撮像素子
（１/型)３ＣＭＯＳセンサー
総画素数：約１１２万画素
動画時有効画素数(１６：９モード)：約104万画素*
動画時有効画素数(４：３モード)：約78万画素*
ズームレンズ
Ｇレンズ
倍(光学)、約30倍(デジタル、デジタルエクステンダー［ON時)
～
カメラ換算*
～５９０mm(16：モード)
(4：モードでは36．～７２２mm)
～3．
フィルター径７２mm
色温度切り換え
オート
ワンプッシュ（A.)
屋内(3　　)
屋外(5　　±7段階)
色温度指定(2　　～15　　、100K刻み)
最低被写体照度
（ルクス)(シャッタースピード固定
(1/　)、オートゲインコントロール、アイリスオート)(F　)
* [S T　　]の[SE]が[S T　　]または[OFF] のとき

出力端子
V I　　端子
ピンジャック
、７５Ω不平衡、同期負
AUDIO　端子
ピンジャック
（４７kΩ負荷時)、出力インピーダンス
２．Ω以下
（0d　　)
COMP ONE　端子
ミニDIN端子
：１V.p７５Ω
B/ R, B/ R：0．、７５Ω
HDMI　端子
コネクタ
S IO　端子
型
規格準拠
∩(ヘッドホン)端子
ステレオミニジャック
（φ3．　)

入力端子
I　　端子
型3ピン×2、凹
：-　　：3kΩ
機能により、-　　～-
の範囲で可変(6dステップ)
：＋4d　：10kΩ
（0d　　)

入/出力端子
USB端子

リモート端子
ステレオミニミニジャック(φ2．　)
T　　端子
ピンジャック
：0．　～18Vp10kΩ
：1．　、７５Ω
（Iはスイッチによる切り換え)

液晶画面
画面サイズ
(3.型、アスペクト比16：)
総ドット数
ドット
横1　　×縦480

電源部、その他
電源電圧
(バッテリーパック使用時)　　I
(ACアダプターチャージャー使用時)　　60p
消費電力
マイク(E　　)、ファインダー使用時、G明るさ標準：7．　　AVCHD
マイク(E　　)、液晶画面使用時、明るさ標準：7．
フラッシュメモリーユニット　　2c　　Hz
使用時は、消費電力が約1．　　Hz
増えます。　　16b
動作温度
℃～40℃
保存温度
−20℃～+60℃　　DC F
外形寸法　　E
×193×449mm　　NP F
(突起部含む)(幅×高さ×奥行き)
本体質量　　PRO
約2．(レンズフード含む)
撮影時総質量　　a
約2．
(バッテリーパック(NP-　　)、レンズカバー付きフード、マイク(E　　)含む)　　1c　45

本機の仕様および外観は、改良のため予告なく変更することがありますが、ご了承ください。
・ドルビーラボラトリーズからの実施権に基づき製造されています。　　6．　3

20
f　　82．
35mm
29.　　9
3　　1
F　　4

1．
30
1．
E　　T　　E
F

Model information table

Model	HXR-NX5C	HXR-NX5E	HXR-NX5J	HXR-NX5N	HXR-NX5M	HXR-NX5P	HXR-NX5U
Destination	CH	AEP	J	E	AEP	E	US, CND
Color system	PAL	PAL	NTSC	NTSC	PAL	PAL	NTSC
GPS	×	○	○	○	×	○	○

• Abbreviation
CH　: Chinese model
CND : Canadian model
J　　: Japanese model

Caution
Danger of explosion if battery is incorrectly replaced.
Replace only with the same or equivalent type.
Dispose of used batteries according to the instructions.

SAFETY-RELATED COMPONENT WARNING!!

COMPONENTS IDENTIFIED BY MARK ⚠ OR DOTTED LINE WITH MARK ⚠ ON THE SCHEMATIC DIAGRAMS AND IN THE PARTS LIST ARE CRITICAL TO SAFE OPERATION. REPLACE THESE COMPONENTS WITH SONY PARTS WHOSE PART NUMBERS APPEAR AS SHOWN IN THIS MANUAL OR IN SUPPLEMENTS PUBLISHED BY SONY.

ATTENTION AU COMPOSANT AYANT RAPPORT À LA SÉCURITÉ!

LES COMPOSANTS IDENTIFIÉS PAR UNE MARQUE ⚠ SUR LES DIAGRAMMES SCHÉMATIQUES ET LA LISTE DES PIÈCES SONT CRITIQUES POUR LA SÉCURITÉ DE FONCTIONNEMENT. NE REMPLACER CES COMPOSANTS QUE PAR DES PIÈCES SONY DONT LES NUMÉROS SONT DONNÉS DANS CE MANUEL OU DANS LES SUPPLÉMENTS PUBLIÉS PAR SONY.

SAFETY CHECK-OUT

After correcting the original service problem, perform the following safety checks before releasing the set to the customer.

1. Check the area of your repair for unsoldered or poorly-soldered connections. Check the entire board surface for solder splashes and bridges.
2. Check the interboard wiring to ensure that no wires are "pinched" or contact high-wattage resistors.
3. Look for unauthorized replacement parts, particularly transistors, that were installed during a previous repair. Point them out to the customer and recommend their replacement.
4. Look for parts which, through functioning, show obvious signs of deterioration. Point them out to the customer and recommend their replacement.
5. Check the B+ voltage to see it is at the values specified.
6. Flexible Circuit Board Repairing
   - Keep the temperature of the soldering iron around 270°C during repairing.
   - Do not touch the soldering iron on the same conductor of the circuit board (within 3 times).
   - Be careful not to apply force on the conductor when soldering or unsoldering.

Unleaded solder

Boards requiring use of unleaded solder are printed with the leadfree mark (LF) indicating the solder contains no lead.
(Caution: Some printed circuit boards may not come printed with the lead free mark due to their particular size.)

: LEAD FREE MARK

Unleaded solder has the following characteristics.

- Unleaded solder melts at a temperature about 40°C higher than ordinary solder.
  Ordinary soldering irons can be used but the iron tip has to be applied to the solder joint for a slightly longer time.
  Soldering irons using a temperature regulator should be set to about 350°C.
  Caution: The printed pattern (copper foil) may peel away if the heated tip is applied for too long, so be careful!
- Strong viscosity
  Unleaded solder is more viscous (sticky, less prone to flow) than ordinary solder so use caution not to let solder bridges occur such as on IC pins, etc.
- Usable with ordinary solder
  It is best to use only unleaded solder but unleaded solder may also be added to ordinary solder.

注意
電池の交換は，正しく行わないと破裂する恐れがあります。
電池を交換する場合には必ず同じ型名の電池又は同等品と交換してください。
使用済み電池は，取扱指示に従って処分してください。

サービス，点検時には次のことにご注意ください。

1 .注意事項をお守りください。
サービスのとき特に注意を要する個所については，キャビネット，シャーシ，部品などにラベルや捺印で注意事項を表示しています。これらの注意書き及び取扱説明書等の注意事項を必ずお守り下さい。

2 .指定部品のご使用を
セットの部品は難燃性や耐電圧など安全上の特性を持ったものとなっています。従って交換部品は，使用されていたものと同じ特性の部品を使用して下さい。特に回路図，部品表に⚠印で指定されている安全上重要な部品は必ず指定のものをご使用下さい。

3 .部品の取付けや配線の引きまわしはもとどおりに
安全上，チューブやテープなどの絶縁材料を使用したり，プリント基板から浮かして取付けた部品があります。また内部配線は引きまわしやクランパによって発熱部品や高圧部品に接近しないよう配慮されていますので，これらは必ずもとどおりにして下さい。

4 .サービス後は安全点検を
サービスのために取外したネジ，部品，配線がもとどおりになっているか，またサービスした個所の周辺を劣化させてしまったところがないかなどを点検し，安全性が確保されていることを確認して下さい。

5 .チップ部品交換時の注意
- 取外した部品は再使用しないで下さい。
- タンタルコンデンサのマイナス側は熱に弱いため交換時は注意して下さい。

6 .フレキシブルプリント基板の取扱いについて
- コテ先温度を２７０℃前後にして行なって下さい。
- 同一パターンに何度もコテ先を当てないで下さい。（3 回以内）
- パターンに力が加わらないよう注意して下さい。

7 .無鉛半田について
無鉛半田を使用している基板には，無鉛（Ｌ　　）を意味するレッドフリーマークがプリントされています。
（注意：基板サイズによっては，無鉛半田を使用していてもレッドフリーマークがプリントされていないものがあります）

：レッドフリーマーク

無鉛半田には，以下の特性があります。

- 融点が従来の半田よりも約４０℃高い。
  従来の半田こてをそのまま使用することは可能ですが，少し長めにこてを当てる必要があります。温度調節機能のついた半田こてを使用する場合，約350℃に設定して下さい。
  注意： 半田こてを長く当てすぎると，基板のパターン（銅箔）がはがれてしまうことがありますので，注意して下さい。
- 粘性が強い
  従来の半田よりも粘性が強いため，Ｉ 端子などが半田ブリッジしないように注意して下さい。
- 従来の半田と混ぜて使用可能
  無鉛半田には無鉛半田を追加するのが最適ですが，従来の半田を追加しても構いません。

1-1. POWER SUPPLY DURING REPAIRS

In this unit, about 10 seconds after power is supplied to the battery terminal using the regulated power supply (8.4V), the power is shut off so that the unit cannot operate.
These following method is available to prevent this.

Method:

Use the AC adaptor/charger (AC-VQ1050 etc.) and connecting cord (DK-415).

1-2. PRECAUTION ON REPLACING THE VC-582 BOARD

DESTINATION DATA

When you replace to the repairing board, the written destination data of repairing board also might be changed to original setting.
Start the Adjust Manual in the Adjust Station and execute the “Destination data write”.

USB SERIAL SAVE

When you replace to the repairing board, get the data from the former one.
Start the Adjust Manual in the Adjust Station and perform “USB SERIAL SAVE” to get the data.

USB SERIAL No.

The set is shipped with a unique ID (USB Serial No.) written in it.
This ID has not been written in a new board for service, and therefore it must be entered after the board replacement.
Start the Adjust Manual in the Adjust Station and execute the “USB serial No. input”.

1-3. SELF-DIAGNOSIS FUNCTION

1-3-1. Self-diagnosis Function

When problems occur while the unit is operating, the self-diagnosis function starts working, and displays on the Viewfinder or the LCD screen what to do. This function consists of two display; selfdiagnosis display and service mode display.
Details of the self-diagnosis functions are provided in the Instruction manual.

1-3-2. Self-diagnosis Display

When problems occur while the unit is operating, the counter of the Viewfinder or the LCD screen shows a 4-digit display consisting of an alphabet and numbers, which blinks at 3.2 Hz. This 5-character display indicates the “repaired by:”, “block” in which the problem occurred, and “detailed code” of the problem.

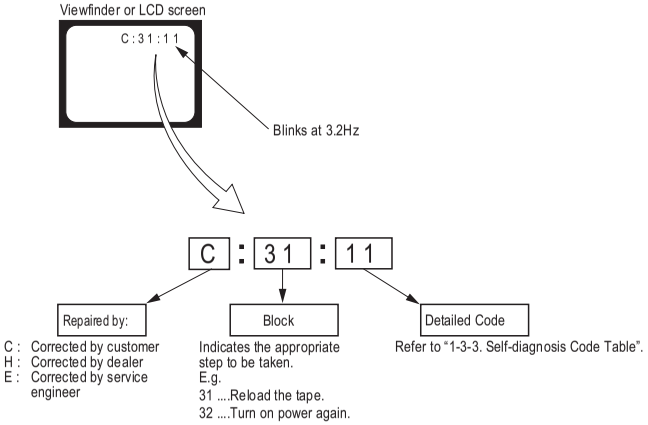

– ENGLISH –

1-3-3. Self-diagnosis Code Table

Self-diagnosis Code					Symptom/State	Correction
Repaired by:	Block Function		Detailed Code			
C	0	4	0	0	Non-standard battery is used.	Use the InfoLITHIUM battery.
C	0	6	0	0	The battery pack temperature is high.	Change the battery pack or place it in a cool place.
C	1	3	0	1	“memory card” is unformatted. “memory card” is broken.	Format the “memory card”. Insert a new “memory card”
C	1	3	0	4	The external storage media has connected loose.	Insert again the external storage media precisely.
					Abnormality occurs in the external storage media.	Format again the external storage media.
					The external storage media is broken.	Replace it with new one.
					Abnormality occurs in between the main and the external storage media.	Turn power off and turn power on again.
C	3	2	6	0	Difficult to adjust focus (Cannot initialize focus)	Retry turn the power on by the power switch. If it does not recover, check the focus MR sensor of lens block (pin ⑩, ⑫ of CN6602 on the VC-582 board). If it is OK, check the focus motor drive IC (IC6002 on the VC-582 board).
E	2	0	0	0	Flash memory data are rewritten.	Make flash memory data correct value. (Note 1)
E	6	1	1	0	Zoom operations fault (Cannot initialize zoom lens.)	Inspect the lens block zoom MR sensor (pin ㉜, ㉞ of CN6602 on the VC-582 board) when zooming is performed when the zoom lever is operated, or the zoom motor drive circuit (IC6002 on the VC-582 board) when zooming is not performed.
E	6	1	1	1	The abnormalities in initialization of the focus lens and the abnormalities in initialization of the zoom lens occurred simultaneously.	Check both C: 32: 60 and E: 61: 10 of the self-diagnosis code.
E	6	1	3	0	Reset position detect error when stepper iris is initialized.	Turn on the power and set to T (telephoto) end by rotating the ZOOM manual ring. While observing the iris blades in the lens, turn on the power again and check the iris blades in the lens work properly. Inspect the iris drive motor of lens drive block (Pin ⑯ to ⑲ of CN6602 on the VC-582 board), when the iris does not operate. Inspect the iris reset sensor of lens drive block (Pin ⑬ to ⑮ of CN6602 on the VC-582 board), when the iris operate.
E	6	2	0	0	Steadyshot function does not work well. (With pitch angular velocity sensor output stopped.)	Inspect pitch angular velocity sensor (SE8501 on the GY-022 board) peripheral circuits.
E	6	2	0	1	Steadyshot function does not work well. (With yaw angular velocity sensor output stopped.)	Inspect yaw angular velocity sensor (SE8502 on the GY-022 board) peripheral circuits.
E	6	2	0	2	Abnormality of IC for steadyshot.	Inspect the steadyshot circuit (IC6401 on the VC-582 board). If it does not recover, replace the VC-582 board. (Note 2) If an error occurs again, replace the lens block.
E	6	2	0	3	IC for steadyshot and micro controller communication abnormality among.	Inspect the steadyshot circuit (IC6401 on the VC-582 board).
E	6	2	1	0	Shift lens initializing failure	Inspect the EEPROM (IC5602, IC5603 on the VC-582 board). If it does not recover, replace the VC-582 board. (Note 2) If an error occurs again, replace the lens block.

Note 1: Start the Adjust Manual in the Adjust Station and refer to the “Destination data write”.
Note 2: When replacing the VC-582 board, remove the EEPROM (IC5602, IC5603) from the VC-582 board that is going to be repaired. Install the removed EEPROM (IC5602, IC5603) to the replaced VC-582 board.

Self-diagnosis Code					Symptom/State	Correction
Repaired by:	Block Function		Detailed Code			
E	6	2	1	1	Shift lens overheating (Pitch)	Inspect the IC6401 and peripheral circuits on the VC-582 board. If it does not recover, replace the VC-582 board. (Note) If an error occurs again, replace the lens block.
E	6	2	1	2	Shift lens overheating (Yaw)	Inspect the IC6401 and peripheral circuits on the VC-582 board. If it does not recover, replace the VC-582 board. (Note) If an error occurs again, replace the lens block.
E	6	2	2	0	Abnormality of lens thermister	Inspect the IC6401 and peripheral circuits on the VC-582 board. If it does not recover, replace the VC-582 board. (Note) If an error occurs again, replace the lens block.
E	9	2	0	1	Battery current value goes over the max discharge current	Check the remaining battery power because this symptom maybe depended on the remaining battery level, and confirm whether or not the symptom is occurred after replacing the battery. If the symptom is still occurred, overhaul inspection is needed. Connect the GC-012 board with VC-582 board through the FP-1161 (VC-GC) flexible board. Connect the GC-012 board with Control Switch Block (PS94000). Check each output of DC/DC converter (IC5201) on VC-582 board with connected the DC/Batt harness (the minimum connection to periphery) to VC-582 board.
E	9	4	0	0	Fault of writing or erasing the flash memory	Inspect the flash memory (IC2601 on the VC-582 board).
E	9	4	0	1	Internal flash memory fault	Inspect the flash memory (IC2601 on the VC-582 board).
E	9	4	0	2	BGM data error	Inspect the flash memory (IC2601 on the VC-582 board). If it is OK, check the CPU (IC2001 on the VC-582 board).
E	9	5	0	0	GPS hardware error	Check whether the flexible board of the GPS module is broken, and check whether it is inserted imperfectly. If there is no problem the flexible board, inspect or replacement of the GPS module.

Note: When replacing the VC-582 board, remove the EEPROM (IC5602, IC5603) from the VC-582 board that is going to be repaired. Install the removed EEPROM (IC5602, IC5603) to the replaced VC-582 board.

1-4. GPS RECEIVING CHECK(NX5E/NX5J/NX5N/NX5P/NX5U)

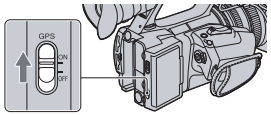

Set the GPS switch to ON.

appears, and your camcorder starts trying to triangulate. When your camcorder triangulates successfully, it will record the location information at the time movies were recorded.

Notes
- The indicator changes according to the strength of GPS signal reception.

Triangulating status	GPS indicators	GPS reception status
Function off	No indicator	The GPS switch is set to OFF, or the GPS receiver is not functioning normally.
Difficult		The camcorder cannot find a GPS signal, therefore, it cannot triangulate. Use the camcorder in an open area.
Searching		The camcorder is searching the GPS signal. It may take several minutes until the camcorder triangulates.
Triangulating		The camcorder is receiving a weak GPS signal.
Triangulating		The camcorder is receiving a GPS signal, and can acquire location information.
Triangulating		The camcorder is receiving a strong GPS signal, and can acquire location information.

- Even if a triangulating status indicator is displayed, the camcorder may not record the GPS information continuously, depending on the condition of GPS signal reception.

1-5. PRECAUTION ON REPLACING THE GY-022 BOARD

Angular Velocity Sensor

When you replace to the reparing board, write down the sensitivity displayed on the angular velocity sensor (SE8501, SE8502).
Start the Adjust Manual in the Adjust Station and execute the “GYRO sensor sensitivity adj”.

GY-022 BOARD (SIDE A)

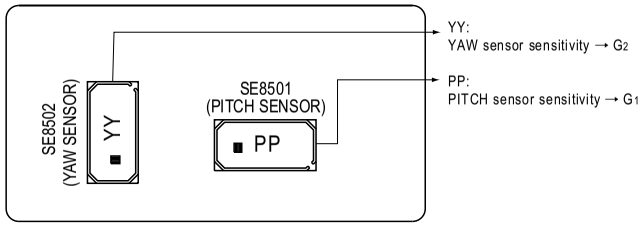

Note: The sensor sensitivity of SE8501, SE8502 of GY-022 board is written only repair parts.

1 - 修理時の電源供給について

本機では，安定化電源（8 . ）からバッテリ端子に電源を供給した場合，約1 0 秒後にシャットオフし，動作しなくなります。これを避けるため，下記の方法を用いてください。

方法：
AC アダプタ チャージャ（AC など）と接続コード（DC ）を使用する。

1 - V 基板交換時の注意

仕向けデータ
補修用基板と交換する時，補修用基板に書かれている仕向けデータは元の設定と違っている場合があります。
Ad から Ad を起動させて「De 」を実行させてください。

US シリアルセーブ
補修用基板と交換する時，交換前の基板よりUS シリアル番号を取得してください。
データの取得は Ad から Ad を起動させて「US 」を実行させてください。

US シリアル No.
セットは，1 台毎に異なる固有の（US ）を書き込んだ後，出荷されています。
新品の補修用基板には，このが書き込まれていないので，基板交換後にを入力する必要があります。
Ad から Ad を起動させて「US 」を実行させてください。

1 - 自己診断機能

1 - 自己診断機能について

本機の動作に不具合が生じたとき，自己診断機能が働き，ビューファインダまたはL 画面に，どう処置したらよいか判断できる表示を行います。「自己診断表示」と「サービスモード表示」の２つの表示があります。自己診断機能については取扱説明書にも掲載されています。

1 - 自己診断表示

本機の動作に不具合が生じたとき，ビューファインダまたはL 画面のカウンタ表示部分がアルファベットと数字の4 桁表示になり，3 で点滅します。この5 文字の表示によって対応者分類および不具合の生じたブロックの分類，不具合の詳細コードを示します。

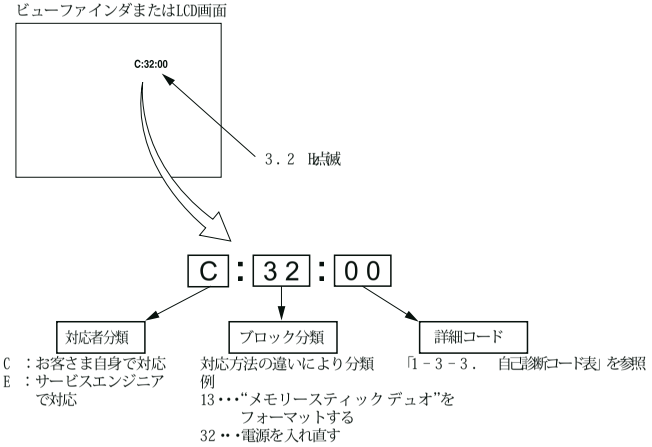

1 - 自己診断コード表

自己診断コード			症状／状態	対応／方法
対応者	ブロック機能	詳細コード		
C	0 4	0 0	標準でないバッテリを使用している	インテリジェントリチウムバッテリを使用する。
C	0 6	0 0	バッテリが高温になっている	バッテリを交換するか、バッテリを涼しいところに置く。
C	1 3	0 1	フォーマットしていない“メモリースティック”を入れたメモリーカードが壊れている	メモリーカードをフォーマットする。 新しいメモリーカードに交換する。
C	1 3	0 4	外部メディアの装着接触不良があった	外部メディアを装着しなおす。
			外部メディアに異常が発生した	外部メディアをフォーマットしなおす。
			外部メディアが壊れている	新しい外部メディアに交換する。
			外部メディアと本体との間でなんらかの異常があった	電源を入れ直す。
C	3 2	6 0	フォーカスが合いにくい （フォーカスの初期化ができない）	操作スイッチの電源を入れ直す。 復帰しない場合，レンズブロックのフォーカスMRセンサ（VC- 基板CN602⑩，⑫ピン）を点検する。 異常なければフォーカスモータ駆動回路（VC- 基板IC ）を点検する。
E			フラッシュメモリが書き換えられている	フラッシュメモリのデータを元の値に戻す。（注意1）
E			ズーム動作の異常 （ズームレンズの初期化ができない）	ズームレバーを操作したときにズーム動作をすれば，レンズブロックのズームMRセンサ（VC- 基板CN602㉜，㉞ピン）を点検する。 ズーム動作をしなければズームモータ駆動回路（VC- 基板IC ）を点検する。
E			フォーカスレンズ初期化異常，ズームレンズ初期化異常の同時発生	自己診断コードC32：60とE61：10の両方を点検する。
E			ステッパアイリス初期化時リセット位置検出エラー	電源投入後，ズームマニュアルリングを回してT（tele）端にする。レンズ内のアイリス羽に注目しながら電源を再投入し，レンズ内の羽が動作しているか確認する。アイリスが動作しない場合は，レンズドライブブロックのアイリスモータドライブ（VC- 基板CN602⑯～⑲ピン）を点検。 アイリスが動作する場合は，レンズドライブブロックのアイリスリセットセンサ（VC- 基板CN602⑬～⑮ピン）を点検。
E			手振れ補正が効きにくい （P角速度センサ出力張り付き）	P角速度センサ（GY- 基板S ）周辺回路を点検。
E			手振れ補正が効きにくい （YAW角速度センサ出力張り付き）	YAW角速度センサ（GY- 基板S ）周辺回路を点検。
E	2	0 2	手振れ補正用IC の異常	手振れ補正回路（VC- 基板IC ）を点検。復帰しない場合，VC- 基板を交換する。（注意2）エラーが再度発生する場合は，レンズブロックを交換する。
E			手振れ補正用IC とマイクロコントローラとの通信異常	手振れ補正回路（VC- 基板IC ）を点検。
E			シフトレンズ初期化異常	E（VC- 基板IC CN603）を点検。復帰しない場合，VC- 基板を交換する。（注意2）エラーが再度発生する場合は，レンズブロックを交換する。
E			シフトレンズオーバーヒート	VC- 基板のIC および周辺回路を点検。復帰しない場合，VC- 基板を交換する。（注意2）エラーが再度発生する場合は，レンズブロックを交換する。

注意1 ： Ad から Ad を起動させて，「 」を参照してください。
注意2 ： VC- 基板を交換する場合は，修理するVC- 基板からE（IC CN603）を取り外してください。取り外したE（IC ）は取り替えたVC- 基板に取り付けてください。

自己診断コード			症状／状態	対応／方法
対応者	ブロック機能	詳細コード		
E			シフトレンズオーバーヒート (	VC- 基板のI および周辺回路を点検。復帰しない場合，VC- 基板を交換する。(注意)エラーが再度発生する場レンズブロックを交換する。
E			レンズサーミスタの異常	VC- 基板のI および周辺回路を点検。復帰しない場合は，VC- 基板を交換する。(注意)エラーが再度発生する場合は，レンズブロックを交換する。
E			バッテリーの電流値が最大放電電流を超えた	バッテリ残量に依存する場合があるので，バッテリ残量を確認する。 次にバッテリを交換して症状が出るか確認する。 バッテリを交換しても症状が出る場合は，エラー発生後に電源が切れてしまうため，分解して確認する。 VC- 基板にG- 基板をF フレキシブル基板で接続する。 GC- 基板とコントロールスイッチブロック(P)を接続する。 DC/バッテリハーネスをVC- 基板に接続した状態最小限の接続で DC／コンバータ 基板I の各チャンネル出力を確認する。
E			フラッシュメモリの書込み消去動作不良	フラッシュメモリ(V 基板)を点検する。
E			フラッシュメモリ内部異常	フラッシュメモリ(V 基板)を点検する。
E			データ異常	フラッシュメモリ(V 基板)を点検する。 異常がない場合は，P (VC- 基板)を点検する。
E			ハードウェア異常	GP モジュールのフレキシブル基板が切れていないか，また完全に挿入されているかを点検する。フレキシブル基板に問題がない場合は，GP モジュールの点検または交換をする。

注意：VC- 基板を交換する場合は，修理するV- 基板からE (I 603)を取り外してください。取り外したE (I)は取り替えたV 基板に取り付けてください。

1 - GP受信確認(

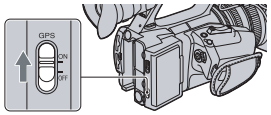

582 6401
2 YAW) 582

582 6401
GPスイッチを「ON」にする。 582

が表示され、測位準備が行われます。
測位できた場合、動画の撮影時に測位情報を記録します。

ご注意
・衛星からの電波の受信状況によって画面に表示されるアイコンが変わります。 582 012 P (

測位状況	画面表示	GP受信状況
機能切	非表示	GPスイッチが「OFF」になっている、またはエラーが起きている。
測位困難		GP信号を受信できないため、測位情報が取れない。空の開けた場所に移動してください。
衛星検索中		衛星を検索中です。測位中になるまで数分かかることがあります。
測位中		弱い信号を受信中。
測位中		信号を受信中。測位情報を取得できる。
測位中		強い信号を受信中。測位情報を取得できる。

582 I
582 I
582 I
U 582 I

・「測位中」になっていても、電波の受信状況により情報の記録が途切れることがあります。

1 - 基板交換時の注意

582 582 E 6602, E
角速度センサ 582

補修用基板と交換する時，角速度センサ(S ，S)の感度表示を書き留めてください。
Ad から Ad を起動させて「GYRO 」を実行させてください。

GY-022 BOARD (SIDE A)

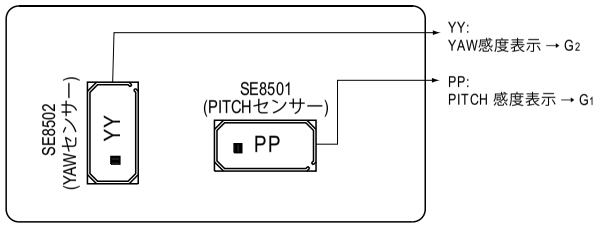

No ： 基板のS 感度表示は補修用基板にのみ記載されています。

IDENTIFYING PARTS

Follow the disassembly in the numerical order given.

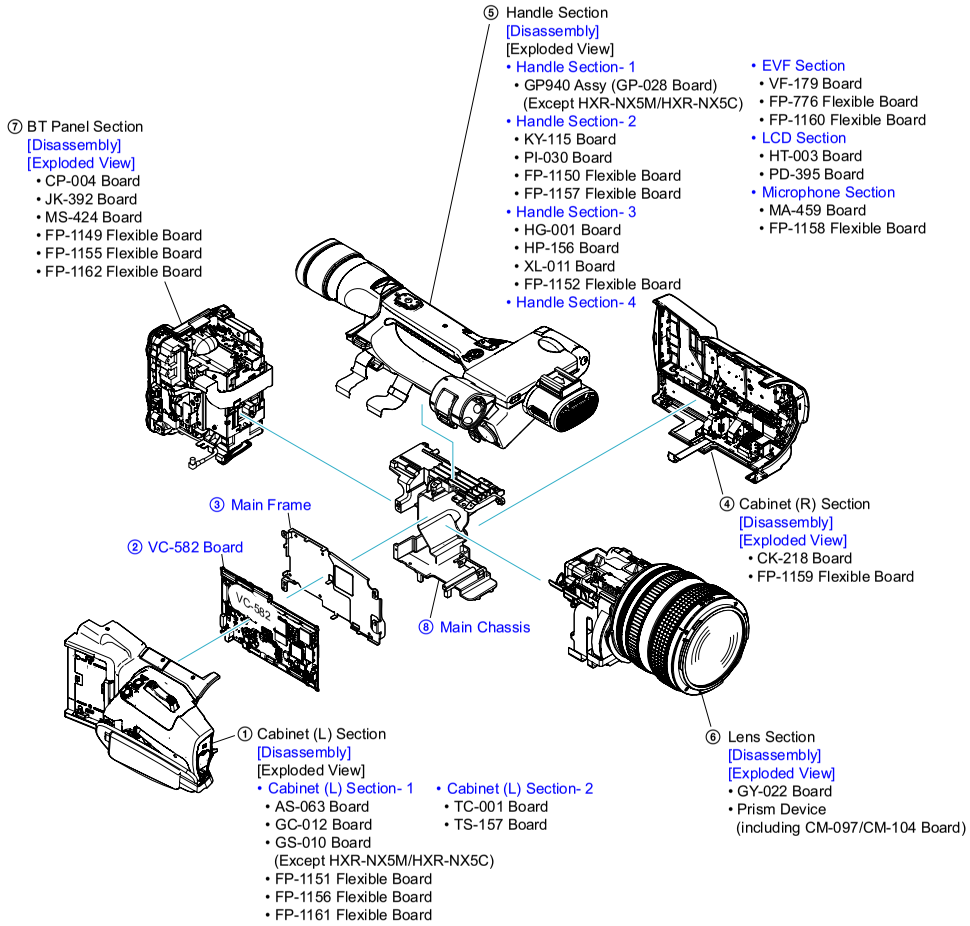

Link ACCESSORIES ASSEMBLY

(ENGLISH)

NOTE:

- -XX, -X mean standardized parts, so they may have some differences from the original one.
- Items marked "*" are not stocked since they are seldom required for routine service. Some delay should be anticipated when ordering these items.
- The mechanical parts with no reference number in the exploded views are not supplied.
- Due to standardization, replacements in the parts list may be different from the parts specified in the diagrams or the components used on the set.
- CAPACITORS:
  uF: µF
- COILS
  uH: µH
- RESISTORS
  All resistors are in ohms.
  METAL: metal-film resistor
  METAL OXIDE: Metal Oxide-film resistor
  F: nonflammable
- SEMICONDUCTORS
  In each case, u: µ, for example:
  uA...: µA... , uPA... , µPA... ,
  uPB... , µPB... , µPC... , µPC... ,
  uPD..., µPD...

When indicating parts by reference number,please include the board name.

The components identified by mark ⚠ or dotted line with mark ⚠ are critical for safety.
Replace only with part number specified.

Les composants identifiés par une marque ⚠ sont critiques pour la sécurité.
Ne les remplacer que par une pièce portant le numéro spécifié.

(JAPANESE)

【使用上の注意】
ここに記載されている部品は補修用部品であるため回路図及びセットに付いている部品と異なる場合があります。
は標準化部品のためセットに付いている部品と異なる場合があります。
印の部品は常備在庫しておりません。
コンデンサの単位でuはμを示します。
抵抗の単位Ωは省略してあります。
金　　被：金属被膜抵抗。
サンキン：酸化金属被膜抵抗。
インダクタの単位でuはμHを示します。
半導体の名称でuA uP uP uP 等はそれぞれ µA µP µP µP µP を示します。

お願い
図面番号で部品を指定するときは基板名又はブロックを併せて指定してください。

⚠印の部品，または⚠印付の点線で囲まれた部品は，安全性を維持するために，重要な部品です。
従って交換時は，必ず指定の部品を使用してください。

- Abbreviation
  CH : Chinese model
  CND : Canadian model
  J : Japanese model

View Position

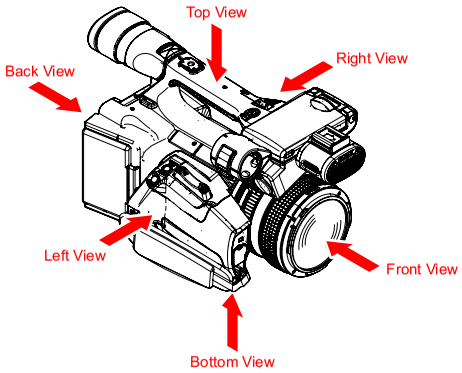

– ENGLISH –

NOTE FOR REPAIR

- Make sure that the flat cable and flexible board are not cracked of bent at the terminal.
  Do not insert the cable insufficiently nor crookedly.
- When remove a connector, don't pull at wire of connector. It is possible that a wire is snapped.
- When installing a connector, don't press down at wire of connector.
  It is possible that a wire is snapped.
- Do not apply excessive load to the gilded flexible board.

Cut and remove the part of gilt which comes off at the point.
(Be careful or some pieces of gilt may be left inside)

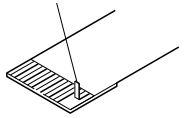

NOTE FOR DISCONNECTING THE HARNESS (COAXIAL CABLE)

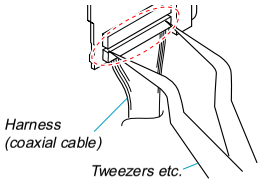

When disconnecting the harness (COAX IAL CABL E), do not pull the harness part but pull off the connector body with tweezers etc.

– JAPANESE –

修理時の注意

- フラットケーブルおよびフレキシブル基板の端子面に欠け，折れ等がないことを確認する。
  また，コネクタへの接続は，差し込み不足や斜め差しにならないように注意する。
- コネクタを取り外す時に，線材部（極細）を持って引っ張ると断線する恐れがありますので，絶対に線材部（極細）を持って引っ張らないでください。
- 線材部（極細）を押さえながらコネクタを差し込むと，線材部（極細）が断線する恐れがありますので，絶対に線材部（極細）には負担をかけないでください。
- 金メッキされているフレキシブル基板には，強い負担をかけないでください。

先端の剥がれたメッキ部はカットして除去してください。
（メッキ破片がコネクタ内に残っている場合もあるので注意してください）

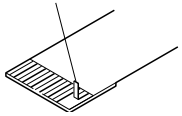

ハーネス（同軸ケーブル）の交換について

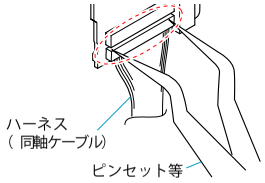

ハーネス（同軸ケーブル）を引き抜く際は、ハーネス部を引かず、ピンセット等でコネクタ部を引いてください。

2-1. EXPLODED VIEWS

2-1-1. OVERALL SECTION

ns: not supplied

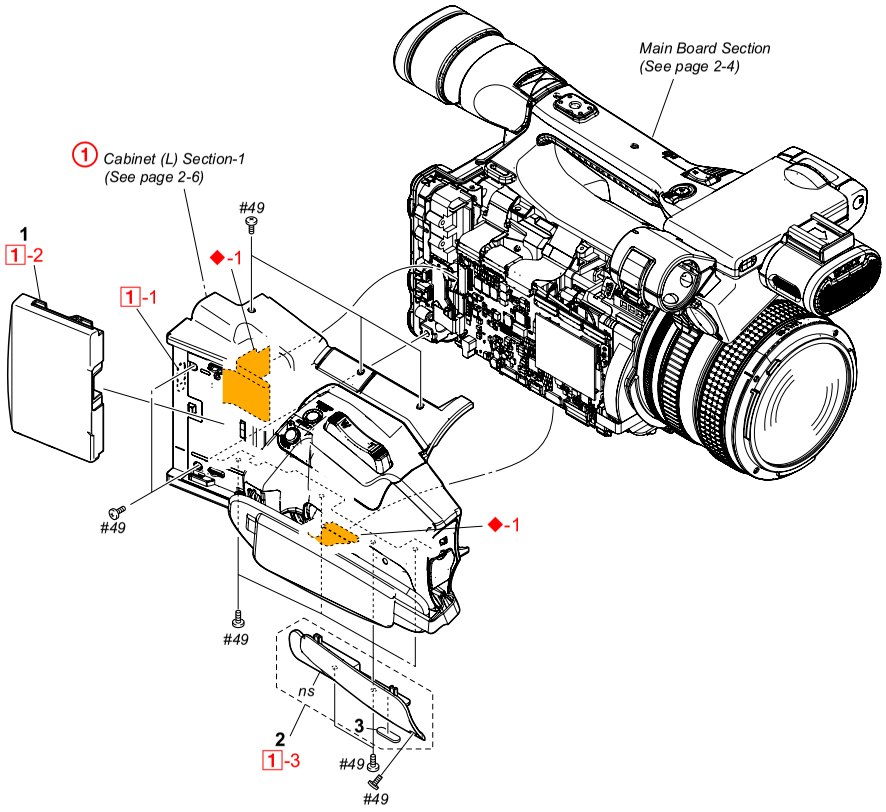

Ref. No.	Part No.	Description
1	4-165-238-01	COVER, EXT DUMMY
2	X-2515-789-1	COVER ASSY, GRIP
3	2-178-805-01	FOOT, RUBBER
#49	2-630-005-31	SCREW (M2), NEW TRUSTER, P2

DISASSEMBLY

1. Remove to numerical order ① (1-1 to 1-3) in the left figure.
2. The meaning of the sign in left figure is as follows. Be careful when it removes.
   ◆-X: Flexible Board, Flat Cable, Harness

① Release button (1-1) → EXT Dummy Cover (1-2) → #49 X 3 → Grip Cover Assy (1-3)

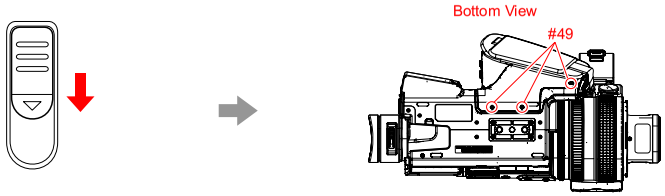

→ Flexible Board → #49 X 8

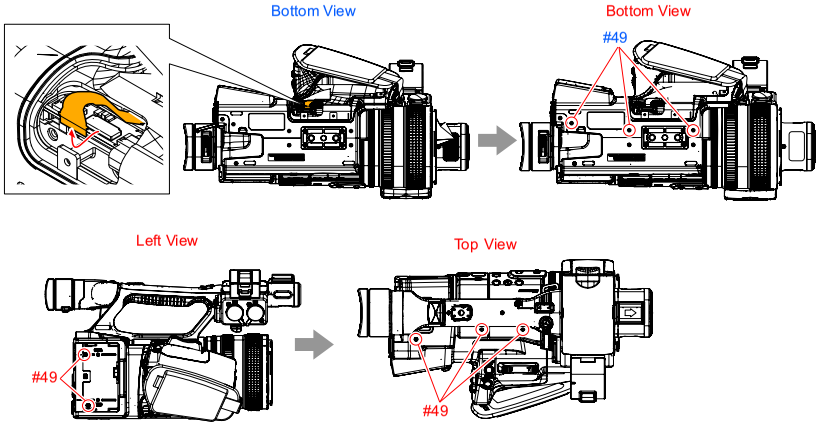

Screw

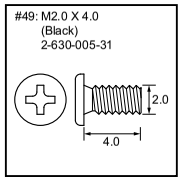

2-1-2. MAIN BOARD SECTION

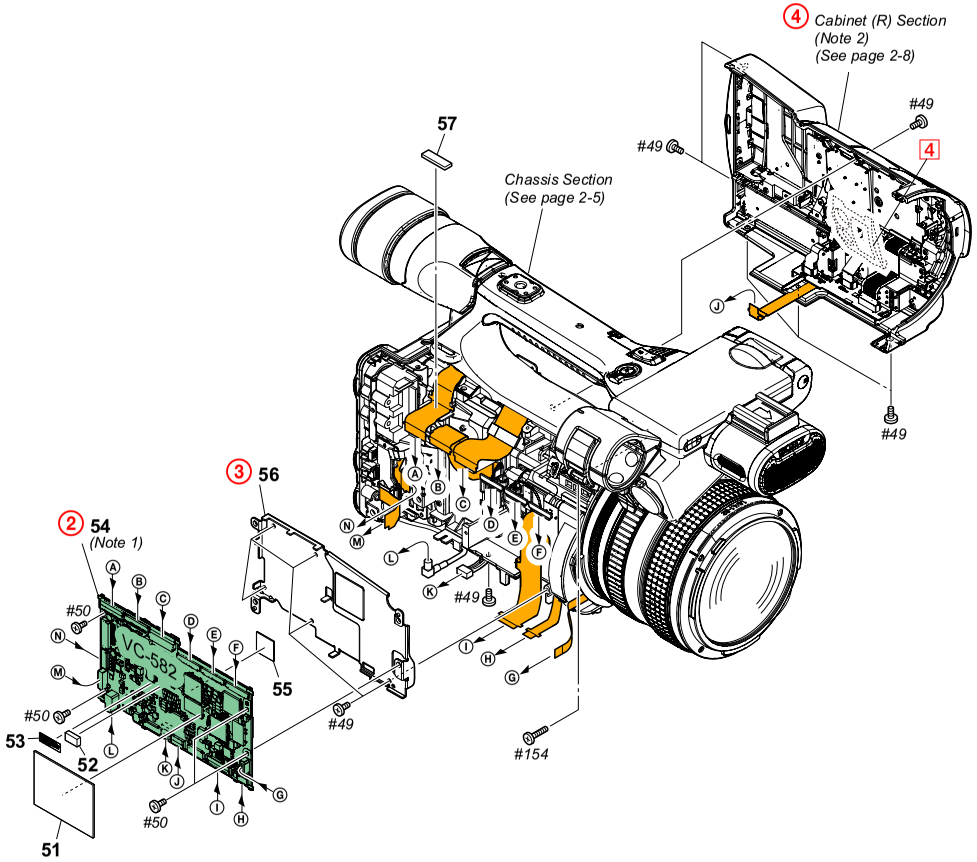

Ref. No.	Part No.	Description
* 51	4-165-223-01	SHEET (4535T1), RADIATION
* 52	4-170-751-01	SPACER (A), VC
* 53	4-165-995-01	LABEL, FUSE
54	A-1758-578-A	VC-582 BOARD, COMPLETE (SERVICE) (Note 1)
* 55	4-166-044-01	SPACER (B), VC
* 56	4-165-252-01	FRAME, MAIN
* 57	4-175-181-01	SHEET (FP1152), WATERPROOF
#49	2-630-005-31	SCREW (M2), NEW TRUSTER, P2
#50	2-891-494-11	SCREW (M2), NEW TRUSTER, P2
#154	7-627-556-97	SCREW, PRECISION +P2.6X8 TYPE 1

DISASSEMBLY

1. Remove to numerical order (② to ④) in the left figure.
2. The meaning of the sign in left figure is as follows. Be careful when it removes.
   ◆-X: Flexible Board, Flat Cable, Harness

② #50 X 4

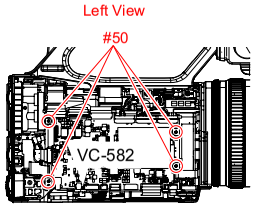

③ #49 X 6

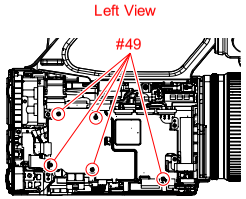

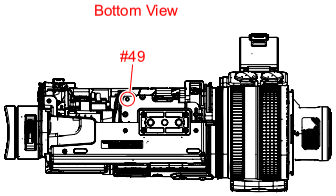

④ Open Lid AL (4) → #49 X 6 → #154 X 1

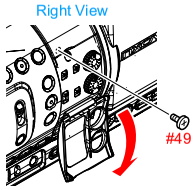

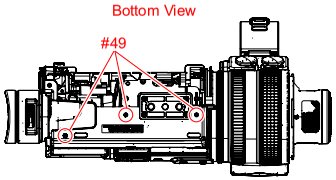

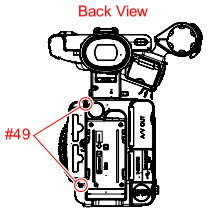

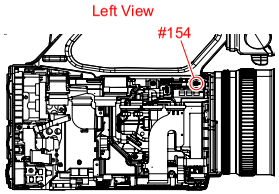

Screw

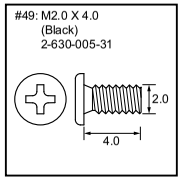

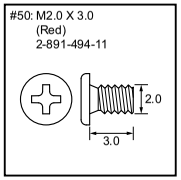

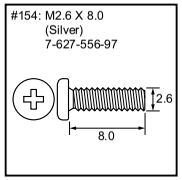

Note

Note 1: Refer to "Assembly-8: How to arrange Harness (Coaxial Cable)" when installing.

Note 2: Refer to "Assembly-7: On installation of the Cabinet (R) section, adjust the position of the ND filter switch" when installing.

Note 1: 組立時は"
Ⓐを参照してください。

Note 2: 組立時は"
s us t を参
照してください。

2-1-3. CHASSIS SECTION

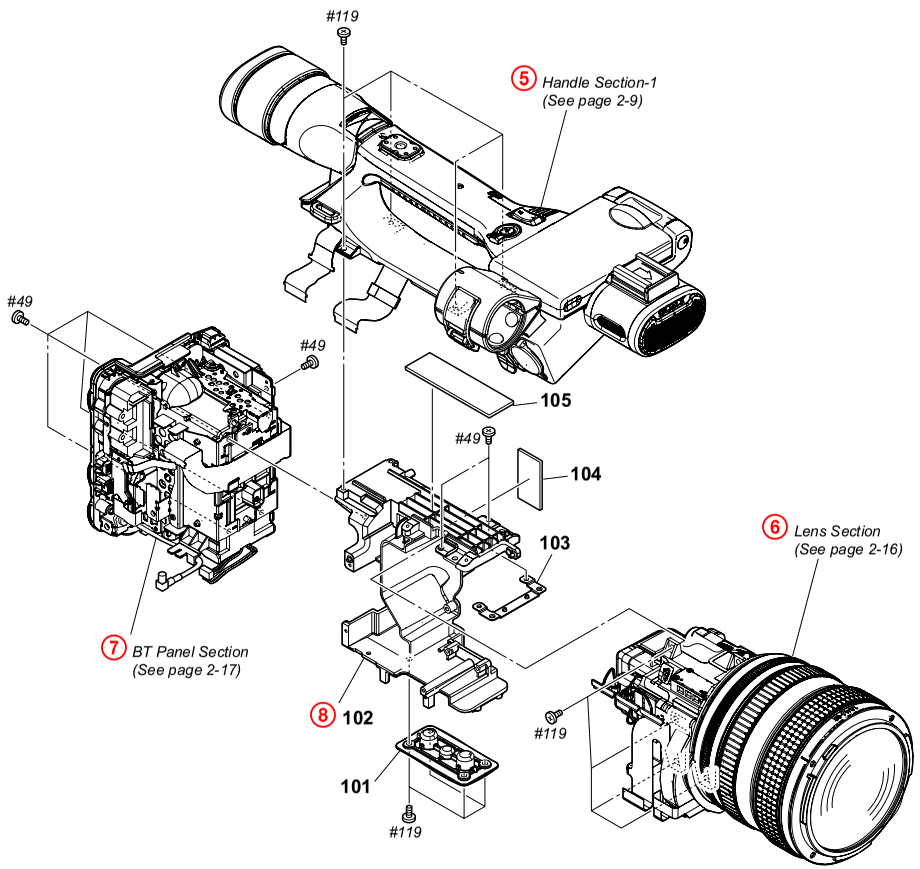

Ref. No.	Part No.	Description
101	4-119-234-11	WASHER, TRIPOD
* 102	4-165-251-01	CHASSIS, MAIN
103	4-119-237-01	PLATE (F), MC FIXED
* 104	4-165-225-01	SHEET (3218T1), RADIATION
105	4-165-224-01	SHEET (6018T1), RADIATION

Ref. No.	Part No.	Description
#49	2-630-005-31	SCREW (M2), NEW TRUSTER, P2
#119	7-627-556-58	SCREW +P 2.6X5

DISASSEMBLY

1. Remove to numerical order (5 to 8) in the left figure.
2. The meaning of the sign in left figure is as follows. Be careful when it removes.

5 #119 X 4

Top View

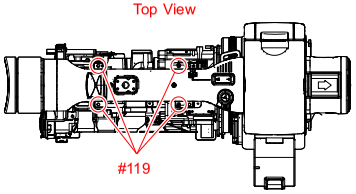

6 #119 X 4

Left View

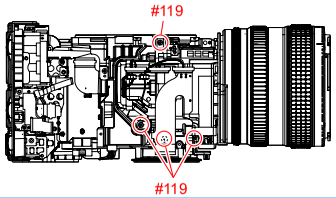

7 #49 X 5

Back View

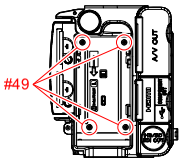

Right View

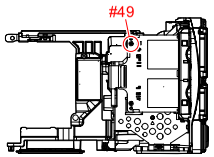

Screw

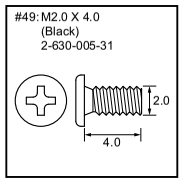

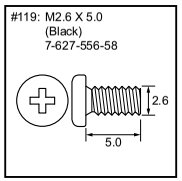

2-1-4. CABINET (L) SECTION-1

ns: not supplied

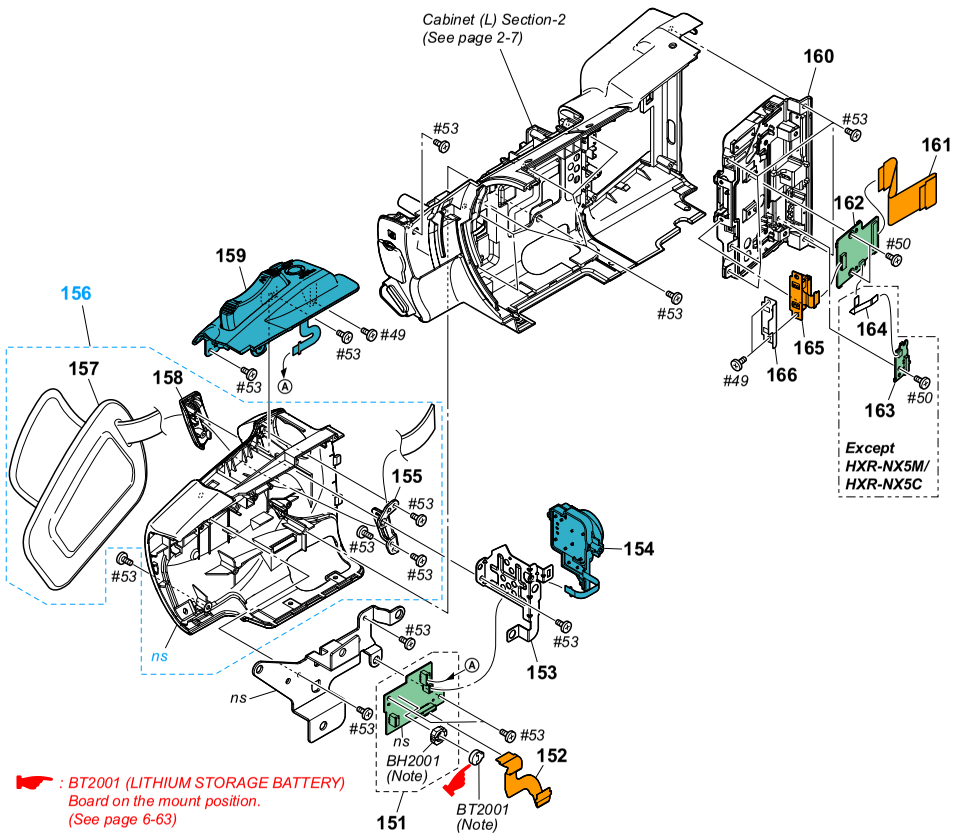

Ref. No.	Part No.	Description
151	A-1752-113-A	GC-012 BOARD, COMPLETE
152	1-879-860-11	FP-1161 FLEXIBLE BOARD
* 153	4-165-326-01	FRAME, PS
154	1-487-447-11	SWITCH BLOCK, CONTROL (PS94000)
* 155	4-165-331-01	BRACKET (REAR), GRIP BELT
156	X-2515-778-1	CABINET (G (94000)) ASSY
157	2-178-804-01	BELT, GRIP
* 158	4-165-330-01	HOLDER, GRIP BELT
159	1-487-448-11	SWITCH BLOCK, CONTROL (PZ94000)
160	X-2515-779-1	CABINET (S (94000)) ASSY (EXCEPT HXR-NX5M/HXR-NX5C)
160	X-2515-788-1	CABINET (S (94003)) ASSY (HXR-NX5M/HXR-NX5C)
161	1-879-855-11	FP-1156 FLEXIBLE BOARD
162	A-1752-127-A	AS-063 BOARD, COMPLETE
163	A-1752-124-A	GS-010 BOARD, COMPLETE (EXCEPT HXR-NX5M/HXR-NX5C) (Note 2)
164	1-837-242-11	CABLE, FLEXIBLE FLAT (FFC-202) (EXCEPT HXR-NX5M/HXR-NX5C)
165	A-1752-135-A	FP-1151 FLEXIBLE BOARD, COMPLETE
* 166	4-165-336-01	RETAINER, EXT CONNECTOR (M)
⚠ BT2001	1-756-134-12	BATTERY, STORAGE, LITHIUM (Note 1)
⚠ BH2001	1-756-615-61	HOLDER, BATTERY (Note 1)
#49	2-630-005-31	SCREW (M2), NEW TRUSTER, P2
#50	2-891-494-11	SCREW (M2), NEW TRUSTER, P2
#53	3-080-206-21	SCREW, TAPPING, P2

Screw

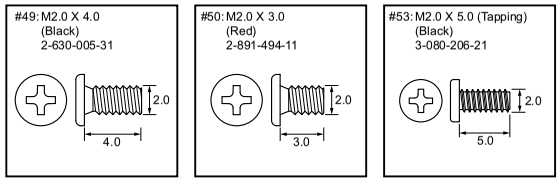

Note

Caution :
Danger of explosion if battery is incorrectly replaced.
Replace only with the same or equivalent type.
Dispose of used batteries according to the instructions.

注意：
電池の交換は，正しく行わないと破裂する恐れがあります。
電池を交換する場合には必ず同じ型名の電池又は同等品と交換してください。
使用済み電池は，取扱指示に従って処分してください。

Note 1: Replace the battery holder (BH2001) together when replacing the lithium storage battery (BT2001) on the GC-012 board. (The battery holder removed once cannot be used again.)
When mounting these parts, mount new battery holder first and attach new lithium storage battery next.

Note 1:
GC基板のリチウム蓄電池（BT2001）を交換する場合はバッテリホルダ（BH2001）も同時に新品に交換して下さい。
（一度使用したバッテリホルダは再使用できません。）
部品取り付けの際は，先にバッテリホルダを取り付けてからリチウム蓄電池を装着して下さい。

Note 2: Refer to "Assembly-5: On installation of the GS-010 Board, adjust the position of the switch" when installing.

Note 2: 組立時は"Assembly-5: On installation of the GS-010 Board, adjust the position of the switch"を参照してください。

2-1-5. CABINET (L) SECTION-2

ns: not supplied

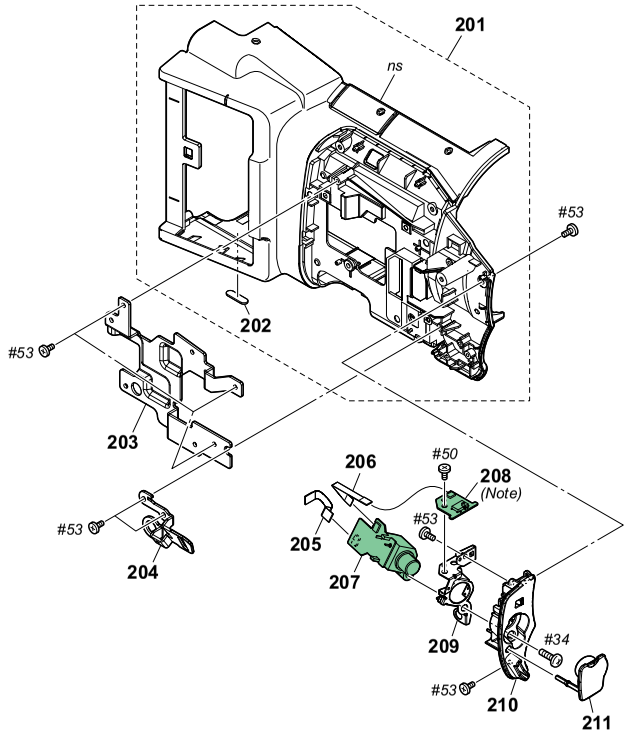

Ref. No.	Part No.	Description
201	X-2515-776-1	CABINET (L (94000)) ASSY (EXCEPT HXR-NX5M/HXR-NX5C)
201	X-2515-787-1	CABINET (L (94003)) ASSY (HXR-NX5M/HXR-NX5C)
202	2-178-805-01	FOOT, RUBBER
* 203	4-165-334-01	HEAT SINK, L
* 204	4-165-327-01	BRACKET (FRONT), GRIP BELT
205	1-837-240-11	CABLE, FLEXIBLE FLAT (FFC-194)
206	1-837-242-11	CABLE, FLEXIBLE FLAT (FFC-202)
207	A-1752-121-A	TC-001 BOARD, COMPLETE
208	A-1752-126-A	TS-157 BOARD, COMPLETE (Note)
209	4-165-237-01	FRAME, TC
210	X-2515-777-1	CABINET (TC) ASSY
211	4-165-240-01	COVER, TC
#34	3-077-331-41	+BV3 (3-CR)
#50	2-891-494-11	SCREW (M2), NEW TRUSTER, P2
#53	3-080-206-21	SCREW, TAPPING, P2

Screw

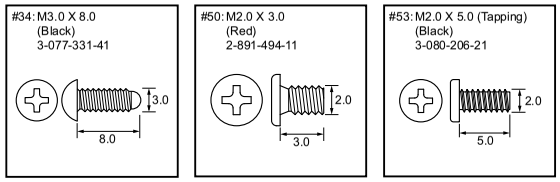

Note

Note : Refer to "Assembly-6: On installation of the TS-157 Board, adjust the position of the switch" when installing.

Note : 組立時は" - i - B us s を参照してください。

2-1-6. CABINET (R) SECTION

ns: not supplied

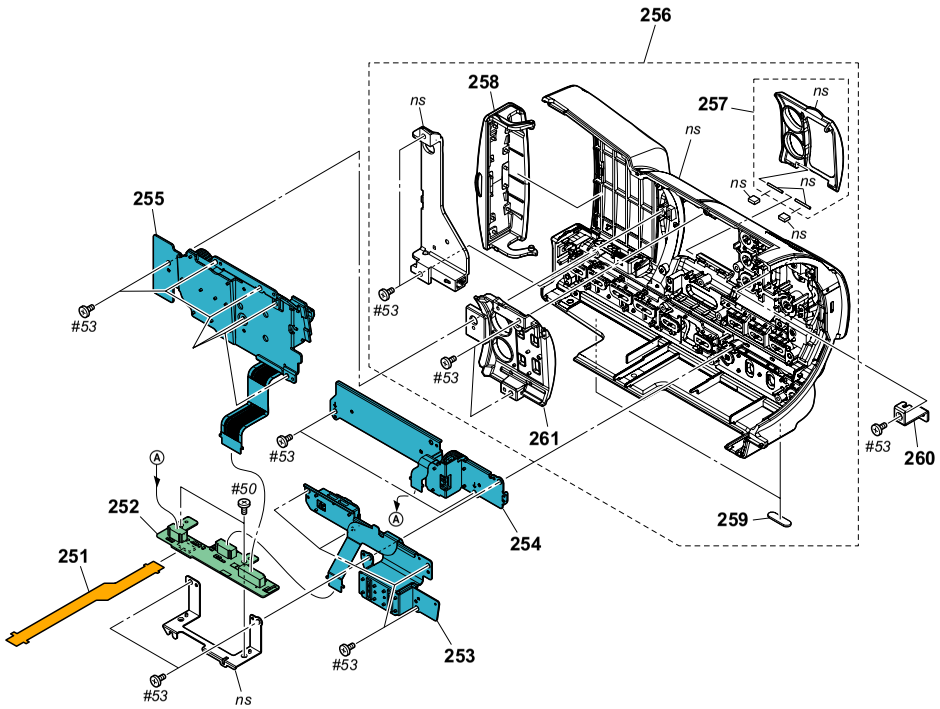

Ref. No.	Part No.	Description
251	1-879-858-11	FP-1159 FLEXIBLE BOARD
252	A-1752-112-A	CK-218 BOARD, COMPLETE
253	1-487-451-11	SWITCH BLOCK, CONTROL (CF94000)
254	1-487-449-11	SWITCH BLOCK, CONTROL (KP94000)
255	1-487-450-11	SWITCH BLOCK, CONTROL (AU94000)

Ref. No.	Part No.	Description
256	X-2515-775-1	CABINET (R (94000)) ASSY (EXCEPT HXR-NX5M/HXR-NX5C)
256	X-2515-786-1	CABINET (R (94003)) ASSY (HXR-NX5M/HXR-NX5C)
257	X-2546-696-1	LID SUB ASSY (94000), AL (SERVICE)
258	X-2546-465-1	LID SUB ASSY (94000), MS (SERVICE)
* 259	4-165-325-01	SHEET, RUBBER
* 260	4-119-383-01	PLATE, CABINET (R) FIXED
* 261	4-165-313-01	BASE, AL
#50	2-891-494-11	SCREW (M2), NEW TRUSTER, P2
#53	3-080-206-21	SCREW, TAPPING, P2

Screw

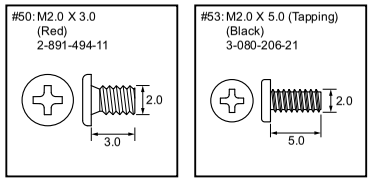

2-1-7. HANDLE SECTION-1

ns: not supplied

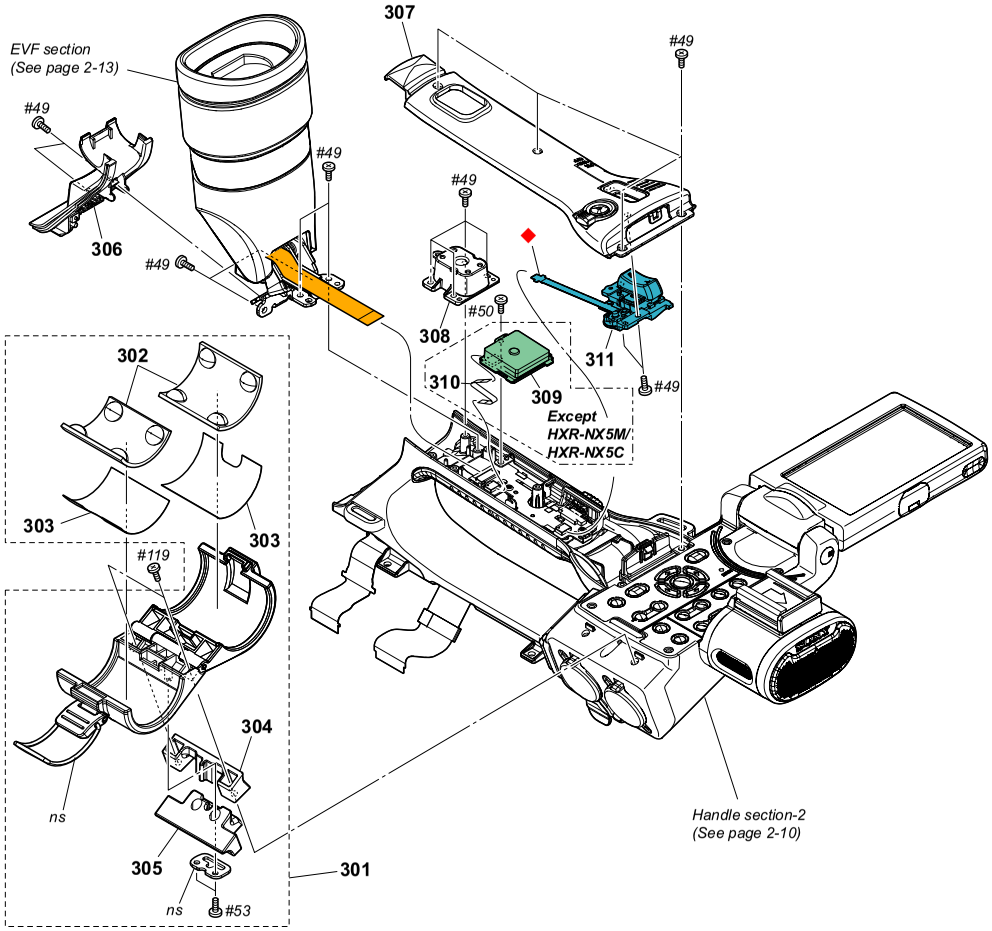

Ref. No.	Part No.	Description
301	X-2342-570-1	HOLDER (93000) ASSY, MICROPHONE
302	3-284-080-01	RUBBER, MICROPHONE
303	3-284-081-01	SHEET, RUBBER ADHESIVE
304	3-284-075-02	COVER, MICROPHONE HOLDER RUBBER
305	4-119-861-01	RUBBER (93000), HOLDER
306	X-2515-770-1	COVER (94000) ASSY, (REAR)
307	X-2515-769-1	CABINET (94000) ASSY, (UPPER)
308	3-288-538-01	SHOE, REAR (COLD)
309	A-1753-082-A	GP940 ASSY (EXCEPT HXR-NX5M/HXR-NX5C)
310	1-837-242-11	CABLE, FLEXIBLE FLAT (FFC-202) (EXCEPT HXR-NX5M/HXR-NX5C)
311	1-480-298-11	SWITCH BLOCK, CONTROL (GZ92000)
#49	2-630-005-31	SCREW (M2), NEW TRUSTER, P2
#50	2-891-494-11	SCREW (M2), NEW TRUSTER, P2
#53	3-080-206-21	SCREW, TAPPING, P2
#119	7-627-556-58	SCREW +P 2.6X5

DISASSEMBLY

1. The meaning of the sign in left figure is as follows. Be careful when it removes.
   ◆-X: Flexible Board, Flat Cable, Harness

Screw

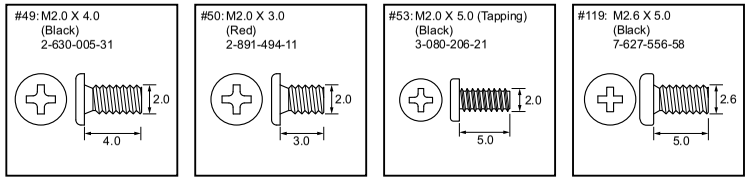

2-1-8. HANDLE SECTION-2

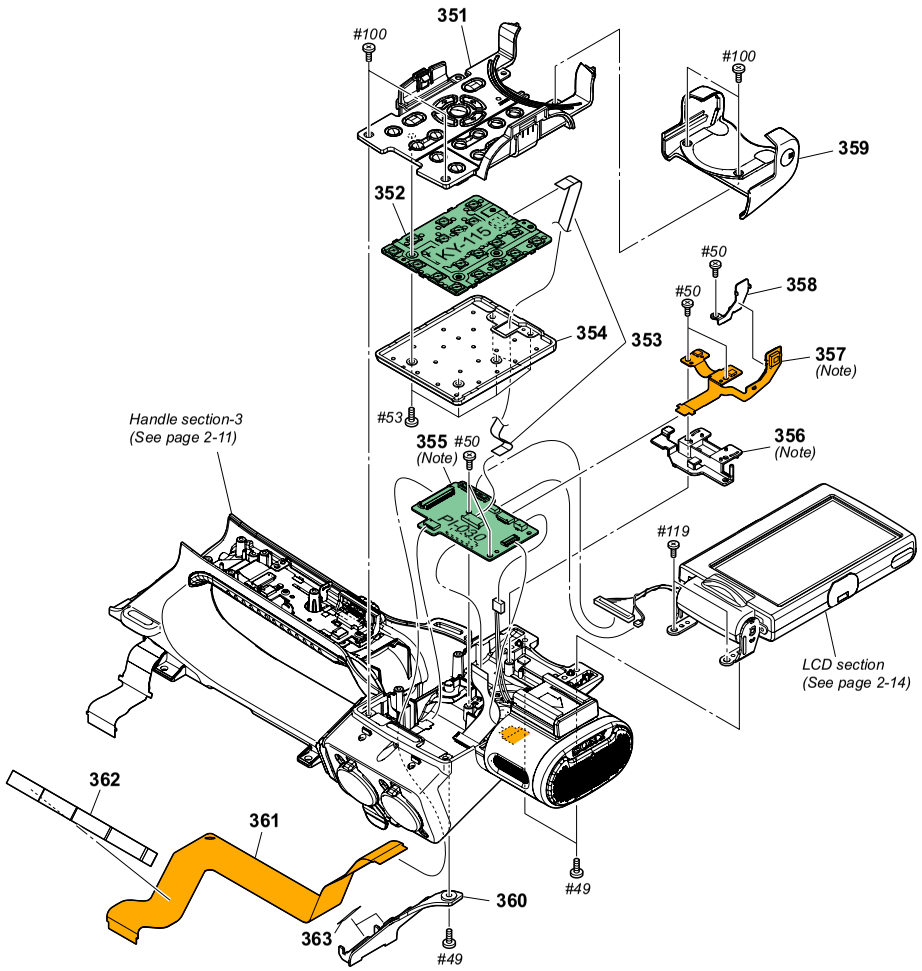

Ref. No.	Part No.	Description
351	X-2515-767-1	PANEL (94000) ASSY, CONTROL
352	A-1752-116-A	KY-115 BOARD, COMPLETE
353	1-837-240-11	CABLE, FLEXIBLE FLAT (FFC-194)
* 354	4-165-283-01	COVER (BB)
355	A-1752-129-A	PI-030 BOARD, COMPLETE (Note)
356	4-119-279-01	HOLDER, FLEXIBLE (Note)
357	A-1752-134-A	FP-1150 FLEXIBLE BOARD, COMPLETE (Note)
358	X-2188-609-1	FIXED (759) ASSY
359	X-2515-768-1	COVER (94000) ASSY, (FRONT)
360	4-165-281-01	CABINET, HANDLE (FRONT)
361	1-879-856-12	FP-1157 FLEXIBLE BOARD
362	4-169-934-01	SHEET (FP1157), COUNTERMEASURE
* 363	4-174-174-01	CUSHION, HANDLE (FRONT) CABINET
#49	2-630-005-31	SCREW (M2), NEW TRUSTER, P2
#50	2-891-494-11	SCREW (M2), NEW TRUSTER, P2
#53	3-080-206-21	SCREW, TAPPING, P2
#100	3-080-203-51	SREW (M2), LOCK ACE, P2
#119	7-627-556-58	SCREW +P 2.6X5

Screw

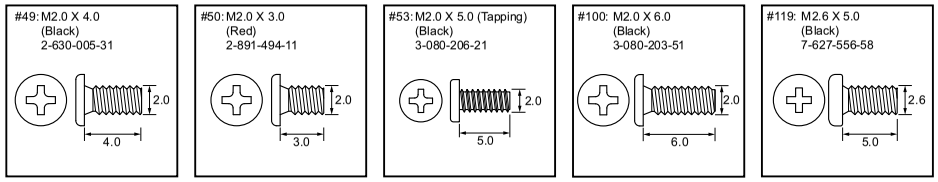

Note

Note : Refer to "Assembly-4: How to arrange Harnesses and Flexible Board" when installing.

Note : 組立時は"　　How
F　　を参照してください。

2-1-9. HANDLE SECTION-3

ns: not supplied

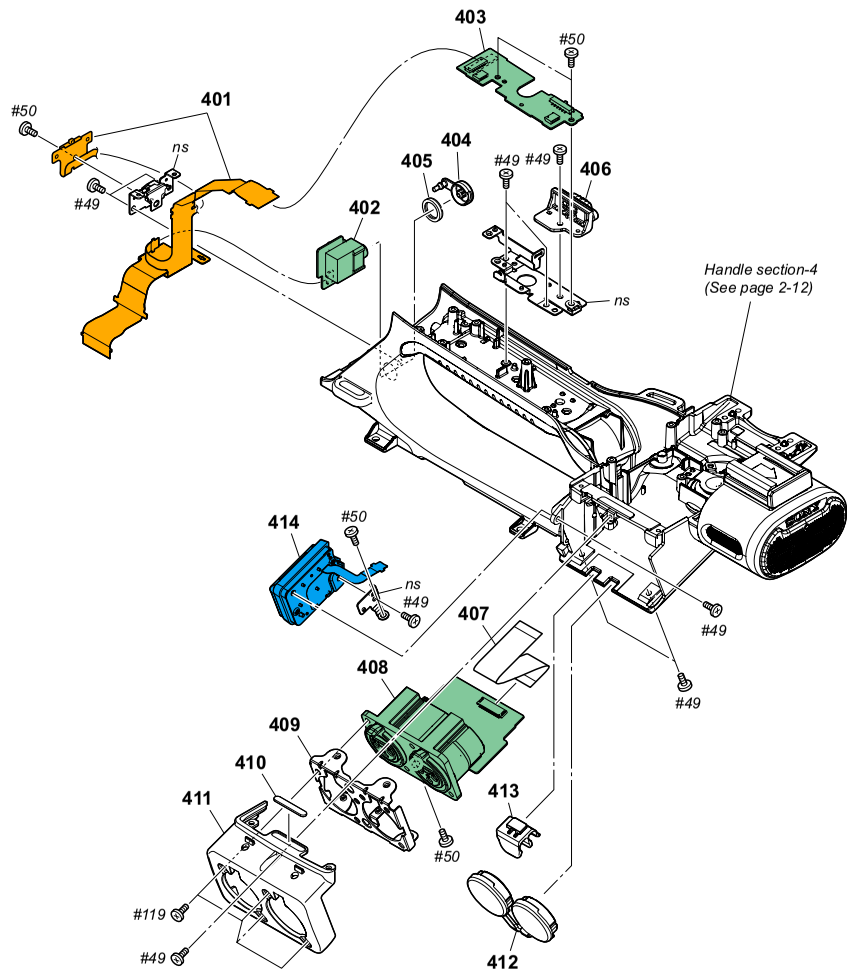

Ref. No.	Part No.	Description
401	A-1752-136-A	FP-1152 FLEXIBLE BOARD, COMPLETE
402	A-1752-114-A	HP-156 BOARD, COMPLETE
403	A-1752-123-A	HG-001 BOARD, COMPLETE
404	4-165-284-01	COVER, HP JACK
405	3-061-234-01	NUT (M6X0.5)
406	X-2188-599-1	KNOB ASSY, ZOOM SELECTION
407	1-834-244-11	FLEXIBLE FLAT CABLE (FFC-116)
408	A-1752-130-A	XL-011 BOARD, COMPLETE
* 409	4-165-279-01	BRACKET, XL
410	3-288-474-01	RUBBER, PANEL RETAINER
411	4-165-282-01	COVER, XLR
412	4-165-285-01	COVER, XLR RUBBER
413	2-892-095-01	CLAMP, CABLE
414	1-480-870-11	SWITCH BLOCK, CONTROL (XS93000)
#49	2-630-005-31	SCREW (M2), NEW TRUSTER, P2
#50	2-891-494-11	SCREW (M2), NEW TRUSTER, P2
#119	7-627-556-58	SCREW +P 2.6X5

Screw

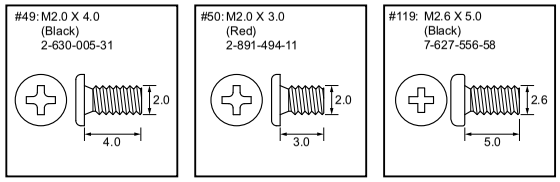

2-1-10. HANDLE SECTION-4

ns: not supplied

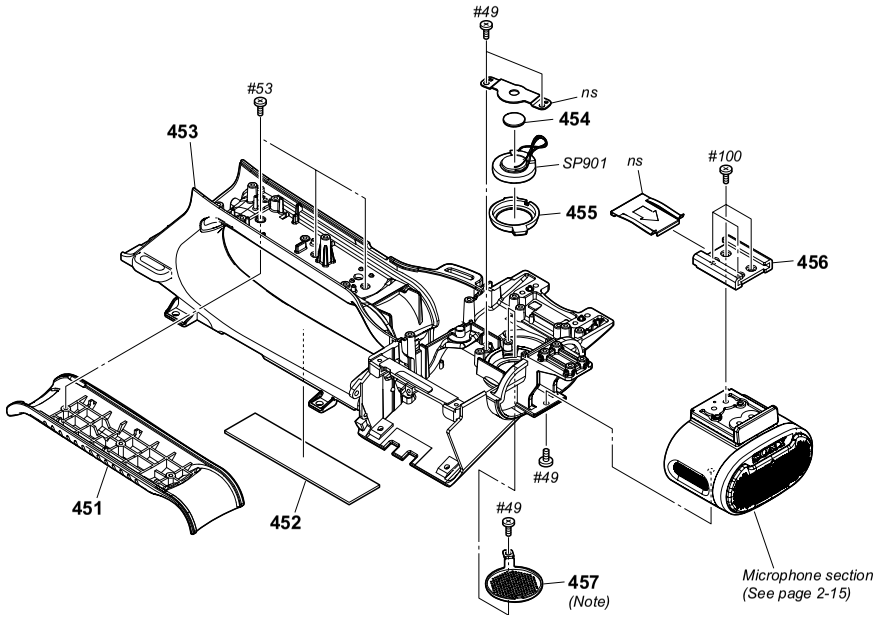

Ref. No.	Part No.	Description
451	4-165-278-01	GRIP
452	4-165-224-01	SHEET (6018T1), RADIATION
453	4-165-277-01	HANDLE
* 454	4-119-285-01	CUSHION, SPEAKER
455	2-178-550-01	HOLDER, SPEAKER
456	3-069-286-03	SHOE, ACCESSORY
* 457	2-178-566-01	GRILLE, SPEAKER (Note)
SP901	1-825-968-11	LOUDSPEAKER (1.8CM)
#49	2-630-005-31	SCREW (M2), NEW TRUSTER, P2
#53	3-080-206-21	SCREW, TAPPING, P2
#100	3-080-203-51	SREW (M2), LOCK ACE, P2

Screw

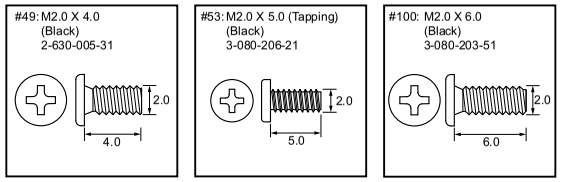

Note

Note: Refer to "Assembly-3: How to bent the Speaker Grille" when installing.

Note: 組立時は" How を参照してください。

2-1-11. EVF SECTION

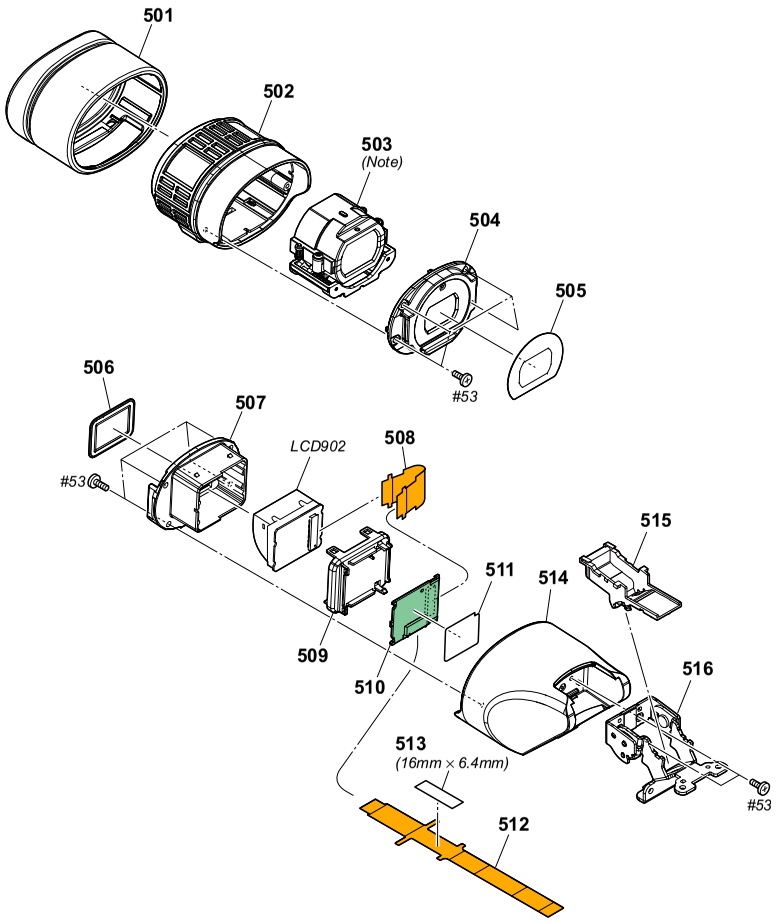

Ref. No.	Part No.	Description
501	4-119-301-01	EYE CUP (SMALL)
502	X-2320-885-1	EYE CUP (93000) ASSY
503	X-2320-861-1	LENS ASSY, VF (Note)
504	4-119-302-01	LID, EYE CUP CABINET
505	4-119-303-01	COVER, EYE CUP CABINET LID
506	3-288-591-01	SHEET, VF PROTECTION
507	3-288-585-01	CASE, PANEL
508	1-873-733-11	FP-776 FLEXIBLE BOARD
509	3-288-586-01	LID, PANEL
510	A-1752-131-A	VF-179 BOARD, COMPLETE
* 511	3-299-948-01	SHEET (UU)
512	1-879-859-11	FP-1160 FLEXIBLE BOARD
513	CAUTION	TAPE, VF
514	X-2515-771-1	CABINET (94000) ASSY, VF
* 515	4-165-332-01	RETAINER, VF FLEXIBLE
516	X-2515-764-1	TILT ASSY, VF
LCD902	1-802-560-31	LCD MODULE
#53	3-080-206-21	SCREW, TAPPING, P2

Screw

#53: M2.0 X 5.0 (Tapping)
(Black)
3-080-206-21

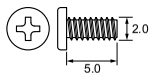

Note

Caution :
For the part of 513, cut NON WOVEN (T0.25) (3-076-631-01) into the desired length and use it.

Caution:
５１３番は，ヒメロン を切って使用。

Note: Refer to "Assembly-1: Confirm the Diopter Adjustment Lever is on the left side when installing the VF Lens Assy" when installing.

Note: 組立時は" Conf t us L
/&を参照してください。

2-1-12. LCD SECTION

ns: not supplied

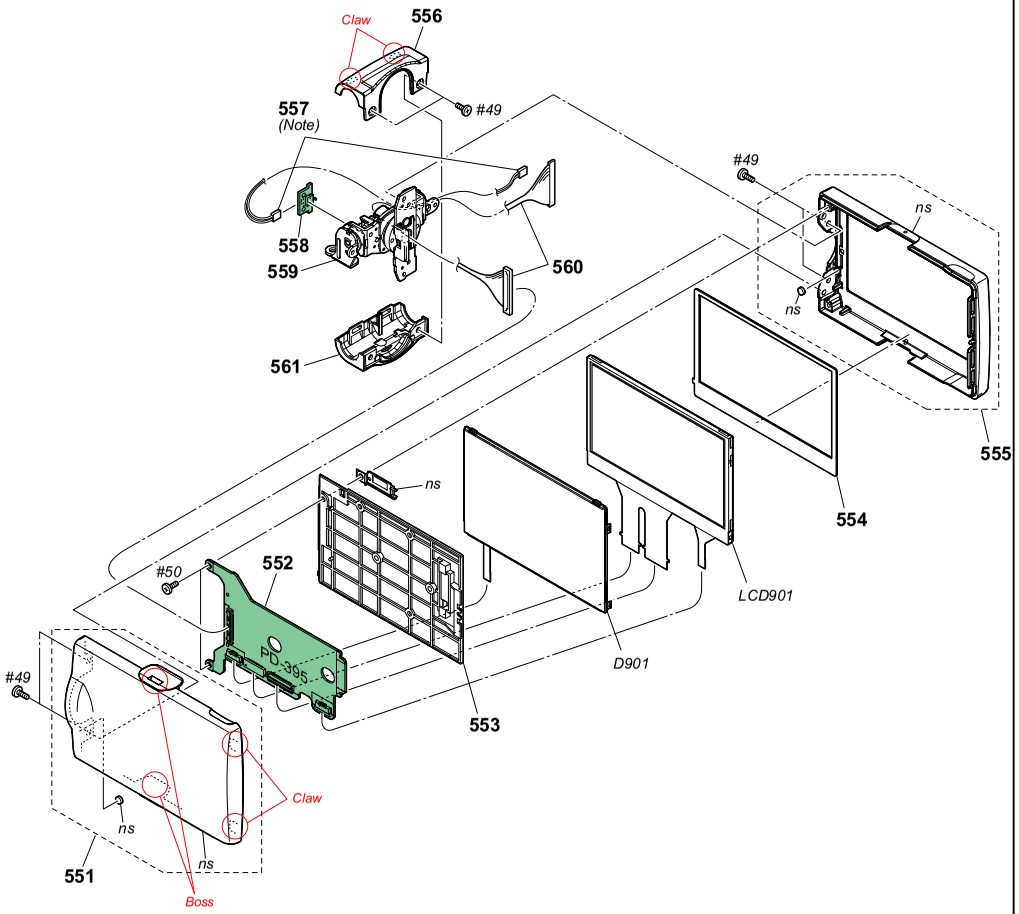

Ref. No.	Part No.	Description
551	X-2515-773-1	CABINET (UPPER (94000)) ASSY
552	A-1752-128-A	PD-395 BOARD, COMPLETE
* 553	4-165-311-01	FRAME, BL
554	3-288-565-11	CUSHION, PANEL
555	X-2515-774-1	LOWER (94000) ASSY, CABINET
556	3-288-566-01	CABINET (T), PANEL HINGE
557	1-963-030-21	HARNESS (SW-116) (Note)
558	A-1752-122-A	HT-003 BOARD, COMPLETE
559	X-2342-571-1	HINGE (TYPE 07KAI) ASSY, PANEL
560	1-965-937-21	HARNESS (COAXIAL CABLE)

Ref. No.	Part No.	Description
561	3-288-567-01	CABINET (B), PANEL HINGE
D901	1-480-358-11	BLOCK, LIGHT GUIDE PLATE (3.2)
LCD901	A-1734-177-A	TP BLOCK ASSY (32ESHGU09)
#49	2-630-005-31	SCREW (M2), NEW TRUSTER, P2
#50	2-891-494-11	SCREW (M2), NEW TRUSTER, P2

DISASSEMBLY

1. ○ points in left figure shows claws. Be careful when it removes.

Screw

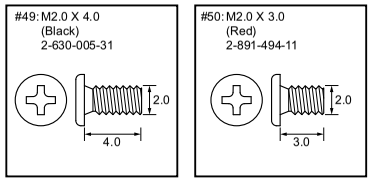

Note

Note: Refer to "Assembly-2: How to arrange Harnesses (SW-116)" when installing.

Note: 組立時は"
(を参照してください。

2-1-13. MICROPHONE SECTION

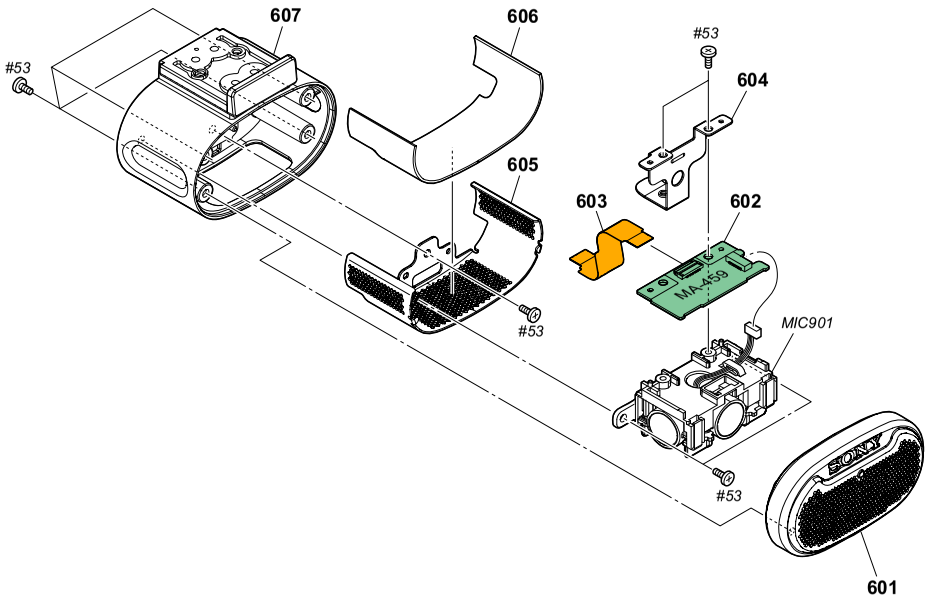

Ref. No.	Part No.	Description
601	X-2515-772-1	GRILLE (94000) ASSY, MICROPHONE
602	A-1752-117-A	MA-459 BOARD, COMPLETE
603	1-879-857-11	FP-1158 FLEXIBLE BOARD
* 604	4-165-302-01	SHEET METAL, MICROPHONE
605	4-165-303-01	GRILLE (REAR), MICROPHONE
606	4-165-304-01	SCREEN (REAR), WINDOW
607	4-165-301-01	CABINET (REAR), MICROPHONE
MIC901	1-542-808-11	MICROPHONE
#53	3-080-206-21	SCREW, TAPPING, P2

Screw

#53: M2.0 X 5.0 (Tapping)
(Black)
3-080-206-21

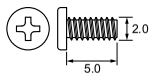

2-1-14. LENS SECTION

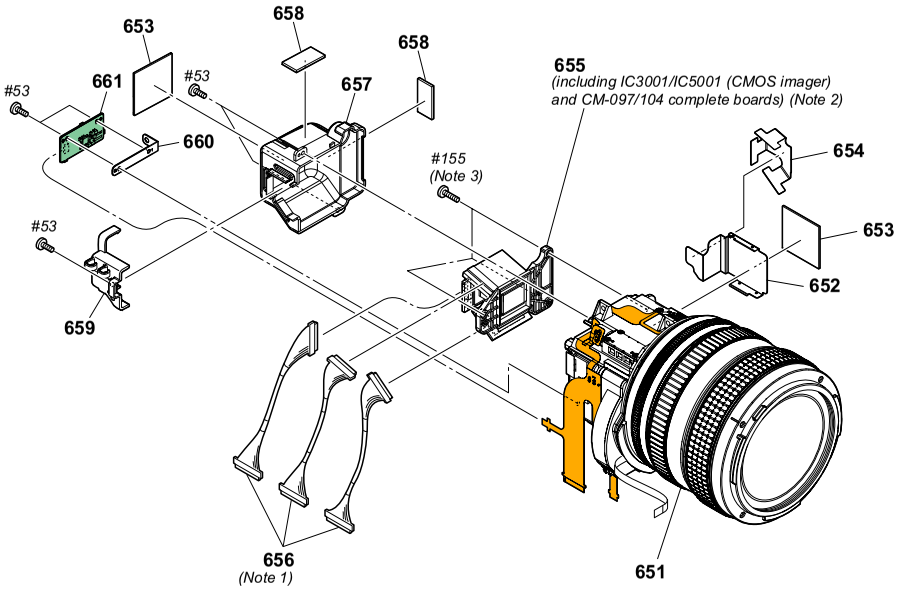

Ref. No.	Part No.	Description
651	1-788-775-31	LENS, VIDEO CF0022
* 652	4-119-361-01	HEAT SINK, LENS
653	4-119-362-01	SHEET (2828), LENS RADIATION
* 654	4-119-360-01	SHEET, CM RADIATION
655	A-1566-526-A	DEVICE (SERVICE), PRISM (including IC3001/IC5001 (CMOS imager) and CM-097/104 complete boards) (Note 2)
656	1-966-281-11	HARNESS (COAXIAL CABLE) (Note 1)
* 657	4-119-357-01	COVER (A), LIGHT INTERCEPTION
658	4-119-356-01	SHEET (1122), LENS RADIATION
* 659	4-119-358-01	COVER (B), LIGHT INTERCEPTION
* 660	4-119-359-01	PLATE, GY GROUND
661	A-1759-066-A	GY-022 BOARD, COMPLETE (SERVICE)
#53	3-080-206-21	SCREW, TAPPING, P2
#155	3-080-204-31	SCREW, TAPPING, P2 (Note 3)

Screw

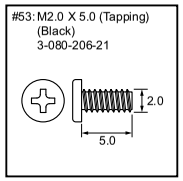

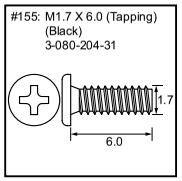

Note

Note1: Refer to page 2-2 “Note for disconnecting the harness (coaxial cable)” when changing the harness (coaxial cable).

Note2: Be sure to read “Precuations for Replacement of Imager”on page 6-1 when changing the imager.

Note1: ハーネス（同軸ケーブル）の交換時は2- ページの“ f c を参照してください。

Note2: イメージャの交換時は6- ページの“イメージャ交換時の注意を必ずお読みください。

Note 3: Prism Device cautions

Tighten screws in the following order.

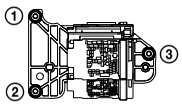

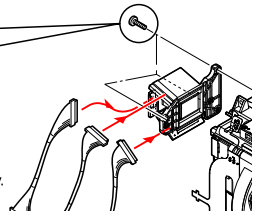

Be sure not to insert the harnesses forcefully.
(Standard: Insertion; 15N, Pull out; 10N)

Note 3: プリズムデバイス取り外し組立時の注意

下記の順番でねじを締め付けてください。

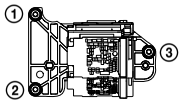

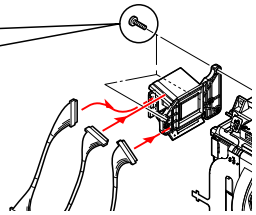

ハーネスを強く差し込まないでください。
（差し込み時：１５Ｎ　引き抜き時：１０Ｎ）

2-1-15. BT PANEL SECTION

ns: not supplied

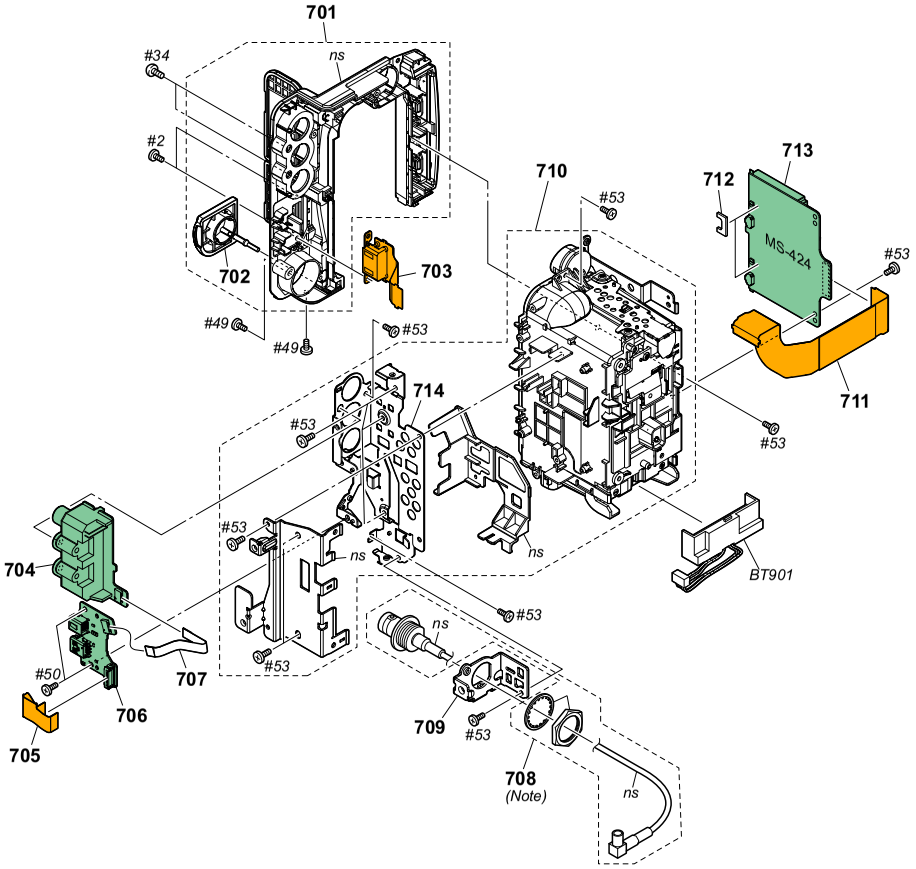

Ref. No.	Part No.	Description
701	X-2515-765-1	PANEL (94000) ASSY, BT
702	4-165-234-01	COVER, SDI JACK
703	A-1752-133-A	FP-1149 FLEXIBLE BOARD, COMPLETE
704	A-1752-099-A	CP-004 BOARD, COMPLETE
705	1-879-883-11	FP-1162 FLEXIBLE BOARD
706	A-1752-115-A	JK-392 BOARD, COMPLETE
707	1-837-240-11	CABLE, FLEXIBLE FLAT (FFC-194)
708	1-836-909-11	CABLE ASSY, COAXIAL (Note)
* 709	4-165-233-01	HOLDER, SDI
710	X-2515-780-1	HOLDER ASSY, BT

Ref. No.	Part No.	Description
711	1-879-854-11	FP-1155 FLEXIBLE BOARD
712	4-165-226-01	SHEET, MS LIGHT INTERCEPTION
713	A-1752-120-A	MS-424 BOARD, COMPLETE
714	4-165-269-01	HOLDER, JACK
⚠ BT901	1-694-411-12	TERMINAL BOARD, BATTERY
#2	2-635-562-31	SCREW (M1.7)
#34	3-077-331-41	+BV3 (3-CR)
#49	2-630-005-31	SCREW (M2), NEW TRUSTER, P2
#50	2-891-494-11	SCREW (M2), NEW TRUSTER, P2
#53	3-080-206-21	SCREW, TAPPING, P2

Screw

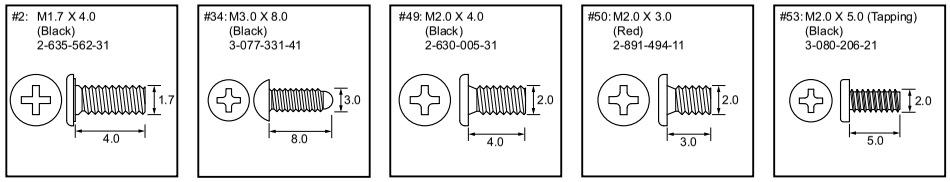

Note

Note: Connect and Disconnect the SDI Cable vertically.
Do not load to widthwise.

Note: 同軸ケーブルは垂直に抜き差ししてください。
横方向に力を加えないようにしてください。

Ver. 1.2 2010.06
The changed portions from
Ver. 1.1 are shown in blue.

• EXCEPT J MODEL

Checking supplied accessories.

Note : This item is supplied with the unit as an accessory, but is not prepared as a service part.

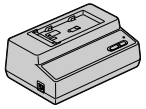

AC Adaptor/Charger
(AC-VL1)
⚠ 1-487-539-11

Power cord (mains lead)
⚠ 1-834-484-31 (NX5U)
⚠ 1-832-121-31 (NX5C)
⚠ 1-834-482-21 (NX5N/NX5E/NX5M/NX5P)

Connecting Cord (DK-415)
1-782-361-21

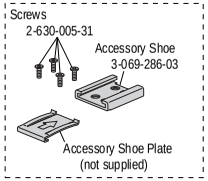

Accessory Shoe Kit
X-2188-877-2

Wireless Remote Commander
(RMT-845)
1-487-540-11

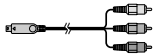

Component video cable
1-829-414-61

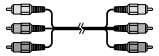

A/V connecting cable
1-828-145-21

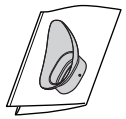

Large eyecup
X-2342-702-1

Rechargeable battery pack
(NP-F770) (NX5U)
(Note)

Rechargeable battery pack
(NP-F570)
(EXCEPT NX5U)
(Note)

Conversion (2P) Adaptor
⚠ 1-569-008-12 (NX5N)

Operating Guide
4-157-877-11 (ENGLISH) (NX5U/NX5N)
4-157-878-11 (ENGLISH) (NX5E/NX5P/NX5M)
4-157-878-21 (SIMPLIFIED CHINESE) (NX5C)

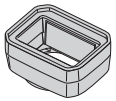

Lens hood with lens cover
(CF002)
X-2320-850-1

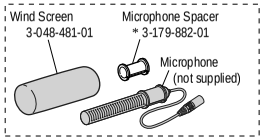

Wind Screen, Microphone
(ECM-XM1)
1-542-749-12

USB cable
1-829-868-31

CD-ROM
Content Management
Utility
4-174-940-03

CD-ROM Manuals for
Digital HD Video
Camera Recorder
4-162-320-01

Operating Guide (PDF)

The CD-ROM supplied contains all of language version of the Operating Instructions(PDF) for printing.
- The printed matter is not supplied. If required, please order it with the part number below.

4-157-877-01 (JAPANESE)
4-157-877-11 (ENGLISH)
* 4-157-877-21 (FRENCH)

4-157-878-11 (ENGLISH)
4-157-878-21 (SIMPLIFIED CHINESE)
* 4-157-878-31 (FRENCH)
* 4-157-878-41 (SPANISH)
* 4-157-878-51 (ITALIAN)
* 4-157-878-61 (GERMAN)

• J MODEL

ワイヤレスリモコン
(RMT-845)
1-487-540-11

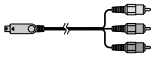

コンポーネントビデオケーブル
1-829-414-61

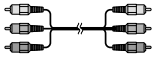

A/V接続ケーブル
1-828-145-21

接続コード
(DK-415)
1-782-361-21

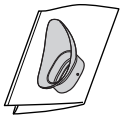

大型アイカップ
X-2342-702-1

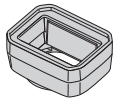

レンズカバー付きフード
(CF002)
X-2320-850-1

USBケーブル
1-829-868-31

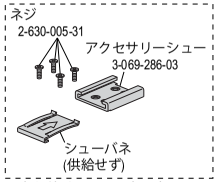

アクセサリーシューキット
X-2188-877-2

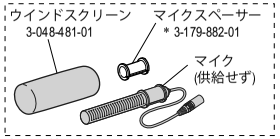

ウインドスクリーン，マイク
(ECM-XM1)
1-542-749-12

取扱説明書
4-157-877-01 (日本語)

CD-ROM
「"Content Management
Utility"」
4-174-940-03

CD-ROM
「Manuals for Digital HD
Video Camera Recorder」
4-162-320-01

取扱説明書 (PDF)

取扱説明書(PDF)は全ての言語が付属品のCD-ROMに含まれています。
CD-ROM内の取扱説明書(PDF)につきましては印刷しての供給は対応しておりません。

(ENGLISH)

NOTE:

- -XX, -X mean standardized parts, so they may have some differences from the original one.
- Items marked "*" are not stocked since they are seldom required for routine service. Some delay should be anticipated when ordering these items.
- The mechanical parts with no reference number in the exploded views are not supplied.
- Due to standardization, replacements in the parts list may be different from the parts specified in the diagrams or the components used on the set.
- CAPACITORS:
  uF: μF
- COILS
  uH: μH
- RESISTORS
  All resistors are in ohms.
  METAL: metal-film resistor
  METAL OXIDE: Metal Oxide-film resistor
  F: nonflammable
- SEMICONDUCTORS
  In each case, u: μ, for example:
  uA...: μA... , uPA... , μPA... ,
  uPB... , μPB... , uPC... , μPC... ,
  uPD..., μPD...

When indicating parts by reference number, please include the board name.

The components identified by mark ⚠ or dotted line with mark ⚠ are critical for safety.
Replace only with part number specified.

Les composants identifiés par une marque ⚠ sont critiques pour la sécurité.
Ne les remplacer que par une pièce portant le numéro spécifié.

Caution
Danger of explosion if battery is incorrectly replaced.
Replace only with the same or equivalent type.
Dispose of used batteries according to the instructions.

Note: Replace the battery holder (BH2001) together when replacing the lithium storage battery (BT2001) on the GC-012 board. (The battery holder removed once cannot be used again.) When mounting these parts, mount new battery holder first and attach new lithium storage battery next.

(JAPANESE)

【使用上の注意】

- ここに記載されている部品は，補修用部品であるため，回路図及びセットに付いている部品と異なる場合があります。
- は標準化部品のためセットに付いている部品と異なる場合があります。
- 印の部品は常備在庫しておりません。
- コンデンサの単位では μを示します。
- 抵抗の単位Ωは省略してあります。
  金　被：金属被膜抵抗。
  サンキン：酸化金属被膜抵抗。
- インダクタの単位では μHを示します。
- 半導体の名称でuA uP uP uP等はそれぞれ μA μP μP μP μPを示します。

お願い
図面番号で部品を指定するときは基板名又はブロックを併せて指定してください。

⚠印の部品，または⚠印付の点線で囲まれた部品は，安全性を維持するために，重要な部品です。
従って交換時は，必ず指定の部品を使用してください。

Caution
電池の交換は，正しく行わないと破裂する恐れがあります。
電池を交換する場合には必ず同じ型名の電池又は同等品と交換してください。
使用済み電池は，取扱指示に従って処分してください。

ノート:
G 基板のリチウム蓄電池(B)を交換する場合はバッテリホルダ(B)も同時に新品に交換して下さい。
(一度使用したバッテリホルダは再使用できません。)
部品取り付けの際は，先にバッテリホルダを取り付けてからリチウム蓄電池を装着して下さい。

2-1. ELECTRICAL PARTS LIST

Ref. No.	Part No.	Description			
	A-1752-127-A	AS-063 BOARD, COMPLETE **********			
		< CAPACITOR >			
C1501	1-125-777-11	CERAMIC CHIP	0.1uF	10%	10V
C1502	1-125-777-11	CERAMIC CHIP	0.1uF	10%	10V
C1503	1-125-777-11	CERAMIC CHIP	0.1uF	10%	10V
C1504	1-125-777-11	CERAMIC CHIP	0.1uF	10%	10V
C1505	1-165-908-11	CERAMIC CHIP	1uF	10%	10V
C1506	1-165-884-11	CERAMIC CHIP	2.2uF	10%	6.3V
C1507	1-125-777-11	CERAMIC CHIP	0.1uF	10%	10V
C1508	1-125-777-11	CERAMIC CHIP	0.1uF	10%	10V
C1509	1-165-989-11	CERAMIC CHIP	10uF	10%	6.3V
C1510	1-165-989-11	CERAMIC CHIP	10uF	10%	6.3V
C1511	1-125-777-11	CERAMIC CHIP	0.1uF	10%	10V
C1512	1-164-850-11	CERAMIC CHIP	10PF	0.5PF	50V
C1513	1-164-850-11	CERAMIC CHIP	10PF	0.5PF	50V
C1514	1-100-567-81	CERAMIC CHIP	0.01uF	10%	25V
C1515	1-100-567-81	CERAMIC CHIP	0.01uF	10%	25V
C1516	1-100-567-81	CERAMIC CHIP	0.01uF	10%	25V
C1517	1-100-567-81	CERAMIC CHIP	0.01uF	10%	25V
C1518	1-165-908-11	CERAMIC CHIP	1uF	10%	10V
C1519	1-165-908-11	CERAMIC CHIP	1uF	10%	10V
C1520	1-125-777-11	CERAMIC CHIP	0.1uF	10%	10V
C1521	1-165-884-11	CERAMIC CHIP	2.2uF	10%	6.3V
C1526	1-125-777-11	CERAMIC CHIP	0.1uF	10%	10V
C1527	1-125-777-11	CERAMIC CHIP	0.1uF	10%	10V
C1528	1-165-908-11	CERAMIC CHIP	1uF	10%	10V
		< CONNECTOR >			
CN1501	1-817-920-11	CONNECTOR, FPC (ZIF) 80P			
CN1502	1-816-654-61	FFC/FPC CONNECTOR (LIF) 6P			
CN1503	1-816-645-61	FFC/FPC CONNECTOR (LIF) 14P			
		< FERRITE BEAD >			
* FB1501	1-481-300-11	INDUCTOR, FERRITE BEAD			
* FB1502	1-481-300-11	INDUCTOR, FERRITE BEAD			
FB1503	1-400-354-11	INDUCTOR, FERRITE BEAD (1005)			
FB1504	1-400-354-11	INDUCTOR, FERRITE BEAD (1005)			
FB1505	1-400-354-11	INDUCTOR, FERRITE BEAD (1005)			
FB1506	1-400-354-11	INDUCTOR, FERRITE BEAD (1005)			
FB1507	1-400-354-11	INDUCTOR, FERRITE BEAD (1005)			
		< FILTER >			
FL1501	1-234-939-21	FILTER, EMI REMOVAL (SMD)			
FL1502	1-234-939-21	FILTER, EMI REMOVAL (SMD)			
		< IC >			
IC1501	6-713-638-01	IC BU19502KV-E2			
IC1502	6-703-977-01	IC R1114Q331D-TR-FA			
* IC1503	6-714-696-01	IC MAX8586ETA+T			
		< FILTER >			
LF1501	1-457-374-21	COMMOM MODE CHOKE COIL			
		< RESISTOR >			
R1501	1-218-940-11	METAL CHIP	82	5%	1/16W
R1502	1-218-940-11	METAL CHIP	82	5%	1/16W
R1503	1-218-940-11	METAL CHIP	82	5%	1/16W
R1504	1-218-940-11	METAL CHIP	82	5%	1/16W
R1505	1-218-940-11	METAL CHIP	82	5%	1/16W
R1506	1-218-933-11	METAL CHIP	22	5%	1/16W
R1507	1-218-940-11	METAL CHIP	82	5%	1/16W
R1508	1-218-933-11	METAL CHIP	22	5%	1/16W
R1509	1-218-940-11	METAL CHIP	82	5%	1/16W
R1510	1-218-940-11	METAL CHIP	82	5%	1/16W
R1511	1-218-933-11	METAL CHIP	22	5%	1/16W
R1512	1-218-935-11	METAL CHIP	33	5%	1/16W
R1513	1-218-935-11	METAL CHIP	33	5%	1/16W
R1514	1-218-935-11	METAL CHIP	33	5%	1/16W
R1515	1-218-935-11	METAL CHIP	33	5%	1/16W
R1516	1-218-935-11	METAL CHIP	33	5%	1/16W
R1517	1-218-935-11	METAL CHIP	33	5%	1/16W
R1518	1-218-935-11	METAL CHIP	33	5%	1/16W
R1519	1-218-935-11	METAL CHIP	33	5%	1/16W
R1520	1-218-935-11	METAL CHIP	33	5%	1/16W
R1521	1-218-935-11	METAL CHIP	33	5%	1/16W
R1522	1-218-935-11	METAL CHIP	33	5%	1/16W
R1523	1-218-935-11	METAL CHIP	33	5%	1/16W
R1524	1-218-935-11	METAL CHIP	33	5%	1/16W
R1525	1-218-935-11	METAL CHIP	33	5%	1/16W
R1526	1-218-935-11	METAL CHIP	33	5%	1/16W
R1527	1-218-935-11	METAL CHIP	33	5%	1/16W
R1528	1-218-953-11	METAL CHIP	1K	5%	1/16W
R1532	1-216-833-11	METAL CHIP	10K	5%	1/10W
R1533	1-208-911-11	METAL CHIP	10K	0.5%	1/16W
R1534	1-208-890-11	METAL CHIP	1.3K	0.5%	1/16W
R1535	1-218-989-11	METAL CHIP	1M	5%	1/16W
R1536	1-218-977-11	METAL CHIP	100K	5%	1/16W
R1545	1-208-721-11	METAL CHIP	39K	0.5%	1/16W
R1546	1-218-953-11	METAL CHIP	1K	5%	1/16W
R1549	1-218-990-81	SHORT CHIP	0		
R1551	1-216-864-11	SHORT CHIP	0		
		< VIBRATOR >			
X1501	1-813-210-11	VIBRATOR, CRYSTAL (NX5032GA) (25MHz)			

Ref. No.	Part No.	Description			
	A-1752-112-A	CK-218 BOARD, COMPLETE **********			
		< CONNECTOR >			
* CN1001	1-779-335-51	CONNECTOR, FFC/FPC 22P			
* CN1002	1-779-331-51	CONNECTOR, FFC/FPC 14P			
CN1003	1-779-330-51	CONNECTOR, FFC/FPC 12P			
* CN1004	1-817-560-71	CONNECTOR, FPC (ZIP) 21P			
		< RESISTOR >			
R1001	1-218-970-11	METAL CHIP	27K	5%	1/16W
R1002	1-218-970-11	METAL CHIP	27K	5%	1/16W
R1003	1-218-970-11	METAL CHIP	27K	5%	1/16W
R1004	1-218-954-11	METAL CHIP	1.2K	5%	1/16W
R1005	1-218-964-11	METAL CHIP	8.2K	5%	1/16W
R1006	1-218-964-11	METAL CHIP	8.2K	5%	1/16W
R1007	1-218-964-11	METAL CHIP	8.2K	5%	1/16W
R1008	1-218-960-11	METAL CHIP	3.9K	5%	1/16W

Ref. No.	Part No.	Description			
R1009	1-218-960-11	METAL CHIP	3.9K	5%	1/16W
R1010	1-218-960-11	METAL CHIP	3.9K	5%	1/16W
R1011	1-218-960-11	METAL CHIP	3.9K	5%	1/16W
R1012	1-218-957-11	METAL CHIP	2.2K	5%	1/16W
R1013	1-218-957-11	METAL CHIP	2.2K	5%	1/16W
R1014	1-218-957-11	METAL CHIP	2.2K	5%	1/16W
R1015	1-218-957-11	METAL CHIP	2.2K	5%	1/16W
R1016	1-218-955-11	METAL CHIP	1.5K	5%	1/16W
R1017	1-218-955-11	METAL CHIP	1.5K	5%	1/16W
R1018	1-218-955-11	METAL CHIP	1.5K	5%	1/16W
R1019	1-218-955-11	METAL CHIP	1.5K	5%	1/16W
R1020	1-218-954-11	METAL CHIP	1.2K	5%	1/16W
R1021	1-218-954-11	METAL CHIP	1.2K	5%	1/16W
R1022	1-218-954-11	METAL CHIP	1.2K	5%	1/16W
R1023	1-218-954-11	METAL CHIP	1.2K	5%	1/16W
		< VARISTOR >			
* VDR112	1-802-279-11	VARISTOR (SMD)			
* VDR113	1-802-279-11	VARISTOR (SMD)			

A-1752-099-A CP-004 BOARD, COMPLETE
****

		< CAPACITOR >			
C1503	1-164-935-11	CERAMIC CHIP	470PF	10%	50V
C1504	1-164-935-11	CERAMIC CHIP	470PF	10%	50V
		< CONNECTOR >			
CN1501	1-816-655-61	CONNECTOR, FFC/FPC 8P			
		< FERRITE BEAD >			
FB1501	1-400-331-11	FERRITE, EMI (SMD) (1005)			
FB1502	1-400-331-11	FERRITE, EMI (SMD) (1005)			
		< JACK >			
J1501	1-780-836-11	TERMINAL BOARD			
		< RESISTOR >			
R1501	1-218-990-81	SHORT CHIP	0		
R1502	1-218-965-11	METAL CHIP	10K	5%	1/16W
R1503	1-218-973-11	METAL CHIP	47K	5%	1/16W
		< VARISTOR >			
* VDR152	1-802-080-11	VARISTOR (SMD)			

1-873-733-11 FP-776 FLEXIBLE BOARD
****

A-1752-133-A FP-1149 FLEXIBLE BOARD, COMPLETE
****

Ref. No.	Part No.	Description			
		< CONNECTOR >			
* CN102	1-819-696-21	CONNECTOR, HDMI			

A-1752-134-A FP-1150 FLEXIBLE BOARD, COMPLETE
****

		< CAPACITOR >			
C2001	1-127-760-11	CERAMIC CHIP	4.7uF	10%	6.3V
C2002	1-125-777-11	CERAMIC CHIP	0.1uF	10%	10V
C2003	1-125-777-11	CERAMIC CHIP	0.1uF	10%	10V
		< IC >			
IC2001	6-600-163-01	IC RS-770			
IC2002	6-600-513-11	IC TK60019CS8G0L			
IC2003	6-600-513-11	IC TK60019CS8G0L			
		< RESISTOR >			
R2001	1-216-805-11	METAL CHIP	47	5%	1/10W

A-1752-135-A FP-1151 FLEXIBLE BOARD, COMPLETE
****

(CN301 is not supplied, but this is included in FP-1151 Flexible board.)

		< CONNECTOR >			
CN301	(Not supplied)	CONNECTOR, MULTIPLE (SOCKET)			

(CN301 is supplied included in FP-1151 complete flexible board.)

A-1752-136-A FP-1152 FLEXIBLE BOARD, COMPLETE
****

		< RESISTOR >			
R401	1-218-954-11	METAL CHIP	1.2K	5%	1/16W
		< SWITCH >			
S401	1-771-487-11	SWITCH, SLIDE			

1-879-854-11 FP-1155 FLEXIBLE BOARD
****

1-879-855-11 FP-1156 FLEXIBLE BOARD
****

1-879-856-12 FP-1157 FLEXIBLE BOARD
****

1-879-857-11 FP-1158 FLEXIBLE BOARD
****

Ref. No.	Part No.	Description			
	1-879-858-11	FP-1159 FLEXIBLE BOARD			
		**********			

1-879-859-11 FP-1160 FLEXIBLE BOARD
****

1-879-860-11 FP-1161 FLEXIBLE BOARD
****

1-879-883-11 FP-1162 FLEXIBLE BOARD
****

A-1752-113-A GC-012 BOARD, COMPLETE
****

(BT2001 is not included in GC-012 complete board.)

		< BATTERY HOLDER >			
⚠BH2001	1-756-615-61	HOLDER, BATTERY (Note)			
		< BATTERY >			
⚠BT2001	1-756-134-12	BATTERY, STORAGE, LITHIUM (Note)			
		< CAPACITOR >			
C2001	1-164-939-11	CERAMIC CHIP	0.0022uF	10%	50V
C2002	1-165-989-11	CERAMIC CHIP	10uF	10%	6.3V
C2003	1-165-989-11	CERAMIC CHIP	10uF	10%	6.3V
C2004	1-100-581-81	CERAMIC CHIP	0.0047uF	10%	50V
C2005	1-164-935-11	CERAMIC CHIP	470PF	10%	50V
C2008	1-125-777-11	CERAMIC CHIP	0.1uF	10%	10V
C2009	1-165-989-11	CERAMIC CHIP	10uF	10%	6.3V
C2010	1-165-989-11	CERAMIC CHIP	10uF	10%	6.3V
C2012	1-100-581-81	CERAMIC CHIP	0.0047uF	10%	50V
C2013	1-165-989-11	CERAMIC CHIP	10uF	10%	6.3V
C2014	1-128-709-21	TANTAL. CHIP	68uF	20%	10V
C2015	1-125-777-11	CERAMIC CHIP	0.1uF	10%	10V
C2016	1-128-964-91	TANTAL. CHIP	100uF	20%	6.3V
C2017	1-128-964-91	TANTAL. CHIP	100uF	20%	6.3V
		< CONNECTOR >			
* CN2001	1-779-333-51	CONNECTOR, FFC/FPC 18P			
CN2002	1-779-328-51	CONNECTOR, FFC/FPC 8P			
* CN2004	1-779-329-51	CONNECTOR, FFC/FPC 10P			
* CN2005	1-779-327-51	CONNECTOR, FFC/FPC 6P			
		< DIODE >			
D2001	8-719-074-67	DIODE EDZFJ-TE61-5.6B			
D2002	8-719-083-91	DIODE EDZFJ-TE61-6.8B			
		< IC >			
IC2001	8-759-058-62	IC TC7S08FU (TE85R)			
IC2003	8-759-678-15	IC TLV2231CDBVR			
IC2004	8-759-369-73	IC NJM4556AM			
		< RESISTOR >			
R2006	1-208-905-11	METAL CHIP	5.6K	0.5%	1/16W
R2008	1-218-941-81	METAL CHIP	100	5%	1/16W
R2011	1-218-990-81	SHORT CHIP	0		
R2012	1-208-713-11	METAL CHIP	18K	0.5%	1/16W
R2013	1-208-911-11	METAL CHIP	10K	0.5%	1/16W
R2014	1-208-911-11	METAL CHIP	10K	0.5%	1/16W
R2015	1-208-935-11	METAL CHIP	100K	0.5%	1/16W
R2016	1-208-935-11	METAL CHIP	100K	0.5%	1/16W
R2017	1-218-955-11	METAL CHIP	1.5K	5%	1/16W
R2018	1-218-956-11	METAL CHIP	1.8K	5%	1/16W
R2019	1-218-944-11	METAL CHIP	180	5%	1/16W
R2020	1-218-944-11	METAL CHIP	180	5%	1/16W
R2023	1-218-963-11	METAL CHIP	6.8K	5%	1/16W
R2024	1-218-963-11	METAL CHIP	6.8K	5%	1/16W
R2025	1-218-943-11	METAL CHIP	150	5%	1/16W
R2026	1-218-943-11	METAL CHIP	150	5%	1/16W
R2028	1-208-935-11	METAL CHIP	100K	0.5%	1/16W
R2029	1-218-949-11	METAL CHIP	470	5%	1/16W
		< VARISTOR >			
* VDR201	1-802-279-11	VARISTOR (SMD)			
* VDR203	1-802-279-11	VARISTOR (SMD)			
* VDR205	1-802-279-11	VARISTOR (SMD)			

A-1752-124-A GS-010 BOARD, COMPLETE
(EXCEPT NX5C/NX5M)
****

		< CONNECTOR >			
CN8001	1-816-654-61	FFC/FPC CONNECTOR (LIF) 6P			
		< SWITCH >			
S8001	1-771-731-21	SWITCH, SLIDE			

A-1759-066-A GY-022 BOARD, COMPLETE (SERVICE)
****

		< CAPACITOR >			
C8501	1-165-989-11	CERAMIC CHIP	10uF	10%	6.3V
C8502	1-100-611-91	CERAMIC CHIP	22uF	20%	6.3V
C8503	1-100-611-91	CERAMIC CHIP	22uF	20%	6.3V
C8504	1-125-777-11	CERAMIC CHIP	0.1uF	10%	10V
C8505	1-114-411-21	CERAMIC CHIP	0.33uF	10%	6.3V
C8506	1-114-411-21	CERAMIC CHIP	0.33uF	10%	6.3V
C8507	1-165-989-11	CERAMIC CHIP	10uF	10%	6.3V
C8508	1-165-989-11	CERAMIC CHIP	10uF	10%	6.3V
C8509	1-119-923-11	CERAMIC CHIP	0.047uF	10%	10V
C8510	1-119-923-11	CERAMIC CHIP	0.047uF	10%	10V
C8511	1-119-923-11	CERAMIC CHIP	0.047uF	10%	10V
C8512	1-125-777-11	CERAMIC CHIP	0.1uF	10%	10V
C8513	1-119-923-11	CERAMIC CHIP	0.047uF	10%	10V
C8514	1-125-777-11	CERAMIC CHIP	0.1uF	10%	10V
C8515	1-125-777-11	CERAMIC CHIP	0.1uF	10%	10V
C8516	1-125-777-11	CERAMIC CHIP	0.1uF	10%	10V
C8517	1-125-777-11	CERAMIC CHIP	0.1uF	10%	10V

Ref. No.	Part No.	Description			
C8518	1-125-777-11	CERAMIC CHIP	0.1uF	10%	10V
C8519	1-125-777-11	CERAMIC CHIP	0.1uF	10%	10V
C8520	1-165-989-11	CERAMIC CHIP	10uF	10%	6.3V
C8521	1-165-989-11	CERAMIC CHIP	10uF	10%	6.3V
C8522	1-165-989-11	CERAMIC CHIP	10uF	10%	6.3V
		< CONNECTOR >			
CN8501	1-816-655-61	CONNECTOR, FFC/FPC 8P			
		< IC >			
* IC8501	8-753-284-38	IC CXA3739AER-T2			
		< RESISTOR >			
R8509	1-208-943-11	METAL CHIP	220K	0.5%	1/16W
R8510	1-208-943-11	METAL CHIP	220K	0.5%	1/16W
R8511	1-208-911-11	METAL CHIP	10K	0.5%	1/16W
R8512	1-208-911-11	METAL CHIP	10K	0.5%	1/16W
R8513	1-208-711-11	METAL CHIP	15K	0.5%	1/16W
R8514	1-208-711-11	METAL CHIP	15K	0.5%	1/16W
R8515	1-218-969-11	METAL CHIP	22K	5%	1/16W
R8516	1-218-969-11	METAL CHIP	22K	5%	1/16W
R8517	1-218-969-11	METAL CHIP	22K	5%	1/16W
R8518	1-218-969-11	METAL CHIP	22K	5%	1/16W
R8529	1-218-990-81	SHORT CHIP	0		
R8530	1-218-990-81	SHORT CHIP	0		
		< SENSOR >			
* SE8501	1-480-218-11	SENSOR, ANGULAR VELOCITY (31.2kHz) (PITCH)			
* SE8502	1-479-022-61	SENSOR, ANGULAR VELOCITY (32.2kHz) (YAW)			

	A-1752-123-A	HG-001 BOARD, COMPLETE			
		**********			
		< CAPACITOR >			
C7811	1-100-539-91	TANTAL. CHIP	47uF	20%	6.3V
C7813	1-165-908-11	CERAMIC CHIP	1uF	10%	10V
		< CONNECTOR >			
* CN7801	1-817-544-71	CONNECTOR, FPC (ZIF) 39P			
CN7802	1-816-654-61	FFC/FPC CONNECTOR (LIF) 6P			
* CN7803	1-817-829-81	CONNECTOR, FPC (ZIF) 27P			
CN7804	1-816-654-61	FFC/FPC CONNECTOR (LIF) 6P			
		< FILTER >			
FL7801	1-234-939-21	FILTER, EMI REMOVAL (SMD)			
		< RESISTOR >			
R7801	1-218-970-11	METAL CHIP	27K	5%	1/16W
R7802	1-218-968-11	METAL CHIP	18K	5%	1/16W
R7821	1-218-990-81	SHORT CHIP	0		
R7823	1-218-990-81	SHORT CHIP	0		
R7824	1-218-977-11	METAL CHIP	100K	5%	1/16W
R7825	1-218-963-11	METAL CHIP	6.8K	5%	1/16W
		< SWITCH >			
S7801	1-771-487-11	SWITCH, SLIDE			

	A-1752-114-A	HP-156 BOARD, COMPLETE			
		**********			
		< CAPACITOR >			
C3001	1-164-937-11	CERAMIC CHIP	0.001uF	10%	50V
C3002	1-164-937-11	CERAMIC CHIP	0.001uF	10%	50V
C3004	1-100-581-81	CERAMIC CHIP	0.0047uF	10%	50V
C3005	1-100-581-81	CERAMIC CHIP	0.0047uF	10%	50V
		< CONNECTOR >			
CN3001	1-816-655-61	CONNECTOR, FFC/FPC 8P			
		< DIODE >			
D3004	6-502-193-01	DIODE SML-D12V8WT86SN			
		< FERRITE BEAD >			
* FB3001	1-481-300-11	INDUCTOR, FERRITE BEAD			
* FB3002	1-481-300-11	INDUCTOR, FERRITE BEAD			
		< JACK >			
J3001	1-794-525-12	JACK, MIC			
		< COIL >			
* L3001	1-481-381-21	INDUCTOR	100uH		
* L3002	1-481-381-21	INDUCTOR	100uH		
		< TRANSISTOR >			
Q3001	6-551-630-01	TRANSISTOR	RN1102MFV (TL3SONY)		
		< RESISTOR >			
R3002	1-218-990-81	SHORT CHIP	0		
R3003	1-218-938-11	METAL CHIP	56	5%	1/16W
R3005	1-218-953-11	METAL CHIP	1K	5%	1/16W

	A-1752-122-A	HT-003 BOARD, COMPLETE			
		**********			
		< CONNECTOR >			
CN7401	1-794-375-21	PIN, CONNECTOR 2P			
		< SWITCH >			
S7401	1-786-180-11	SWITCH, PUSH (1KEY)			

	A-1752-115-A	JK-392 BOARD, COMPLETE			
		**********			
		< CONNECTOR >			
CN4001	1-819-780-61	CONNECTOR, FPC (ZIF) 27P			
CN4002	1-794-962-11	CONNECTOR, SQUARE TYPE (USB 5P)			
CN4003	1-818-607-12	CONNECTOR, SQUARE TYPE 10P			
CN4004	1-816-655-61	CONNECTOR, FFC/FPC 8P			
		< RESISTOR >			
R4010	1-218-965-11	METAL CHIP	10K	5%	1/16W
		< VARISTOR >			
* VDR401	1-802-279-11	VARISTOR (SMD)			
* VDR402	1-802-279-11	VARISTOR (SMD)			
* VDR403	1-802-279-11	VARISTOR (SMD)			

	A-1752-116-A	KY-115 BOARD, COMPLETE			
		**********			
		< CONNECTOR >			
CN4501	1-816-655-61	CONNECTOR, FFC/FPC 8P			
		< RESISTOR >			
R4502	1-218-954-11	METAL CHIP	1.2K	5%	1/16W
R4503	1-218-954-11	METAL CHIP	1.2K	5%	1/16W
R4504	1-218-954-11	METAL CHIP	1.2K	5%	1/16W
R4505	1-218-955-11	METAL CHIP	1.5K	5%	1/16W
R4506	1-218-955-11	METAL CHIP	1.5K	5%	1/16W
R4507	1-218-955-11	METAL CHIP	1.5K	5%	1/16W
R4508	1-218-957-11	METAL CHIP	2.2K	5%	1/16W
R4509	1-218-957-11	METAL CHIP	2.2K	5%	1/16W
R4510	1-218-957-11	METAL CHIP	2.2K	5%	1/16W
R4511	1-218-960-11	METAL CHIP	3.9K	5%	1/16W
R4512	1-218-960-11	METAL CHIP	3.9K	5%	1/16W
R4513	1-218-960-11	METAL CHIP	3.9K	5%	1/16W
R4514	1-218-964-11	METAL CHIP	8.2K	5%	1/16W
R4515	1-218-964-11	METAL CHIP	8.2K	5%	1/16W
R4516	1-218-964-11	METAL CHIP	8.2K	5%	1/16W
R4517	1-218-970-11	METAL CHIP	27K	5%	1/16W
R4518	1-218-970-11	METAL CHIP	27K	5%	1/16W
		< SWITCH >			
S4501	1-786-157-31	TACTILE SWITCH			
S4502	1-786-157-31	TACTILE SWITCH			
S4503	1-786-157-31	TACTILE SWITCH			
S4504	1-786-157-31	TACTILE SWITCH			
S4505	1-786-157-31	TACTILE SWITCH			
S4506	1-786-157-31	TACTILE SWITCH			
S4507	1-786-157-31	TACTILE SWITCH			
S4508	1-786-157-31	TACTILE SWITCH			
S4509	1-786-157-31	TACTILE SWITCH			
S4510	1-786-157-31	TACTILE SWITCH			
S4511	1-786-157-31	TACTILE SWITCH			
S4512	1-786-157-31	TACTILE SWITCH			
S4513	1-786-157-31	TACTILE SWITCH			
S4514	1-786-157-31	TACTILE SWITCH			
S4515	1-786-157-31	TACTILE SWITCH			
S4516	1-786-157-31	TACTILE SWITCH			
S4517	1-786-157-31	TACTILE SWITCH			
S4518	1-786-157-31	TACTILE SWITCH			
S4519	1-786-157-31	TACTILE SWITCH			
S4520	1-786-157-31	TACTILE SWITCH			
S4521	1-786-157-31	TACTILE SWITCH			
		< VARISTOR >			
* VDR001	1-802-279-11	VARISTOR (SMD)			
* VDR002	1-802-279-11	VARISTOR (SMD)			
* VDR003	1-802-279-11	VARISTOR (SMD)			
* VDR004	1-802-279-11	VARISTOR (SMD)			

	A-1752-117-A	MA-459 BOARD, COMPLETE			
		**********			
		< CAPACITOR >			
C5001	1-164-874-11	CERAMIC CHIP	100PF	5%	50V
C5002	1-164-874-11	CERAMIC CHIP	100PF	5%	50V
C5003	1-164-874-11	CERAMIC CHIP	100PF	5%	50V
C5004	1-165-908-11	CERAMIC CHIP	1uF	10%	10V
C5005	1-165-908-11	CERAMIC CHIP	1uF	10%	10V
C5006	1-165-908-11	CERAMIC CHIP	1uF	10%	10V
C5007	1-100-611-91	CERAMIC CHIP	22uF	20%	6.3V
C5010	1-165-884-11	CERAMIC CHIP	2.2uF	10%	6.3V
C5011	1-165-884-11	CERAMIC CHIP	2.2uF	10%	6.3V
C5012	1-165-884-11	CERAMIC CHIP	2.2uF	10%	6.3V
C5013	1-100-567-81	CERAMIC CHIP	0.01uF	10%	25V
C5016	1-100-611-91	CERAMIC CHIP	22uF	20%	6.3V
C5017	1-100-743-91	CERAMIC CHIP	2.2uF	20%	16V
		< CONNECTOR >			
CN5001	1-817-054-21	PIN, CONNECTOR 6P			
* CN5002	1-817-697-51	CONNECTOR, FPC (ZIF) 19P			
		< DIODE >			
D5001	6-502-193-01	DIODE SML-D12V8WT86SN			
		< IC >			
IC5001	8-759-422-21	IC NJM4580V (TE2)			
IC5002	8-759-422-21	IC NJM4580V (TE2)			
		< TRANSISTOR >			
Q5001	6-551-630-01	TRANSISTOR	RN1102MFV (TL3SONY)		
		< RESISTOR >			
R5001	1-208-697-11	METAL CHIP	3.9K	0.5%	1/16W
R5002	1-208-697-11	METAL CHIP	3.9K	0.5%	1/16W
R5003	1-208-697-11	METAL CHIP	3.9K	0.5%	1/16W
R5004	1-208-935-11	METAL CHIP	100K	0.5%	1/16W
R5005	1-208-935-11	METAL CHIP	100K	0.5%	1/16W
R5006	1-208-935-11	METAL CHIP	100K	0.5%	1/16W
R5007	1-218-855-11	METAL CHIP	2.2K	0.5%	1/10W
R5008	1-218-855-11	METAL CHIP	2.2K	0.5%	1/10W
R5009	1-218-855-11	METAL CHIP	2.2K	0.5%	1/10W
R5010	1-218-855-11	METAL CHIP	2.2K	0.5%	1/10W
R5011	1-218-855-11	METAL CHIP	2.2K	0.5%	1/10W
R5012	1-218-855-11	METAL CHIP	2.2K	0.5%	1/10W
R5015	1-218-945-11	METAL CHIP	220	5%	1/16W
R5016	1-218-977-11	METAL CHIP	100K	5%	1/16W
R5017	1-218-976-11	METAL CHIP	82K	5%	1/16W
R5018	1-218-941-81	METAL CHIP	100	5%	1/16W
R5019	1-218-941-81	METAL CHIP	100	5%	1/16W

Ref. No.	Part No.	Description			
R5020	1-218-941-81	METAL CHIP	100	5%	1/16W
R5021	1-218-446-11	METAL CHIP	1	5%	1/10W
R5022	1-218-938-11	METAL CHIP	56	5%	1/16W
R5024	1-218-941-81	METAL CHIP	100	5%	1/16W

A-1752-120-A MS-424 BOARD, COMPLETE
****

< CAPACITOR >

C5518	1-165-989-11	CERAMIC CHIP	10uF	10%	6.3V
C5519	1-165-989-11	CERAMIC CHIP	10uF	10%	6.3V
C5520	1-125-777-11	CERAMIC CHIP	0.1uF	10%	10V
C5521	1-125-777-11	CERAMIC CHIP	0.1uF	10%	10V
C5522	1-165-908-11	CERAMIC CHIP	1uF	10%	10V
C5523	1-165-908-11	CERAMIC CHIP	1uF	10%	10V
C5524	1-125-777-11	CERAMIC CHIP	0.1uF	10%	10V
C5525	1-125-777-11	CERAMIC CHIP	0.1uF	10%	10V
C5526	1-165-908-11	CERAMIC CHIP	1uF	10%	10V
C5527	1-165-908-11	CERAMIC CHIP	1uF	10%	10V

< CONNECTOR >

* CN5501	1-821-501-11	CONNECTOR, FPC (ZIF) 51P
CN5502	1-822-837-21	CARD CONNECTOR
CN5503	1-822-837-21	CARD CONNECTOR

< DIODE >

D5501	6-502-193-01	DIODE SML-D12V8WT86SN
D5502	6-500-594-01	DIODE CL-196SYG-CD-T
D5503	6-502-193-01	DIODE SML-D12V8WT86SN
D5504	6-500-594-01	DIODE CL-196SYG-CD-T
* D5505	6-502-947-01	DIODE RB751CS-40T2R
* D5506	6-502-947-01	DIODE RB751CS-40T2R
* D5507	6-502-947-01	DIODE RB751CS-40T2R
* D5508	6-502-947-01	DIODE RB751CS-40T2R
* D5509	6-502-947-01	DIODE RB751CS-40T2R

< FERRITE BEAD >

FB5501	1-469-580-21	INDUCTOR, FERRITE BEAD (1005)
FB5502	1-469-580-21	INDUCTOR, FERRITE BEAD (1005)
FB5503	1-469-580-21	INDUCTOR, FERRITE BEAD (1005)
FB5504	1-469-580-21	INDUCTOR, FERRITE BEAD (1005)
FB5505	1-469-580-21	INDUCTOR, FERRITE BEAD (1005)
FB5506	1-469-580-21	INDUCTOR, FERRITE BEAD (1005)
FB5507	1-469-580-21	INDUCTOR, FERRITE BEAD (1005)
FB5508	1-469-580-21	INDUCTOR, FERRITE BEAD (1005)
FB5509	1-469-580-21	INDUCTOR, FERRITE BEAD (1005)
FB5510	1-469-580-21	INDUCTOR, FERRITE BEAD (1005)
FB5511	1-469-580-21	INDUCTOR, FERRITE BEAD (1005)
FB5512	1-469-580-21	INDUCTOR, FERRITE BEAD (1005)

< IC >

IC5501	8-759-058-62	IC TC7S08FU (TE85R)
IC5502	8-759-058-62	IC TC7S08FU (TE85R)
* IC5508	6-712-135-01	IC R1173H001D-T1-F
* IC5509	6-714-502-01	IC BD2224G-TR
* IC5510	6-714-502-01	IC BD2224G-TR
* IC5511	6-714-502-01	IC BD2224G-TR
* IC5512	6-714-502-01	IC BD2224G-TR

< TRANSISTOR >

Q5501	6-551-631-01	TRANSISTOR	RN1104MFV (TL3SONY)
Q5502	6-551-631-01	TRANSISTOR	RN1104MFV (TL3SONY)

< RESISTOR >

R5507	1-218-954-11	METAL CHIP	1.2K	5%	1/16W
R5508	1-218-945-11	METAL CHIP	220	5%	1/16W
R5509	1-218-945-11	METAL CHIP	220	5%	1/16W
R5510	1-218-945-11	METAL CHIP	220	5%	1/16W
R5511	1-218-945-11	METAL CHIP	220	5%	1/16W
R5522	1-218-990-81	SHORT CHIP	0		
R5523	1-218-941-81	METAL CHIP	100	5%	1/16W
R5524	1-218-941-81	METAL CHIP	100	5%	1/16W
R5525	1-218-941-81	METAL CHIP	100	5%	1/16W
R5526	1-218-941-81	METAL CHIP	100	5%	1/16W
R5527	1-218-941-81	METAL CHIP	100	5%	1/16W
R5551	1-218-941-81	METAL CHIP	100	5%	1/16W
R5552	1-218-941-81	METAL CHIP	100	5%	1/16W
R5555	1-218-939-11	METAL CHIP	68	5%	1/16W
R5556	1-218-935-11	METAL CHIP	33	5%	1/16W
R5557	1-218-941-81	METAL CHIP	100	5%	1/16W
R5558	1-218-941-81	METAL CHIP	100	5%	1/16W
R5564	1-218-939-11	METAL CHIP	68	5%	1/16W
R5565	1-218-941-81	METAL CHIP	100	5%	1/16W
R5566	1-218-941-81	METAL CHIP	100	5%	1/16W
R5567	1-218-941-81	METAL CHIP	100	5%	1/16W
R5568	1-218-941-81	METAL CHIP	100	5%	1/16W
R5569	1-218-935-11	METAL CHIP	33	5%	1/16W
R5581	1-218-977-11	METAL CHIP	100K	5%	1/16W
R5582	1-218-977-11	METAL CHIP	100K	5%	1/16W
R5583	1-218-977-11	METAL CHIP	100K	5%	1/16W
R5584	1-218-977-11	METAL CHIP	100K	5%	1/16W
R5585	1-218-977-11	METAL CHIP	100K	5%	1/16W
R5586	1-218-990-81	SHORT CHIP	0		
R5587	1-218-990-81	SHORT CHIP	0		
R5588	1-218-941-11	METAL CHIP	100	5%	1/16W
R5589	1-208-691-11	METAL CHIP	2.2K	0.5%	1/16W
R5590	1-208-683-11	METAL CHIP	1K	0.5%	1/16W
R5591	1-218-965-11	METAL CHIP	10K	5%	1/16W
R5592	1-218-965-11	METAL CHIP	10K	5%	1/16W
R5593	1-218-965-11	METAL CHIP	10K	5%	1/16W
R5594	1-218-965-11	METAL CHIP	10K	5%	1/16W
R5596	1-218-977-11	METAL CHIP	100K	5%	1/16W
R5597	1-218-977-11	METAL CHIP	100K	5%	1/16W
R5598	1-218-977-11	METAL CHIP	100K	5%	1/16W
R5599	1-218-977-11	METAL CHIP	100K	5%	1/16W
R5600	1-218-977-11	METAL CHIP	100K	5%	1/16W
R5601	1-218-977-11	METAL CHIP	100K	5%	1/16W
R5602	1-218-977-11	METAL CHIP	100K	5%	1/16W

< SWITCH >

S5501	1-786-723-11	SWITCH, TACTILE
S5502	1-786-723-11	SWITCH, TACTILE

< VARISTOR >

* VDR551	1-802-279-11	VARISTOR (SMD)

A-1752-128-A PD-395 BOARD, COMPLETE
****

< CAPACITOR >

C2001	1-100-581-81	CERAMIC CHIP	0.0047uF	10%	50V
C2002	1-100-581-81	CERAMIC CHIP	0.0047uF	10%	50V
C2003	1-119-750-11	TANTAL. CHIP	22uF	20%	6.3V
C2004	1-125-777-11	CERAMIC CHIP	0.1uF	10%	10V
C2005	1-165-875-11	CERAMIC CHIP	10uF	10%	10V
C2006	1-112-300-91	CERAMIC CHIP	4.7uF	10%	10V
* C2008	1-112-746-11	CERAMIC CHIP	4.7uF	10%	6.3V
C2009	1-125-777-11	CERAMIC CHIP	0.1uF	10%	10V
C2010	1-112-300-91	CERAMIC CHIP	4.7uF	10%	10V
C2011	1-165-884-11	CERAMIC CHIP	2.2uF	10%	6.3V
C2012	1-127-861-11	CERAMIC CHIP	2.2uF	10%	16V
C2013	1-165-884-11	CERAMIC CHIP	2.2uF	10%	6.3V
C2014	1-112-300-91	CERAMIC CHIP	4.7uF	10%	10V
C2015	1-112-300-91	CERAMIC CHIP	4.7uF	10%	10V
C2016	1-165-908-11	CERAMIC CHIP	1uF	10%	10V
C2017	1-165-908-11	CERAMIC CHIP	1uF	10%	10V
C2018	1-125-889-11	CERAMIC CHIP	2.2uF	10%	10V
C2019	1-165-884-11	CERAMIC CHIP	2.2uF	10%	6.3V
C2020	1-165-884-11	CERAMIC CHIP	2.2uF	10%	6.3V
C2021	1-165-884-11	CERAMIC CHIP	2.2uF	10%	6.3V
C2022	1-165-884-11	CERAMIC CHIP	2.2uF	10%	6.3V
C2023	1-165-884-11	CERAMIC CHIP	2.2uF	10%	6.3V
C2024	1-127-861-11	CERAMIC CHIP	2.2uF	10%	16V

< CONNECTOR >

* CN2001	1-821-760-21	CONNECTOR, COAXIAL (RECEPTACLE)
* CN2002	1-794-322-51	FFC/CONNECTOR, FPC (ZIF) 6P
* CN2003	1-794-322-51	FFC/CONNECTOR, FPC (ZIF) 6P
* CN2004	1-818-818-81	CONNECTOR, FPC (ZIF) 29P
* CN2005	1-817-942-81	CONNECTOR, FPC (ZIF) 39P

< DIODE >

D2002	8-719-069-29	DIODE RB520S-30FJTE61
D2003	8-719-069-29	DIODE RB520S-30FJTE61

< FERRITE BEAD >

FB2001	1-469-581-21	INDUCTOR, FERRITE BEAD (1005)

< IC >

* IC2001	6-712-051-01	IC SN65LVDS302ZQER

< COIL >

* L2001	1-481-425-21	INDUCTOR	10uH
* L2002	1-481-425-21	INDUCTOR	10uH
* L2003	1-481-425-21	INDUCTOR	10uH

< TRANSISTOR >

Q2001	8-729-427-37	TRANSISTOR	XP411F-TXE
Q2002	8-729-427-67	TRANSISTOR	XP421F-TXE

< RESISTOR >

R2004	1-218-973-11	METAL CHIP	47K	5%	1/16W
R2006	1-218-940-11	METAL CHIP	82	5%	1/16W
R2007	1-218-973-11	METAL CHIP	47K	5%	1/16W
R2008	1-218-973-11	METAL CHIP	47K	5%	1/16W
R2009	1-218-973-11	METAL CHIP	47K	5%	1/16W
R2012	1-218-973-11	METAL CHIP	47K	5%	1/16W
R2014	1-218-973-11	METAL CHIP	47K	5%	1/16W
R2015	1-216-833-11	METAL CHIP	10K	5%	1/10W
R2018	1-216-833-11	METAL CHIP	10K	5%	1/10W
R2022	1-218-990-81	SHORT CHIP	0		

A-1752-129-A PI-030 BOARD, COMPLETE
****

< CAPACITOR >

C2502	1-131-861-91	TANTAL. CHIP	4.7uF	20%	20V
C2504	1-165-908-11	CERAMIC CHIP	1uF	10%	10V
C2505	1-137-910-11	TANTAL. CHIP	10uF	20%	16V
C2506	1-165-908-11	CERAMIC CHIP	1uF	10%	10V
C2509	1-164-245-11	CERAMIC CHIP	0.015uF	10%	25V
C2511	1-127-715-11	CERAMIC CHIP	0.22uF	10%	16V
C2512	1-127-715-11	CERAMIC CHIP	0.22uF	10%	16V
C2513	1-125-891-11	CERAMIC CHIP	0.47uF	10%	10V
C2514	1-125-891-11	CERAMIC CHIP	0.47uF	10%	10V
C2515	1-100-567-81	CERAMIC CHIP	0.01uF	10%	25V
C2517	1-127-820-11	CERAMIC CHIP	4.7uF	10%	16V

< CONNECTOR >

* CN2501	1-821-760-21	CONNECTOR, COAXIAL (RECEPTACLE)
* CN2502	1-816-643-51	FFC/FPC CONNECTOR (LIF) 10P
CN2503	1-778-506-21	PIN, CONNECTOR (PC BOARD) 2P
CN2504	1-817-920-11	CONNECTOR, FPC (ZIF) 80P
CN2505	1-794-375-21	PIN, CONNECTOR 2P
* CN2507	1-816-650-51	FFC/CONNECTOR, FPC (LIF) 24P
CN2508	1-816-655-61	CONNECTOR, FFC/FPC 8P
* CN2509	1-817-697-51	CONNECTOR, FPC (ZIF) 19P
CN2510	1-691-346-61	CONNECTOR, FFC/FPC (ZIF) 8P

< IC >

IC2501	6-703-228-01	IC TK11160CSCL-G
IC2502	8-759-581-11	IC NJM2125F (TE2)
IC2503	8-759-581-11	IC NJM2125F (TE2)
IC2505	8-759-581-11	IC NJM2125F (TE2)
IC2508	8-759-564-49	IC TC7W53FU (TE12R)
IC2509	6-707-702-01	IC NJM2746RB1 (TE2)
IC2510	6-707-702-01	IC NJM2746RB1 (TE2)

< TRANSISTOR >

* Q2501	6-551-624-01	TRANSISTOR	RN2102MFV (TL3SONY)
* Q2502	6-551-624-01	TRANSISTOR	RN2102MFV (TL3SONY)
Q2503	6-551-631-01	TRANSISTOR	RN1104MFV (TL3SONY)
Q2504	6-551-631-01	TRANSISTOR	RN1104MFV (TL3SONY)
Q2505	6-551-631-01	TRANSISTOR	RN1104MFV (TL3SONY)
Q2507	8-729-044-37	TRANSISTOR	LSK3019FP8TL

Ref. No.	Part No.	Description			
		< RESISTOR >			
R2502	1-217-806-11	METAL CHIP	1	5%	1/8W
R2503	1-208-911-11	METAL CHIP	10K	0.5%	1/16W
R2504	1-208-911-11	METAL CHIP	10K	0.5%	1/16W
R2505	1-208-911-11	METAL CHIP	10K	0.5%	1/16W
R2506	1-208-911-11	METAL CHIP	10K	0.5%	1/16W
R2509	1-208-911-11	METAL CHIP	10K	0.5%	1/16W
R2510	1-208-911-11	METAL CHIP	10K	0.5%	1/16W
R2513	1-208-713-11	METAL CHIP	18K	0.5%	1/16W
R2514	1-208-889-11	METAL CHIP	1.2K	0.5%	1/16W
R2515	1-218-975-11	METAL CHIP	68K	5%	1/16W
R2516	1-218-973-11	METAL CHIP	47K	5%	1/16W
R2517	1-218-973-11	METAL CHIP	47K	5%	1/16W
R2519	1-208-911-11	METAL CHIP	10K	0.5%	1/16W
R2520	1-208-911-11	METAL CHIP	10K	0.5%	1/16W
R2521	1-208-911-11	METAL CHIP	10K	0.5%	1/16W
R2523	1-208-922-11	METAL CHIP	30K	0.5%	1/16W
R2524	1-208-911-11	METAL CHIP	10K	0.5%	1/16W
R2525	1-218-975-11	METAL CHIP	68K	5%	1/16W
R2526	1-208-922-11	METAL CHIP	30K	0.5%	1/16W
R2531	1-218-941-81	METAL CHIP	100	5%	1/16W
R2532	1-218-941-81	METAL CHIP	100	5%	1/16W
R2533	1-208-911-11	METAL CHIP	10K	0.5%	1/16W
R2534	1-208-911-11	METAL CHIP	10K	0.5%	1/16W
R2535	1-208-911-11	METAL CHIP	10K	0.5%	1/16W
R2536	1-208-911-11	METAL CHIP	10K	0.5%	1/16W

	A-1752-121-A	TC-001 BOARD, COMPLETE **********			
		< CAPACITOR >			
C6503	1-125-777-11	CERAMIC CHIP	0.1uF	10%	10V
C6506	1-125-777-11	CERAMIC CHIP	0.1uF	10%	10V
C6510	1-125-777-11	CERAMIC CHIP	0.1uF	10%	10V
C6511	1-100-611-91	CERAMIC CHIP	22uF	20%	6.3V
C6514	1-165-989-11	CERAMIC CHIP	10uF	10%	6.3V
C6519	1-165-989-11	CERAMIC CHIP	10uF	10%	6.3V
		< CONNECTOR >			
CN6501	1-816-655-61	CONNECTOR, FFC/FPC 8P			
CN6502	1-793-446-11	JACK, PIN 1P			
CN6503	1-816-654-61	FFC/FPC CONNECTOR (LIF) 6P			
		< DIODE >			
D6501	8-719-069-29	DIODE RB520S-30FJTE61			
D6502	8-719-069-29	DIODE RB520S-30FJTE61			
		< IC >			
IC6501	6-710-786-01	IC TC7SH125FU (T5RSOYF)			
IC6504	8-759-494-88	IC TC75S56F (TE85R)			
IC6506	8-759-678-15	IC TLV2231CDBVR			
		< RESISTOR >			
R6512	1-218-954-11	METAL CHIP	1.2K	5%	1/16W
R6514	1-218-989-11	METAL CHIP	1M	5%	1/16W
R6516	1-208-911-11	METAL CHIP	10K	0.5%	1/16W
R6517	1-218-953-11	METAL CHIP	1K	5%	1/16W

Ref. No.	Part No.	Description			
R6519	1-208-715-11	METAL CHIP	22K	0.5%	1/16W
R6520	1-218-969-11	METAL CHIP	22K	5%	1/16W
R6523	1-208-715-11	METAL CHIP	22K	0.5%	1/16W
R6524	1-208-911-11	METAL CHIP	10K	0.5%	1/16W
R6525	1-208-715-11	METAL CHIP	22K	0.5%	1/16W
R6526	1-208-911-11	METAL CHIP	10K	0.5%	1/16W
R6529	1-218-963-11	METAL CHIP	6.8K	5%	1/16W
R6534	1-218-929-11	METAL CHIP	10	5%	1/16W
R6536	1-218-963-11	METAL CHIP	6.8K	5%	1/16W
R6540	1-218-963-11	METAL CHIP	6.8K	5%	1/16W

	A-1752-126-A	TS-157 BOARD, COMPLETE **********			
		< CONNECTOR >			
CN9001	1-816-654-61	FFC/FPC CONNECTOR (LIF) 6P			
		< SWITCH >			
S9001	1-786-043-21	SWITCH, SLIDE			

	A-1758-578-A	VC-582 BOARD, COMPLETE (SERVICE) **********			
(CN4402, IC2001 and IC2601 are not supplied, but they are included in VC-582 complete board (service).)					
		< CAPACITOR >			
C1007	1-112-717-91	CERAMIC CHIP	1uF	10%	6.3V
C1009	1-127-715-11	CERAMIC CHIP	0.22uF	10%	16V
C1010	1-165-908-11	CERAMIC CHIP	1uF	10%	10V
C1011	1-100-567-81	CERAMIC CHIP	0.01uF	10%	25V
C1012	1-100-567-81	CERAMIC CHIP	0.01uF	10%	25V
C1013	1-125-777-11	CERAMIC CHIP	0.1uF	10%	10V
C1214	1-112-717-91	CERAMIC CHIP	1uF	10%	6.3V
C1215	1-112-717-91	CERAMIC CHIP	1uF	10%	6.3V
C1216	1-112-717-91	CERAMIC CHIP	1uF	10%	6.3V
C1217	1-112-717-91	CERAMIC CHIP	1uF	10%	6.3V
C1218	1-125-777-11	CERAMIC CHIP	0.1uF	10%	10V
C1219	1-125-777-11	CERAMIC CHIP	0.1uF	10%	10V
C1220	1-125-777-11	CERAMIC CHIP	0.1uF	10%	10V
C1221	1-125-777-11	CERAMIC CHIP	0.1uF	10%	10V
C1222	1-112-717-91	CERAMIC CHIP	1uF	10%	6.3V
C1223	1-112-717-91	CERAMIC CHIP	1uF	10%	6.3V
C1224	1-125-777-11	CERAMIC CHIP	0.1uF	10%	10V
C1225	1-125-777-11	CERAMIC CHIP	0.1uF	10%	10V
C1401	1-125-777-11	CERAMIC CHIP	0.1uF	10%	10V
C1402	1-125-777-11	CERAMIC CHIP	0.1uF	10%	10V
C1403	1-125-777-11	CERAMIC CHIP	0.1uF	10%	10V
C1404	1-125-777-11	CERAMIC CHIP	0.1uF	10%	10V
C1405	1-125-777-11	CERAMIC CHIP	0.1uF	10%	10V
C1406	1-125-777-11	CERAMIC CHIP	0.1uF	10%	10V
C1407	1-125-777-11	CERAMIC CHIP	0.1uF	10%	10V
C1408	1-125-777-11	CERAMIC CHIP	0.1uF	10%	10V
C1409	1-125-777-11	CERAMIC CHIP	0.1uF	10%	10V
C1410	1-125-777-11	CERAMIC CHIP	0.1uF	10%	10V
C1411	1-125-777-11	CERAMIC CHIP	0.1uF	10%	10V
C1412	1-125-777-11	CERAMIC CHIP	0.1uF	10%	10V

Ref. No.	Part No.	Description			
C1413	1-125-777-11	CERAMIC CHIP	0.1uF	10%	10V
C1414	1-125-777-11	CERAMIC CHIP	0.1uF	10%	10V
C1415	1-125-777-11	CERAMIC CHIP	0.1uF	10%	10V
C1416	1-125-777-11	CERAMIC CHIP	0.1uF	10%	10V
C1417	1-119-750-11	TANTAL. CHIP	22uF	20%	6.3V
C1418	1-119-750-11	TANTAL. CHIP	22uF	20%	6.3V
C1419	1-119-750-11	TANTAL. CHIP	22uF	20%	6.3V
C1420	1-125-777-11	CERAMIC CHIP	0.1uF	10%	10V
C1421	1-119-750-11	TANTAL. CHIP	22uF	20%	6.3V
C1422	1-119-750-11	TANTAL. CHIP	22uF	20%	6.3V
C1423	1-119-750-11	TANTAL. CHIP	22uF	20%	6.3V
C1424	1-119-750-11	TANTAL. CHIP	22uF	20%	6.3V
C1431	1-165-908-11	CERAMIC CHIP	1uF	10%	10V
C1432	1-165-908-11	CERAMIC CHIP	1uF	10%	10V
C1440	1-125-777-11	CERAMIC CHIP	0.1uF	10%	10V
C1441	1-117-919-11	TANTAL. CHIP	10uF	20%	6.3V
C1443	1-125-777-11	CERAMIC CHIP	0.1uF	10%	10V
C1444	1-125-777-11	CERAMIC CHIP	0.1uF	10%	10V
C1445	1-125-777-11	CERAMIC CHIP	0.1uF	10%	10V
C1446	1-117-919-11	TANTAL. CHIP	10uF	20%	6.3V
C1447	1-164-854-11	CERAMIC CHIP	15PF	5%	50V
C1448	1-125-777-11	CERAMIC CHIP	0.1uF	10%	10V
C1449	1-125-777-11	CERAMIC CHIP	0.1uF	10%	10V
C1601	1-125-777-11	CERAMIC CHIP	0.1uF	10%	10V
C1602	1-125-777-11	CERAMIC CHIP	0.1uF	10%	10V
C1603	1-125-777-11	CERAMIC CHIP	0.1uF	10%	10V
C1604	1-125-777-11	CERAMIC CHIP	0.1uF	10%	10V
C1605	1-119-750-11	TANTAL. CHIP	22uF	20%	6.3V
C1606	1-125-777-11	CERAMIC CHIP	0.1uF	10%	10V
C2001	1-125-777-11	CERAMIC CHIP	0.1uF	10%	10V
C2003	1-125-777-11	CERAMIC CHIP	0.1uF	10%	10V
C2004	1-100-611-91	CERAMIC CHIP	22uF	20%	6.3V
C2005	1-100-611-91	CERAMIC CHIP	22uF	20%	6.3V
C2007	1-125-777-11	CERAMIC CHIP	0.1uF	10%	10V
C2008	1-125-777-11	CERAMIC CHIP	0.1uF	10%	10V
C2012	1-125-777-11	CERAMIC CHIP	0.1uF	10%	10V
C2013	1-125-777-11	CERAMIC CHIP	0.1uF	10%	10V
C2014	1-125-777-11	CERAMIC CHIP	0.1uF	10%	10V
C2015	1-125-777-11	CERAMIC CHIP	0.1uF	10%	10V
C2016	1-125-777-11	CERAMIC CHIP	0.1uF	10%	10V
C2017	1-125-777-11	CERAMIC CHIP	0.1uF	10%	10V
C2018	1-125-777-11	CERAMIC CHIP	0.1uF	10%	10V
C2019	1-125-777-11	CERAMIC CHIP	0.1uF	10%	10V
C2020	1-125-777-11	CERAMIC CHIP	0.1uF	10%	10V
C2021	1-165-884-11	CERAMIC CHIP	2.2uF	10%	6.3V
C2022	1-165-884-11	CERAMIC CHIP	2.2uF	10%	6.3V
C2023	1-165-884-11	CERAMIC CHIP	2.2uF	10%	6.3V
C2024	1-165-908-11	CERAMIC CHIP	1uF	10%	10V
C2025	1-125-777-11	CERAMIC CHIP	0.1uF	10%	10V
C2026	1-125-777-11	CERAMIC CHIP	0.1uF	10%	10V
C2028	1-125-777-11	CERAMIC CHIP	0.1uF	10%	10V
C2029	1-125-777-11	CERAMIC CHIP	0.1uF	10%	10V
C2030	1-125-777-11	CERAMIC CHIP	0.1uF	10%	10V
C2032	1-165-908-11	CERAMIC CHIP	1uF	10%	10V
C2033	1-125-777-11	CERAMIC CHIP	0.1uF	10%	10V
C2034	1-165-908-11	CERAMIC CHIP	1uF	10%	10V
C2201	1-100-611-91	CERAMIC CHIP	22uF	20%	6.3V
C2202	1-125-777-11	CERAMIC CHIP	0.1uF	10%	10V
C2203	1-125-777-11	CERAMIC CHIP	0.1uF	10%	10V

Ref. No.	Part No.	Description			
C2204	1-100-611-91	CERAMIC CHIP	22uF	20%	6.3V
C2205	1-125-777-11	CERAMIC CHIP	0.1uF	10%	10V
C2206	1-125-777-11	CERAMIC CHIP	0.1uF	10%	10V
C2207	1-125-777-11	CERAMIC CHIP	0.1uF	10%	10V
C2208	1-125-777-11	CERAMIC CHIP	0.1uF	10%	10V
C2209	1-100-611-91	CERAMIC CHIP	22uF	20%	6.3V
C2301	1-125-777-11	CERAMIC CHIP	0.1uF	10%	10V
C2304	1-125-777-11	CERAMIC CHIP	0.1uF	10%	10V
C2305	1-100-567-81	CERAMIC CHIP	0.01uF	10%	25V
C2306	1-125-777-11	CERAMIC CHIP	0.1uF	10%	10V
C2307	1-125-777-11	CERAMIC CHIP	0.1uF	10%	10V
* C2308	1-112-746-11	CERAMIC CHIP	4.7uF	10%	6.3V
C2309	1-125-777-11	CERAMIC CHIP	0.1uF	10%	10V
C2310	1-125-777-11	CERAMIC CHIP	0.1uF	10%	10V
C2311	1-125-777-11	CERAMIC CHIP	0.1uF	10%	10V
C2312	1-125-777-11	CERAMIC CHIP	0.1uF	10%	10V
C2313	1-125-777-11	CERAMIC CHIP	0.1uF	10%	10V
C2314	1-125-777-11	CERAMIC CHIP	0.1uF	10%	10V
* C2315	1-112-746-11	CERAMIC CHIP	4.7uF	10%	6.3V
* C2316	1-112-746-11	CERAMIC CHIP	4.7uF	10%	6.3V
C2317	1-125-777-11	CERAMIC CHIP	0.1uF	10%	10V
C2318	1-125-777-11	CERAMIC CHIP	0.1uF	10%	10V
* C2319	1-112-746-11	CERAMIC CHIP	4.7uF	10%	6.3V
C2504	1-125-777-11	CERAMIC CHIP	0.1uF	10%	10V
C2507	1-125-777-11	CERAMIC CHIP	0.1uF	10%	10V
C2508	1-125-777-11	CERAMIC CHIP	0.1uF	10%	10V
C2509	1-100-539-91	TANTAL. CHIP	47uF	20%	6.3V
C2510	1-165-989-11	CERAMIC CHIP	10uF	10%	6.3V
C2511	1-165-989-11	CERAMIC CHIP	10uF	10%	6.3V
C2512	1-125-777-11	CERAMIC CHIP	0.1uF	10%	10V
C2513	1-125-777-11	CERAMIC CHIP	0.1uF	10%	10V
C2514	1-125-777-11	CERAMIC CHIP	0.1uF	10%	10V
C2515	1-125-777-11	CERAMIC CHIP	0.1uF	10%	10V
C2516	1-125-777-11	CERAMIC CHIP	0.1uF	10%	10V
C2517	1-125-777-11	CERAMIC CHIP	0.1uF	10%	10V
C2518	1-125-777-11	CERAMIC CHIP	0.1uF	10%	10V
C2519	1-125-777-11	CERAMIC CHIP	0.1uF	10%	10V
C2520	1-125-777-11	CERAMIC CHIP	0.1uF	10%	10V
* C2521	1-112-746-11	CERAMIC CHIP	4.7uF	10%	6.3V
* C2522	1-112-746-11	CERAMIC CHIP	4.7uF	10%	6.3V
C2603	1-125-777-11	CERAMIC CHIP	0.1uF	10%	10V
C2604	1-125-777-11	CERAMIC CHIP	0.1uF	10%	10V
C2605	1-125-777-11	CERAMIC CHIP	0.1uF	10%	10V
C2606	1-125-777-11	CERAMIC CHIP	0.1uF	10%	10V
C2607	1-127-760-11	CERAMIC CHIP	4.7uF	10%	6.3V
C2608	1-125-777-11	CERAMIC CHIP	0.1uF	10%	10V
C2609	1-100-539-91	TANTAL. CHIP	47uF	20%	6.3V
C2610	1-127-760-11	CERAMIC CHIP	4.7uF	10%	6.3V
C2611	1-125-777-11	CERAMIC CHIP	0.1uF	10%	10V
C2612	1-125-777-11	CERAMIC CHIP	0.1uF	10%	10V
C2805	1-125-777-11	CERAMIC CHIP	0.1uF	10%	10V
C2809	1-100-539-91	TANTAL. CHIP	47uF	20%	6.3V
C2810	1-100-539-91	TANTAL. CHIP	47uF	20%	6.3V
C2811	1-119-750-11	TANTAL. CHIP	22uF	20%	6.3V
C2814	1-100-567-81	CERAMIC CHIP	0.01uF	10%	25V
C2816	1-165-908-11	CERAMIC CHIP	1uF	10%	10V
C2817	1-127-760-11	CERAMIC CHIP	4.7uF	10%	6.3V
C2822	1-125-777-11	CERAMIC CHIP	0.1uF	10%	10V

Ref. No.	Part No.	Description			
C2826	1-125-777-11	CERAMIC CHIP	0.1uF	10%	10V
C2827	1-125-777-11	CERAMIC CHIP	0.1uF	10%	10V
C2840	1-125-777-11	CERAMIC CHIP	0.1uF	10%	10V
C2841	1-165-908-11	CERAMIC CHIP	1uF	10%	10V
C2842	1-165-884-11	CERAMIC CHIP	2.2uF	10%	6.3V
C2843	1-165-884-11	CERAMIC CHIP	2.2uF	10%	6.3V
C2844	1-165-884-11	CERAMIC CHIP	2.2uF	10%	6.3V
C2845	1-119-750-11	TANTAL. CHIP	22uF	20%	6.3V
C2846	1-165-908-11	CERAMIC CHIP	1uF	10%	10V
C2847	1-165-908-11	CERAMIC CHIP	1uF	10%	10V
C2848	1-165-908-11	CERAMIC CHIP	1uF	10%	10V
C2849	1-165-908-11	CERAMIC CHIP	1uF	10%	10V
C2853	1-112-300-91	CERAMIC CHIP	4.7uF	10%	10V
C2854	1-112-300-91	CERAMIC CHIP	4.7uF	10%	10V
C2855	1-125-777-11	CERAMIC CHIP	0.1uF	10%	10V
C2856	1-125-777-11	CERAMIC CHIP	0.1uF	10%	10V
C2858	1-165-989-11	CERAMIC CHIP	10uF	10%	6.3V
C2859	1-165-989-11	CERAMIC CHIP	10uF	10%	6.3V
C2861	1-125-777-11	CERAMIC CHIP	0.1uF	10%	10V
C3002	1-100-539-91	TANTAL. CHIP	47uF	20%	6.3V
C3003	1-100-539-91	TANTAL. CHIP	47uF	20%	6.3V
C3005	1-125-777-11	CERAMIC CHIP	0.1uF	10%	10V
C3008	1-125-777-11	CERAMIC CHIP	0.1uF	10%	10V
C3009	1-125-777-11	CERAMIC CHIP	0.1uF	10%	10V
C3010	1-125-777-11	CERAMIC CHIP	0.1uF	10%	10V
C3011	1-125-777-11	CERAMIC CHIP	0.1uF	10%	10V
C3012	1-125-777-11	CERAMIC CHIP	0.1uF	10%	10V
C3013	1-165-908-11	CERAMIC CHIP	1uF	10%	10V
C3014	1-125-777-11	CERAMIC CHIP	0.1uF	10%	10V
C3015	1-165-908-11	CERAMIC CHIP	1uF	10%	10V
C3016	1-165-908-11	CERAMIC CHIP	1uF	10%	10V
C3017	1-165-908-11	CERAMIC CHIP	1uF	10%	10V
C3018	1-164-850-11	CERAMIC CHIP	10PF	0.5PF	50V
C3019	1-164-850-11	CERAMIC CHIP	10PF	0.5PF	50V
C3020	1-164-850-11	CERAMIC CHIP	10PF	0.5PF	50V
C3021	1-164-850-11	CERAMIC CHIP	10PF	0.5PF	50V
C3023	1-125-777-11	CERAMIC CHIP	0.1uF	10%	10V
C3024	1-165-908-11	CERAMIC CHIP	1uF	10%	10V
C3025	1-165-989-11	CERAMIC CHIP	10uF	10%	6.3V
C3026	1-125-777-11	CERAMIC CHIP	0.1uF	10%	10V
C3027	1-125-777-11	CERAMIC CHIP	0.1uF	10%	10V
C3028	1-125-777-11	CERAMIC CHIP	0.1uF	10%	10V
C3029	1-125-777-11	CERAMIC CHIP	0.1uF	10%	10V
C3030	1-165-908-11	CERAMIC CHIP	1uF	10%	10V
C3031	1-165-908-11	CERAMIC CHIP	1uF	10%	10V
C3032	1-165-908-11	CERAMIC CHIP	1uF	10%	10V
C3033	1-125-777-11	CERAMIC CHIP	0.1uF	10%	10V
C3034	1-165-908-11	CERAMIC CHIP	1uF	10%	10V
C3035	1-125-777-11	CERAMIC CHIP	0.1uF	10%	10V
C3036	1-125-777-11	CERAMIC CHIP	0.1uF	10%	10V
C3037	1-125-777-11	CERAMIC CHIP	0.1uF	10%	10V
C3038	1-125-777-11	CERAMIC CHIP	0.1uF	10%	10V
C3039	1-125-777-11	CERAMIC CHIP	0.1uF	10%	10V
C3040	1-125-777-11	CERAMIC CHIP	0.1uF	10%	10V
C3041	1-165-908-11	CERAMIC CHIP	1uF	10%	10V
C3042	1-165-989-11	CERAMIC CHIP	10uF	10%	6.3V
C3043	1-125-777-11	CERAMIC CHIP	0.1uF	10%	10V
C3044	1-125-777-11	CERAMIC CHIP	0.1uF	10%	10V

Ref. No.	Part No.	Description			
C3045	1-125-777-11	CERAMIC CHIP	0.1uF	10%	10V
C3046	1-125-777-11	CERAMIC CHIP	0.1uF	10%	10V
C3047	1-125-777-11	CERAMIC CHIP	0.1uF	10%	10V
C3202	1-125-777-11	CERAMIC CHIP	0.1uF	10%	10V
C3203	1-125-777-11	CERAMIC CHIP	0.1uF	10%	10V
C3204	1-125-777-11	CERAMIC CHIP	0.1uF	10%	10V
C3205	1-125-777-11	CERAMIC CHIP	0.1uF	10%	10V
C3301	1-165-908-11	CERAMIC CHIP	1uF	10%	10V
C3302	1-165-908-11	CERAMIC CHIP	1uF	10%	10V
C3303	1-165-908-11	CERAMIC CHIP	1uF	10%	10V
C3304	1-165-908-11	CERAMIC CHIP	1uF	10%	10V
C3306	1-165-908-11	CERAMIC CHIP	1uF	10%	10V
C3307	1-165-908-11	CERAMIC CHIP	1uF	10%	10V
C3308	1-165-908-11	CERAMIC CHIP	1uF	10%	10V
C3309	1-165-908-11	CERAMIC CHIP	1uF	10%	10V
C3311	1-165-908-11	CERAMIC CHIP	1uF	10%	10V
C3313	1-165-908-11	CERAMIC CHIP	1uF	10%	10V
C3401	1-165-989-11	CERAMIC CHIP	10uF	10%	6.3V
C3402	1-165-884-11	CERAMIC CHIP	2.2uF	10%	6.3V
C3403	1-165-884-11	CERAMIC CHIP	2.2uF	10%	6.3V
C3404	1-165-884-11	CERAMIC CHIP	2.2uF	10%	6.3V
C3405	1-165-884-11	CERAMIC CHIP	2.2uF	10%	6.3V
C3407	1-125-777-11	CERAMIC CHIP	0.1uF	10%	10V
C3408	1-125-777-11	CERAMIC CHIP	0.1uF	10%	10V
C3409	1-125-777-11	CERAMIC CHIP	0.1uF	10%	10V
C3410	1-125-777-11	CERAMIC CHIP	0.1uF	10%	10V
C3411	1-119-750-11	TANTAL. CHIP	22uF	20%	6.3V
C3412	1-119-750-11	TANTAL. CHIP	22uF	20%	6.3V
C3413	1-125-777-11	CERAMIC CHIP	0.1uF	10%	10V
C3414	1-125-777-11	CERAMIC CHIP	0.1uF	10%	10V
C3417	1-125-777-11	CERAMIC CHIP	0.1uF	10%	10V
C3418	1-125-777-11	CERAMIC CHIP	0.1uF	10%	10V
C3419	1-125-777-11	CERAMIC CHIP	0.1uF	10%	10V
C3420	1-125-777-11	CERAMIC CHIP	0.1uF	10%	10V
C3421	1-125-777-11	CERAMIC CHIP	0.1uF	10%	10V
C3422	1-125-777-11	CERAMIC CHIP	0.1uF	10%	10V
C3423	1-125-777-11	CERAMIC CHIP	0.1uF	10%	10V
C3424	1-125-777-11	CERAMIC CHIP	0.1uF	10%	10V
C3425	1-125-777-11	CERAMIC CHIP	0.1uF	10%	10V
C3601	1-165-989-11	CERAMIC CHIP	10uF	10%	6.3V
C3602	1-125-777-11	CERAMIC CHIP	0.1uF	10%	10V
C3603	1-125-777-11	CERAMIC CHIP	0.1uF	10%	10V
C3604	1-125-777-11	CERAMIC CHIP	0.1uF	10%	10V
C3605	1-125-777-11	CERAMIC CHIP	0.1uF	10%	10V
C3701	1-100-611-91	CERAMIC CHIP	22uF	20%	6.3V
C3702	1-125-777-11	CERAMIC CHIP	0.1uF	10%	10V
C4001	1-100-567-81	CERAMIC CHIP	0.01uF	10%	25V
C4002	1-112-717-91	CERAMIC CHIP	1uF	10%	6.3V
C4003	1-165-989-11	CERAMIC CHIP	10uF	10%	6.3V
C4004	1-125-777-11	CERAMIC CHIP	0.1uF	10%	10V
C4005	1-165-989-11	CERAMIC CHIP	10uF	10%	6.3V
C4006	1-125-777-11	CERAMIC CHIP	0.1uF	10%	10V
C4007	1-165-908-11	CERAMIC CHIP	1uF	10%	10V
C4010	1-125-777-11	CERAMIC CHIP	0.1uF	10%	10V
C4011	1-165-989-11	CERAMIC CHIP	10uF	10%	6.3V
C4013	1-165-908-11	CERAMIC CHIP	1uF	10%	10V
C4015	1-165-908-11	CERAMIC CHIP	1uF	10%	10V
C4016	1-165-908-11	CERAMIC CHIP	1uF	10%	10V
C4017	1-100-567-81	CERAMIC CHIP	0.01uF	10%	25V

Ref. No.	Part No.	Description			
C4018	1-112-717-91	CERAMIC CHIP	1uF	10%	6.3V
C4019	1-165-989-11	CERAMIC CHIP	10uF	10%	6.3V
C4020	1-165-989-11	CERAMIC CHIP	10uF	10%	6.3V
C4021	1-100-567-81	CERAMIC CHIP	0.01uF	10%	25V
C4022	1-125-777-11	CERAMIC CHIP	0.1uF	10%	10V
C4023	1-112-717-91	CERAMIC CHIP	1uF	10%	6.3V
C4024	1-165-989-11	CERAMIC CHIP	10uF	10%	6.3V
C4025	1-165-989-11	CERAMIC CHIP	10uF	10%	6.3V
C4026	1-125-777-11	CERAMIC CHIP	0.1uF	10%	10V
C4027	1-165-908-11	CERAMIC CHIP	1uF	10%	10V
C4028	1-165-908-11	CERAMIC CHIP	1uF	10%	10V
C4030	1-165-908-11	CERAMIC CHIP	1uF	10%	10V
C4032	1-125-777-11	CERAMIC CHIP	0.1uF	10%	10V
C4033	1-165-989-11	CERAMIC CHIP	10uF	10%	6.3V
C4036	1-165-908-11	CERAMIC CHIP	1uF	10%	10V
C4037	1-165-989-11	CERAMIC CHIP	10uF	10%	6.3V
C4038	1-125-777-11	CERAMIC CHIP	0.1uF	10%	10V
C4039	1-165-989-11	CERAMIC CHIP	10uF	10%	6.3V
C4040	1-125-777-11	CERAMIC CHIP	0.1uF	10%	10V
C4041	1-112-717-91	CERAMIC CHIP	1uF	10%	6.3V
C4042	1-100-567-81	CERAMIC CHIP	0.01uF	10%	25V
C4043	1-125-777-11	CERAMIC CHIP	0.1uF	10%	10V
C4044	1-164-850-11	CERAMIC CHIP	10PF	0.5PF	50V
C4045	1-164-850-11	CERAMIC CHIP	10PF	0.5PF	50V
C4046	1-164-850-11	CERAMIC CHIP	10PF	0.5PF	50V
C4047	1-164-850-11	CERAMIC CHIP	10PF	0.5PF	50V
C4048	1-125-777-11	CERAMIC CHIP	0.1uF	10%	10V
C4050	1-125-777-11	CERAMIC CHIP	0.1uF	10%	10V
C4051	1-125-777-11	CERAMIC CHIP	0.1uF	10%	10V
C4054	1-125-777-11	CERAMIC CHIP	0.1uF	10%	10V
C4055	1-125-777-11	CERAMIC CHIP	0.1uF	10%	10V
C4056	1-100-567-81	CERAMIC CHIP	0.01uF	10%	25V
C4404	1-165-989-11	CERAMIC CHIP	10uF	10%	6.3V
C4405	1-165-989-11	CERAMIC CHIP	10uF	10%	6.3V
C4406	1-165-989-11	CERAMIC CHIP	10uF	10%	6.3V
C4407	1-165-989-11	CERAMIC CHIP	10uF	10%	6.3V
C4408	1-100-539-91	TANTAL. CHIP	47uF	20%	6.3V
C4409	1-100-539-91	TANTAL. CHIP	47uF	20%	6.3V
C4410	1-125-777-11	CERAMIC CHIP	0.1uF	10%	10V
C4411	1-125-777-11	CERAMIC CHIP	0.1uF	10%	10V
C4414	1-165-989-11	CERAMIC CHIP	10uF	10%	6.3V
C4415	1-112-717-91	CERAMIC CHIP	1uF	10%	6.3V
C4416	1-165-989-11	CERAMIC CHIP	10uF	10%	6.3V
C4418	1-112-717-91	CERAMIC CHIP	1uF	10%	6.3V
C4419	1-165-989-11	CERAMIC CHIP	10uF	10%	6.3V
C4420	1-112-717-91	CERAMIC CHIP	1uF	10%	6.3V
C4421	1-165-989-11	CERAMIC CHIP	10uF	10%	6.3V
C4422	1-112-717-91	CERAMIC CHIP	1uF	10%	6.3V
C4423	1-112-717-91	CERAMIC CHIP	1uF	10%	6.3V
C4424	1-112-717-91	CERAMIC CHIP	1uF	10%	6.3V
C4425	1-112-717-91	CERAMIC CHIP	1uF	10%	6.3V
C4426	1-112-717-91	CERAMIC CHIP	1uF	10%	6.3V
* C4427	1-112-746-11	CERAMIC CHIP	4.7uF	10%	6.3V
* C4428	1-112-746-11	CERAMIC CHIP	4.7uF	10%	6.3V
C4429	1-165-989-11	CERAMIC CHIP	10uF	10%	6.3V
C4430	1-165-989-11	CERAMIC CHIP	10uF	10%	6.3V
C4601	1-165-908-11	CERAMIC CHIP	1uF	10%	10V
C4602	1-165-908-11	CERAMIC CHIP	1uF	10%	10V

Ref. No.	Part No.	Description			
C4604	1-165-989-11	CERAMIC CHIP	10uF	10%	6.3V
C4605	1-100-609-11	TANTAL. CHIP	220uF	20%	5V
C4606	1-165-908-11	CERAMIC CHIP	1uF	10%	10V
C4607	1-165-908-11	CERAMIC CHIP	1uF	10%	10V
C4612	1-165-989-11	CERAMIC CHIP	10uF	10%	6.3V
C4613	1-165-989-11	CERAMIC CHIP	10uF	10%	6.3V
C4614	1-165-989-11	CERAMIC CHIP	10uF	10%	6.3V
C4802	1-165-989-11	CERAMIC CHIP	10uF	10%	6.3V
C4804	1-165-989-11	CERAMIC CHIP	10uF	10%	6.3V
C4805	1-125-777-11	CERAMIC CHIP	0.1uF	10%	10V
C4806	1-125-777-11	CERAMIC CHIP	0.1uF	10%	10V
C4807	1-125-777-11	CERAMIC CHIP	0.1uF	10%	10V
C4808	1-125-777-11	CERAMIC CHIP	0.1uF	10%	10V
C4809	1-127-715-11	CERAMIC CHIP	0.22uF	10%	16V
C4810	1-127-715-11	CERAMIC CHIP	0.22uF	10%	16V
C4811	1-100-567-81	CERAMIC CHIP	0.01uF	10%	25V
C5005	1-165-875-11	CERAMIC CHIP	10uF	10%	10V
C5007	1-165-875-11	CERAMIC CHIP	10uF	10%	10V
C5008	1-165-875-11	CERAMIC CHIP	10uF	10%	10V
C5009	1-165-875-11	CERAMIC CHIP	10uF	10%	10V
C5010	1-165-875-11	CERAMIC CHIP	10uF	10%	10V
C5011	1-165-875-11	CERAMIC CHIP	10uF	10%	10V
C5012	1-165-908-11	CERAMIC CHIP	1uF	10%	10V
C5201	1-165-989-11	CERAMIC CHIP	10uF	10%	6.3V
C5202	1-127-715-11	CERAMIC CHIP	0.22uF	10%	16V
C5204	1-125-777-11	CERAMIC CHIP	0.1uF	10%	10V
C5205	1-125-777-11	CERAMIC CHIP	0.1uF	10%	10V
C5206	1-125-777-11	CERAMIC CHIP	0.1uF	10%	10V
C5208	1-125-777-11	CERAMIC CHIP	0.1uF	10%	10V
C5210	1-100-966-91	CERAMIC CHIP	10uF	20%	10V
C5211	1-125-777-11	CERAMIC CHIP	0.1uF	10%	10V
C5212	1-165-908-11	CERAMIC CHIP	1uF	10%	10V
C5213	1-125-777-11	CERAMIC CHIP	0.1uF	10%	10V
C5214	1-125-777-11	CERAMIC CHIP	0.1uF	10%	10V
* C5215	1-112-298-91	CERAMIC CHIP	1uF	10%	16V
* C5216	1-112-746-11	CERAMIC CHIP	4.7uF	10%	6.3V
C5217	1-165-908-11	CERAMIC CHIP	1uF	10%	10V
C5218	1-107-823-11	CERAMIC CHIP	0.47uF	10%	16V
C5219	1-164-935-11	CERAMIC CHIP	470PF	10%	50V
C5220	1-164-937-11	CERAMIC CHIP	0.001uF	10%	50V
C5221	1-100-567-81	CERAMIC CHIP	0.01uF	10%	25V
C5222	1-165-908-11	CERAMIC CHIP	1uF	10%	10V
C5223	1-165-908-11	CERAMIC CHIP	1uF	10%	10V
C5224	1-165-908-11	CERAMIC CHIP	1uF	10%	10V
C5225	1-165-908-11	CERAMIC CHIP	1uF	10%	10V
C5226	1-165-908-11	CERAMIC CHIP	1uF	10%	10V
C5227	1-165-908-11	CERAMIC CHIP	1uF	10%	10V
C5228	1-165-908-11	CERAMIC CHIP	1uF	10%	10V
C5229	1-165-908-11	CERAMIC CHIP	1uF	10%	10V
C5230	1-137-988-91	CERAMIC CHIP	1uF	10%	35V
C5231	1-165-989-11	CERAMIC CHIP	10uF	10%	6.3V
C5232	1-165-989-11	CERAMIC CHIP	10uF	10%	6.3V
C5233	1-165-989-11	CERAMIC CHIP	10uF	10%	6.3V
C5234	1-165-989-11	CERAMIC CHIP	10uF	10%	6.3V
C5235	1-165-989-11	CERAMIC CHIP	10uF	10%	6.3V
C5236	1-165-875-11	CERAMIC CHIP	10uF	10%	10V
C5237	1-165-875-11	CERAMIC CHIP	10uF	10%	10V
C5238	1-137-988-91	CERAMIC CHIP	1uF	10%	35V

Ref. No.	Part No.	Description			
C5240	1-165-989-11	CERAMIC CHIP	10uF	10%	6.3V
C5241	1-165-989-11	CERAMIC CHIP	10uF	10%	6.3V
C5243	1-165-989-11	CERAMIC CHIP	10uF	10%	6.3V
C5244	1-165-989-11	CERAMIC CHIP	10uF	10%	6.3V
C5247	1-165-989-11	CERAMIC CHIP	10uF	10%	6.3V
C5249	1-100-611-91	CERAMIC CHIP	22uF	20%	6.3V
C5251	1-165-989-11	CERAMIC CHIP	10uF	10%	6.3V
C5253	1-165-989-11	CERAMIC CHIP	10uF	10%	6.3V
C5254	1-165-989-11	CERAMIC CHIP	10uF	10%	6.3V
C5256	1-100-597-91	CERAMIC CHIP	0.1uF	10%	25V
C5401	1-119-750-11	TANTAL. CHIP	22uF	20%	6.3V
C5404	1-100-567-81	CERAMIC CHIP	0.01uF	10%	25V
C5405	1-125-777-11	CERAMIC CHIP	0.1uF	10%	10V
C5406	1-125-777-11	CERAMIC CHIP	0.1uF	10%	10V
C5408	1-125-777-11	CERAMIC CHIP	0.1uF	10%	10V
C5409	1-100-567-81	CERAMIC CHIP	0.01uF	10%	25V
C5411	1-125-777-11	CERAMIC CHIP	0.1uF	10%	10V
C5412	1-100-567-81	CERAMIC CHIP	0.01uF	10%	25V
C5413	1-125-777-11	CERAMIC CHIP	0.1uF	10%	10V
C5414	1-164-850-11	CERAMIC CHIP	10PF	0.5PF	50V
C5415	1-164-850-11	CERAMIC CHIP	10PF	0.5PF	50V
C5416	1-125-777-11	CERAMIC CHIP	0.1uF	10%	10V
C5601	1-100-567-81	CERAMIC CHIP	0.01uF	10%	25V
C5604	1-164-850-11	CERAMIC CHIP	10PF	0.5PF	50V
C5605	1-164-850-11	CERAMIC CHIP	10PF	0.5PF	50V
C5606	1-125-777-11	CERAMIC CHIP	0.1uF	10%	10V
C5607	1-125-777-11	CERAMIC CHIP	0.1uF	10%	10V
C5608	1-125-777-11	CERAMIC CHIP	0.1uF	10%	10V
C5609	1-100-567-81	CERAMIC CHIP	0.01uF	10%	25V
C5610	1-100-567-81	CERAMIC CHIP	0.01uF	10%	25V
C5611	1-125-777-11	CERAMIC CHIP	0.1uF	10%	10V
C5612	1-125-777-11	CERAMIC CHIP	0.1uF	10%	10V
C5613	1-125-777-11	CERAMIC CHIP	0.1uF	10%	10V
C5614	1-165-908-11	CERAMIC CHIP	1uF	10%	10V
C5615	1-165-908-11	CERAMIC CHIP	1uF	10%	10V
C5617	1-100-567-81	CERAMIC CHIP	0.01uF	10%	25V
C5618	1-100-567-81	CERAMIC CHIP	0.01uF	10%	25V
C6004	1-164-939-11	CERAMIC CHIP	0.0022uF	10%	50V
C6005	1-125-777-11	CERAMIC CHIP	0.1uF	10%	10V
C6006	1-164-939-11	CERAMIC CHIP	0.0022uF	10%	50V
C6007	1-125-777-11	CERAMIC CHIP	0.1uF	10%	10V
C6008	1-125-777-11	CERAMIC CHIP	0.1uF	10%	10V
C6009	1-125-777-11	CERAMIC CHIP	0.1uF	10%	10V
C6010	1-125-777-11	CERAMIC CHIP	0.1uF	10%	10V
C6011	1-125-777-11	CERAMIC CHIP	0.1uF	10%	10V
C6013	1-164-939-11	CERAMIC CHIP	0.0022uF	10%	50V
C6014	1-164-939-11	CERAMIC CHIP	0.0022uF	10%	50V
C6015	1-119-750-11	TANTAL. CHIP	22uF	20%	6.3V
C6016	1-165-908-11	CERAMIC CHIP	1uF	10%	10V
C6203	1-164-939-11	CERAMIC CHIP	0.0022uF	10%	50V
C6204	1-125-777-11	CERAMIC CHIP	0.1uF	10%	10V
C6205	1-164-939-11	CERAMIC CHIP	0.0022uF	10%	50V
C6206	1-125-777-11	CERAMIC CHIP	0.1uF	10%	10V
C6207	1-125-777-11	CERAMIC CHIP	0.1uF	10%	10V
C6208	1-125-777-11	CERAMIC CHIP	0.1uF	10%	10V
C6209	1-125-777-11	CERAMIC CHIP	0.1uF	10%	10V
C6210	1-125-777-11	CERAMIC CHIP	0.1uF	10%	10V
C6212	1-164-939-11	CERAMIC CHIP	0.0022uF	10%	50V
C6213	1-164-939-11	CERAMIC CHIP	0.0022uF	10%	50V

Ref. No.	Part No.	Description			
C6214	1-119-750-11	TANTAL. CHIP	22uF	20%	6.3V
C6215	1-165-908-11	CERAMIC CHIP	1uF	10%	10V
C6403	1-100-567-81	CERAMIC CHIP	0.01uF	10%	25V
C6404	1-100-567-81	CERAMIC CHIP	0.01uF	10%	25V
C6405	1-165-908-11	CERAMIC CHIP	1uF	10%	10V
C6406	1-165-908-11	CERAMIC CHIP	1uF	10%	10V
C6407	1-100-567-81	CERAMIC CHIP	0.01uF	10%	25V
C6408	1-100-567-81	CERAMIC CHIP	0.01uF	10%	25V
C6409	1-164-937-11	CERAMIC CHIP	0.001uF	10%	50V
C6411	1-164-937-11	CERAMIC CHIP	0.001uF	10%	50V
C6414	1-100-597-91	CERAMIC CHIP	0.1uF	10%	25V
C6415	1-125-777-11	CERAMIC CHIP	0.1uF	10%	10V
C6416	1-125-777-11	CERAMIC CHIP	0.1uF	10%	10V
C6417	1-125-777-11	CERAMIC CHIP	0.1uF	10%	10V
C6418	1-137-934-91	TANTAL. CHIP	47uF	20%	10V
C6419	1-119-750-11	TANTAL. CHIP	22uF	20%	6.3V
C6420	1-125-777-11	CERAMIC CHIP	0.1uF	10%	10V
C6421	1-125-777-11	CERAMIC CHIP	0.1uF	10%	10V
C6422	1-125-777-11	CERAMIC CHIP	0.1uF	10%	10V
C6423	1-125-777-11	CERAMIC CHIP	0.1uF	10%	10V
C6601	1-164-937-11	CERAMIC CHIP	0.001uF	10%	50V
C6602	1-164-937-11	CERAMIC CHIP	0.001uF	10%	50V
C6603	1-164-937-11	CERAMIC CHIP	0.001uF	10%	50V
C6604	1-164-937-11	CERAMIC CHIP	0.001uF	10%	50V
C6607	1-112-717-91	CERAMIC CHIP	1uF	10%	6.3V
C6609	1-100-597-91	CERAMIC CHIP	0.1uF	10%	25V
C6610	1-125-777-11	CERAMIC CHIP	0.1uF	10%	10V
C6611	1-125-891-11	CERAMIC CHIP	0.47uF	10%	10V
C6612	1-165-908-11	CERAMIC CHIP	1uF	10%	10V
C8001	1-164-227-11	CERAMIC CHIP	0.022uF	10%	25V
C8002	1-135-149-21	TANTAL. CHIP	2.2uF	20%	10V
C8003	1-165-989-11	CERAMIC CHIP	10uF	10%	6.3V
C8004	1-127-715-11	CERAMIC CHIP	0.22uF	10%	16V
C8005	1-127-715-11	CERAMIC CHIP	0.22uF	10%	16V
C8006	1-100-597-91	CERAMIC CHIP	0.1uF	10%	25V
C8007	1-165-989-11	CERAMIC CHIP	10uF	10%	6.3V
C8008	1-127-715-11	CERAMIC CHIP	0.22uF	10%	16V
C8009	1-127-715-11	CERAMIC CHIP	0.22uF	10%	16V
C8010	1-100-597-91	CERAMIC CHIP	0.1uF	10%	25V
C8011	1-165-989-11	CERAMIC CHIP	10uF	10%	6.3V
C8012	1-100-597-91	CERAMIC CHIP	0.1uF	10%	25V
C8013	1-165-989-11	CERAMIC CHIP	10uF	10%	6.3V
C8014	1-165-989-11	CERAMIC CHIP	10uF	10%	6.3V
C8015	1-165-989-11	CERAMIC CHIP	10uF	10%	6.3V
C8016	1-117-919-11	TANTAL. CHIP	10uF	20%	6.3V
C8017	1-113-981-11	TANTAL. CHIP	22uF	20%	20V
C8018	1-100-597-91	CERAMIC CHIP	0.1uF	10%	25V
C8019	1-165-875-11	CERAMIC CHIP	10uF	10%	10V
C8020	1-114-238-91	CERAMIC CHIP	22uF	20%	10V
C8021	1-114-238-91	CERAMIC CHIP	22uF	20%	10V
C8022	1-100-597-91	CERAMIC CHIP	0.1uF	10%	25V
C8023	1-165-908-11	CERAMIC CHIP	1uF	10%	10V
C8024	1-165-908-11	CERAMIC CHIP	1uF	10%	10V
C8025	1-100-597-91	CERAMIC CHIP	0.1uF	10%	25V
C8026	1-165-989-11	CERAMIC CHIP	10uF	10%	6.3V
C8027	1-125-777-11	CERAMIC CHIP	0.1uF	10%	10V
C8028	1-100-597-91	CERAMIC CHIP	0.1uF	10%	25V
C8029	1-137-934-91	TANTAL. CHIP	47uF	20%	10V

Ref. No.	Part No.	Description			
C8030	1-165-908-11	CERAMIC CHIP	1uF	10%	10V
C8031	1-165-908-11	CERAMIC CHIP	1uF	10%	10V
C8032	1-165-897-11	TANTAL. CHIP	22uF	20%	10V
C8033	1-112-300-91	CERAMIC CHIP	4.7uF	10%	10V
C8034	1-114-238-91	CERAMIC CHIP	22uF	20%	10V
C8035	1-114-238-91	CERAMIC CHIP	22uF	20%	10V
C8036	1-112-300-91	CERAMIC CHIP	4.7uF	10%	10V
C8037	1-100-597-91	CERAMIC CHIP	0.1uF	10%	25V
C8038	1-137-934-91	TANTAL. CHIP	47uF	20%	10V
C8039	1-100-597-91	CERAMIC CHIP	0.1uF	10%	25V
C8040	1-162-977-11	CERAMIC CHIP	0.0018uF	10%	50V
C8041	1-165-989-11	CERAMIC CHIP	10uF	10%	6.3V
C8042	1-100-611-91	CERAMIC CHIP	22uF	20%	6.3V
C8043	1-164-933-11	CERAMIC CHIP	220PF	10%	50V
C8044	1-100-597-91	CERAMIC CHIP	0.1uF	10%	25V
C8045	1-112-300-91	CERAMIC CHIP	4.7uF	10%	10V
C8046	1-100-567-81	CERAMIC CHIP	0.01uF	10%	25V
C8047	1-100-611-91	CERAMIC CHIP	22uF	20%	6.3V
C8048	1-165-989-11	CERAMIC CHIP	10uF	10%	6.3V
C8049	1-112-300-91	CERAMIC CHIP	4.7uF	10%	10V
C8050	1-164-933-11	CERAMIC CHIP	220PF	10%	50V
C8051	1-165-875-11	CERAMIC CHIP	10uF	10%	10V
C8052	1-100-611-91	CERAMIC CHIP	22uF	20%	6.3V
C8053	1-137-934-91	TANTAL. CHIP	47uF	20%	10V
C8054	1-137-934-91	TANTAL. CHIP	47uF	20%	10V
C8055	1-117-919-11	TANTAL. CHIP	10uF	20%	6.3V
C8056	1-162-977-11	CERAMIC CHIP	0.0018uF	10%	50V
C8057	1-165-989-11	CERAMIC CHIP	10uF	10%	6.3V
C8058	1-100-567-81	CERAMIC CHIP	0.01uF	10%	25V
C8059	1-137-934-91	TANTAL. CHIP	47uF	20%	10V
C8060	1-100-597-91	CERAMIC CHIP	0.1uF	10%	25V
C8061	1-165-875-11	CERAMIC CHIP	10uF	10%	10V
C8062	1-128-964-91	TANTAL. CHIP	100uF	20%	6.3V
C8063	1-125-889-11	CERAMIC CHIP	2.2uF	10%	10V
C8064	1-165-989-11	CERAMIC CHIP	10uF	10%	6.3V
C8065	1-100-597-91	CERAMIC CHIP	0.1uF	10%	25V
C8066	1-165-884-11	CERAMIC CHIP	2.2uF	10%	6.3V
C8067	1-128-964-91	TANTAL. CHIP	100uF	20%	6.3V
C8068	1-125-891-11	CERAMIC CHIP	0.47uF	10%	10V
C8069	1-165-908-11	CERAMIC CHIP	1uF	10%	10V
C8070	1-125-891-11	CERAMIC CHIP	0.47uF	10%	10V
C8071	1-165-908-11	CERAMIC CHIP	1uF	10%	10V
C8073	1-112-300-91	CERAMIC CHIP	4.7uF	10%	10V
C8074	1-112-300-91	CERAMIC CHIP	4.7uF	10%	10V
C8075	1-112-300-91	CERAMIC CHIP	4.7uF	10%	10V
C8076	1-112-300-91	CERAMIC CHIP	4.7uF	10%	10V
C8077	1-112-300-91	CERAMIC CHIP	4.7uF	10%	10V
C8078	1-165-989-11	CERAMIC CHIP	10uF	10%	6.3V
C8080	1-165-875-11	CERAMIC CHIP	10uF	10%	10V
C8081	1-165-875-11	CERAMIC CHIP	10uF	10%	10V
C8084	1-165-989-11	CERAMIC CHIP	10uF	10%	6.3V
C8085	1-164-935-11	CERAMIC CHIP	470PF	10%	50V
C8088	1-164-935-11	CERAMIC CHIP	470PF	10%	50V
C8089	1-164-382-11	CERAMIC CHIP	91PF	5%	50V
C8090	1-164-936-11	CERAMIC CHIP	680PF	10%	50V
C8091	1-164-936-11	CERAMIC CHIP	680PF	10%	50V
C8092	1-164-382-11	CERAMIC CHIP	91PF	5%	50V
C8095	1-164-382-11	CERAMIC CHIP	91PF	5%	50V

Ref. No.	Part No.	Description			
C8096	1-164-382-11	CERAMIC CHIP	91PF	5%	50V
C8097	1-100-597-91	CERAMIC CHIP	0.1uF	10%	25V
C8098	1-165-989-11	CERAMIC CHIP	10uF	10%	6.3V
C8099	1-165-989-11	CERAMIC CHIP	10uF	10%	6.3V
C8100	1-165-989-11	CERAMIC CHIP	10uF	10%	6.3V
C8101	1-165-875-11	CERAMIC CHIP	10uF	10%	10V
C8102	1-117-919-11	TANTAL. CHIP	10uF	20%	6.3V
C8103	1-165-875-11	CERAMIC CHIP	10uF	10%	10V
C8104	1-165-989-11	CERAMIC CHIP	10uF	10%	6.3V
C8105	1-100-597-91	CERAMIC CHIP	0.1uF	10%	25V
C8106	1-164-858-11	CERAMIC CHIP	22PF	5%	50V
C8107	1-164-858-11	CERAMIC CHIP	22PF	5%	50V
C8108	1-100-597-91	CERAMIC CHIP	0.1uF	10%	25V
C8109	1-137-934-91	TANTAL. CHIP	47uF	20%	10V
C8111	1-165-908-11	CERAMIC CHIP	1uF	10%	10V
C8112	1-164-937-11	CERAMIC CHIP	0.001uF	10%	50V
C8113	1-164-874-11	CERAMIC CHIP	100PF	5%	50V
C8114	1-165-908-11	CERAMIC CHIP	1uF	10%	10V
C8407	1-127-715-11	CERAMIC CHIP	0.22uF	10%	16V
* C8410	1-112-298-91	CERAMIC CHIP	1uF	10%	16V
C8412	1-127-820-11	CERAMIC CHIP	4.7uF	10%	16V
C8414	1-112-300-91	CERAMIC CHIP	4.7uF	10%	10V
C8417	1-125-891-11	CERAMIC CHIP	0.47uF	10%	10V
C8419	1-100-581-81	CERAMIC CHIP	0.0047uF	10%	50V
C8420	1-164-937-11	CERAMIC CHIP	0.001uF	10%	50V
C8421	1-127-820-11	CERAMIC CHIP	4.7uF	10%	16V
C8422	1-100-597-91	CERAMIC CHIP	0.1uF	10%	25V
C8423	1-127-692-11	CERAMIC CHIP	10uF	10%	16V
C8424	1-164-937-11	CERAMIC CHIP	0.001uF	10%	50V

< CONNECTOR >

CN1001	1-817-920-11	CONNECTOR, FPC (ZIF) 80P
* CN1002	1-816-647-61	FFC/FPC CONNECTOR (LIF) 18P
* CN1003	1-821-501-11	CONNECTOR, FPC (ZIF) 51P
* CN1004	1-817-560-71	CONNECTOR, FPC (ZIP) 21P
CN1005	1-819-780-61	CONNECTOR, FPC (ZIF) 27P
CN1006	1-817-920-11	CONNECTOR, FPC (ZIF) 80P
* CN1008	1-816-648-51	FFC/CONNECTOR, FPC (LIF) 20P
* CN1010	1-816-648-51	FFC/CONNECTOR, FPC (LIF) 20P
CN1011	1-816-654-61	FFC/FPC CONNECTOR (LIF) 6P
* CN1012	1-817-283-71	CONNECTOR, FPC (ZIF) 51P
* CN1201	1-822-221-11	CONNECTOR, COAXIAL (RECEPTACLE)
* CN1202	1-822-221-11	CONNECTOR, COAXIAL (RECEPTACLE)
* CN1203	1-822-221-11	CONNECTOR, COAXIAL (RECEPTACLE)
CN4402	(Not supplied)	CONNECTOR, COAXIAL
(CN4402 is supplied included in VC-582 complete board (service).)		
* CN4801	1-816-648-51	FFC/CONNECTOR, FPC (LIF) 20P
CN5002	1-580-057-11	PIN, CONNECTOR (SMD) 4P
* CN6601	1-819-873-61	CONNECTOR, FPC (ZIF) 21P
* CN6602	1-817-283-71	CONNECTOR, FPC (ZIF) 51P
* CN6603	1-816-643-51	FFC/FPC CONNECTOR (LIF) 10P

< DIODE >

D2001	8-719-056-23	DIODE MA2S111-(K8).SO
D2002	8-719-056-23	DIODE MA2S111-(K8).SO
D2003	8-719-056-23	DIODE MA2S111-(K8).SO
D2301	8-719-056-23	DIODE MA2S111-(K8).SO
* D2801	6-501-704-01	DIODE RB886CST2R
* D2802	6-501-704-01	DIODE RB886CST2R

Ref. No.	Part No.	Description
* D3001	6-502-947-01	DIODE RB751CS-40T2R
* D3002	6-502-947-01	DIODE RB751CS-40T2R
* D3003	6-502-947-01	DIODE RB751CS-40T2R
* D3004	6-502-947-01	DIODE RB751CS-40T2R
* D3005	6-502-947-01	DIODE RB751CS-40T2R
* D3006	6-502-947-01	DIODE RB751CS-40T2R
* D3007	6-502-947-01	DIODE RB751CS-40T2R
* D3008	6-502-947-01	DIODE RB751CS-40T2R
* D3009	6-502-947-01	DIODE RB751CS-40T2R
D3010	8-719-421-67	DIODE MA132WK
D3012	8-719-421-67	DIODE MA132WK
D4001	8-719-421-67	DIODE MA132WK
D4003	8-719-421-67	DIODE MA132WK
D4802	6-502-150-01	DIODE MA2SD320G8S0
D4803	6-502-150-01	DIODE MA2SD320G8S0
D5005	8-719-421-67	DIODE MA132WK
D5008	8-719-074-67	DIODE EDZFJ-TE61-5.6B
D5009	8-719-074-67	DIODE EDZFJ-TE61-5.6B
D5401	8-719-421-71	DIODE 1SS361-TE85L
D5402	8-719-421-71	DIODE 1SS361-TE85L
D8401	8-719-074-08	DIODE MA4ZD03001S0
		< FUSE >
*⚠F001	1-523-038-31	FUSE (0.25A/24V)
*⚠F002	1-523-038-31	FUSE (0.25A/24V)
*⚠F003	1-576-286-31	FUSE (1.4A/24V)
*⚠F004	1-576-286-31	FUSE (1.4A/24V)
*⚠F005	1-576-286-31	FUSE (1.4A/24V)
*⚠F006	1-576-286-31	FUSE (1.4A/24V)
*⚠F007	1-576-286-31	FUSE (1.4A/24V)
*⚠F008	1-576-286-31	FUSE (1.4A/24V)
		< FERRITE BEAD >
FB001	1-469-581-21	INDUCTOR, FERRITE BEAD (1005)
* FB1401	1-481-300-11	INDUCTOR, FERRITE BEAD
* FB1402	1-481-300-11	INDUCTOR, FERRITE BEAD
* FB1403	1-481-300-11	INDUCTOR, FERRITE BEAD
* FB1404	1-481-250-11	INDUCTOR, FERRITE BEAD (1005)
FB1405	1-400-620-21	INDUCTOR, FERRITE BEAD (1005)
* FB1601	1-481-300-11	INDUCTOR, FERRITE BEAD
FB2301	1-400-354-11	INDUCTOR, FERRITE BEAD (1005)
* FB2302	1-481-250-11	INDUCTOR, FERRITE BEAD (1005)
* FB2303	1-481-250-11	INDUCTOR, FERRITE BEAD (1005)
FB2801	1-400-331-11	FERRITE, EMI (SMD) (1005)
* FB4401	1-481-300-11	INDUCTOR, FERRITE BEAD
* FB4402	1-481-300-11	INDUCTOR, FERRITE BEAD
* FB4403	1-481-300-11	INDUCTOR, FERRITE BEAD
* FB4404	1-481-300-11	INDUCTOR, FERRITE BEAD
* FB4405	1-481-300-11	INDUCTOR, FERRITE BEAD
* FB4406	1-481-300-11	INDUCTOR, FERRITE BEAD
* FB5602	1-481-300-11	INDUCTOR, FERRITE BEAD
		< FILTER >
FL3401	1-234-939-21	FILTER, EMI REMOVAL (SMD)
FL3402	1-234-939-21	FILTER, EMI REMOVAL (SMD)
		< IC >
* IC1001	6-711-739-01	IC TC7WG126FK

Ref. No.	Part No.	Description
IC1002	6-703-953-01	IC TK11134CSCL-G
IC1204	6-703-976-01	IC R1114Q181D-TR-FA
IC1205	6-703-976-01	IC R1114Q181D-TR-FA
IC1206	6-703-976-01	IC R1114Q181D-TR-FA
IC1207	6-703-976-01	IC R1114Q181D-TR-FA
IC1208	6-703-977-01	IC R1114Q331D-TR-FA
IC1209	6-703-977-01	IC R1114Q331D-TR-FA
* IC1401	6-710-308-01	IC CXD9891GG
* IC1403	6-708-444-01	IC R1114Q281D-TR-FA
IC1407	6-706-484-01	IC TC7SH04FU (T5RSOYJF)
IC1408	6-701-979-01	IC TC7WB66FK (TE85R)
IC1409	6-714-136-01	IC TC7SG125FU (T5RSY, F)
IC1410	6-714-136-01	IC TC7SG125FU (T5RSY, F)
* IC1601	6-713-564-01	IC IS42SM32160C-7BLI-TR U907A
IC2001	(Not supplied)	IC BCX255102A
(IC2001 is supplied included in VC-582 complete board (service).)		
IC2002	6-708-511-01	IC TC7SG08AFS
IC2302	6-712-850-01	IC TC7SP3125TU (5RSO, F
IC2601	(Not supplied)	IC K5R1G13ACD-AK60T
(IC2601 is supplied included in VC-582 complete board (service).)		
* IC2801	6-707-959-01	IC AN12920AAVB
IC2803	6-710-786-01	IC TC7SH125FU (T5RSOYF
IC2804	6-710-786-01	IC TC7SH125FU (T5RSOYF
* IC2806	6-712-910-01	IC NJM2878F4-46 (TE2)
* IC2807	6-714-540-01	IC MAX9654AUB+T
* IC2808	6-714-525-01	IC BH7606GU
* IC2809	6-712-135-01	IC R1173H001D-T1-F
* IC3001	6-714-362-01	IC EP3C16U256C8N
IC3002	6-700-217-01	IC TC7SZ14FU (TE85R)
IC3003	6-707-886-01	IC TC74VHCT125AFT (EKJ)
IC3004	6-710-786-01	IC TC7SH125FU (T5RSOYF
IC3005	6-710-786-01	IC TC7SH125FU (T5RSOYF
* IC3006	6-714-750-01	IC HD74LV1GT125AVSE
* IC3007	6-808-742-01	IC EPCS4SI8N (15)-BZ01
* IC3201	6-714-015-01	IC K4X56323PL-8GC6T
* IC3301	6-708-464-01	IC R1114Q251D-TR-FA
IC3302	6-705-606-01	IC R1114Q301D-TR-FA
IC3303	6-703-977-01	IC R1114Q331D-TR-FA
IC3304	6-703-977-01	IC R1114Q331D-TR-FA
IC3306	6-703-976-01	IC R1114Q181D-TR-FA
* IC3401	8-753-335-26	IC CXD4113GG-T6
* IC3601	6-714-780-01	IC K4X51323PG-8GC6T
* IC3701	6-712-050-01	IC SN65LVDS301ZQER
* IC4001	6-714-362-01	IC EP3C16U256C8N
* IC4002	6-808-743-01	IC EPCS4SI8N (15)-ST01
IC4003	6-714-136-01	IC TC7SG125FU (T5RSY, F)
IC4005	6-710-786-01	IC TC7SH125FU (T5RSOYF
IC4007	6-710-786-01	IC TC7SH125FU (T5RSOYF
IC4008	8-759-524-04	IC TC74VHC125FT (EL)
IC4009	6-710-786-01	IC TC7SH125FU (T5RSOYF
* IC4403	6-712-135-01	IC R1173H001D-T1-F
* IC4404	6-712-135-01	IC R1173H001D-T1-F
* IC4405	6-712-905-01	IC GS1572-IBE3
IC4601	6-703-976-01	IC R1114Q181D-TR-FA
* IC4602	6-708-464-01	IC R1114Q251D-TR-FA
* IC4801	6-713-468-01	IC ADV7521NKBCBZRL-80
IC4802	6-705-337-01	IC TK11150CSCL-G
* IC5201	6-808-414-01	IC MB44C017ABGF-G-ERE1
* IC5401	6-714-858-01	IC MB95005ABGL-G-125-ERE1

Ref. No.	Part No.	Description
* IC5601	6-714-950-01	IC MB91195ABGL-G-270-ERE1
* IC5602	6-706-013-01	IC AK6514CF-E2
IC5603	6-704-974-01	IC AK6512CAS-E2
* IC6002	6-808-503-01	IC BU24130GU-E2
* IC6201	6-808-503-01	IC BU24130GU-E2
* IC6401	6-713-274-01	IC R2J30502LG
* IC6601	6-712-910-01	IC NJM2878F4-46 (TE2)
* IC6602	6-708-444-01	IC R1114Q281D-TR-FA
IC8001	6-707-104-01	IC NJM2761RB2 (TE2)
IC8002	6-702-527-01	IC AK5380VT-E2
* IC8003	6-713-574-01	IC R2A15219FP
IC8004	6-704-682-01	IC AK4384VT-E2
* IC8005	6-708-446-01	IC R1114Q311D-TR-FA
IC8006	6-707-616-01	IC AK4386VT-E2
IC8007	6-707-879-01	IC TC74VHC541FT (EKJ)
IC8008	6-707-208-01	IC TK11100CSCB-G
* IC8403	6-712-910-01	IC NJM2878F4-46 (TE2)
IC8405	6-709-933-01	IC XC9103D093MR
		< COIL >
* L1401	1-481-425-21	INDUCTOR 10uH
* L1402	1-481-425-21	INDUCTOR 10uH
* L1403	1-481-425-21	INDUCTOR 10uH
L1408	1-400-353-21	INDUCTOR 22uH
* L2001	1-481-425-21	INDUCTOR 10uH
* L2003	1-481-425-21	INDUCTOR 10uH
* L2004	1-481-425-21	INDUCTOR 10uH
* L2005	1-481-425-21	INDUCTOR 10uH
* L2006	1-481-425-21	INDUCTOR 10uH
* L2007	1-481-425-21	INDUCTOR 10uH
* L2008	1-481-425-21	INDUCTOR 10uH
* L2009	1-481-425-21	INDUCTOR 10uH
* L2803	1-481-425-21	INDUCTOR 10uH
* L2808	1-481-425-21	INDUCTOR 10uH
L3001	1-469-553-21	INDUCTOR 4.7uH
* L3002	1-400-672-11	INDUCTOR 1uH
* L3003	1-400-672-11	INDUCTOR 1uH
* L3004	1-481-102-21	INDUCTOR 10uH
* L3701	1-481-425-21	INDUCTOR 10uH
L4401	1-414-836-21	INDUCTOR 4.7nH
L4402	1-414-836-21	INDUCTOR 4.7nH
L4601	1-469-553-21	INDUCTOR 4.7uH
* L4602	1-400-672-11	INDUCTOR 1uH
* L4603	1-481-102-21	INDUCTOR 10uH
* L4802	1-481-425-21	INDUCTOR 10uH
* L4804	1-481-425-21	INDUCTOR 10uH
L5202	1-456-135-11	INDUCTOR 4.7uH
L5203	1-419-630-21	INDUCTOR 4.7uH
L5204	1-456-135-11	INDUCTOR 4.7uH
L5205	1-456-135-11	INDUCTOR 4.7uH
L5206	1-456-135-11	INDUCTOR 4.7uH
L5207	1-456-135-11	INDUCTOR 4.7uH
L5208	1-456-135-11	INDUCTOR 4.7uH
L5210	1-469-553-21	INDUCTOR 4.7uH
* L5211	1-400-411-21	INDUCTOR 4.7uH
L5212	1-469-553-21	INDUCTOR 4.7uH
* L5213	1-481-425-21	INDUCTOR 10uH
L5214	1-469-553-21	INDUCTOR 4.7uH

Ref. No.	Part No.	Description
* L5216	1-457-647-11	INDUCTOR 100uH
L6002	1-469-967-21	INDUCTOR 10uH
L6202	1-469-967-21	INDUCTOR 10uH
L6401	1-469-967-21	INDUCTOR 10uH
* L6601	1-481-425-21	INDUCTOR 10uH
* L8001	1-481-425-21	INDUCTOR 10uH
* L8002	1-481-425-21	INDUCTOR 10uH
L8003	1-400-353-21	INDUCTOR 22uH
* L8004	1-481-425-21	INDUCTOR 10uH
* L8005	1-481-425-21	INDUCTOR 10uH
L8006	1-469-967-21	INDUCTOR 10uH
* L8007	1-481-425-21	INDUCTOR 10uH
L8008	1-456-138-11	INDUCTOR 33uH
L8009	1-456-138-11	INDUCTOR 33uH
* L8010	1-481-425-21	INDUCTOR 10uH
L8401	1-416-670-51	INDUCTOR 33uH
L8402	1-456-499-11	INDUCTOR 4.7uH
		< FILTER >
LF4801	1-457-223-11	COMMON MODE CHOKE COIL
LF4802	1-457-223-11	COMMON MODE CHOKE COIL
LF4803	1-457-223-11	COMMON MODE CHOKE COIL
LF4804	1-457-223-11	COMMON MODE CHOKE COIL
		< TRANSISTOR >
Q1001	6-551-631-01	TRANSISTOR RN1104MFV (TL3SONY)
* Q2001	6-551-623-01	TRANSISTOR 2SA2154MFV (TL3SONY)
* Q2002	6-551-623-01	TRANSISTOR 2SA2154MFV (TL3SONY)
* Q2003	6-551-623-01	TRANSISTOR 2SA2154MFV (TL3SONY)
* Q2004	6-551-623-01	TRANSISTOR 2SA2154MFV (TL3SONY)
* Q2005	6-551-623-01	TRANSISTOR 2SA2154MFV (TL3SONY)
* Q2006	6-551-623-01	TRANSISTOR 2SA2154MFV (TL3SONY)
* Q2007	6-551-771-01	TRANSISTOR UNR31AFG0LS0
Q2008	6-551-622-01	TRANSISTOR 2SC6026MFV (TL3SONY)
* Q4001	6-551-623-01	TRANSISTOR 2SA2154MFV (TL3SONY)
Q4802	6-550-179-01	TRANSISTOR RN4904FE (TPLR3)
* Q5003	6-552-123-01	TRANSISTOR ECH8652-S-TL-H
Q5004	6-551-631-01	TRANSISTOR RN1104MFV (TL3SONY)
Q5005	6-551-184-01	TRANSISTOR MCH6305-TL-E-S
Q5201	8-729-055-88	TRANSISTOR MCH3406-TL-E
* Q5202	6-552-054-01	TRANSISTOR SCH2825-TL-E
Q6401	6-551-631-01	TRANSISTOR RN1104MFV (TL3SONY)
Q6402	6-551-631-01	TRANSISTOR RN1104MFV (TL3SONY)
* Q6403	6-551-623-01	TRANSISTOR 2SA2154MFV (TL3SONY)
* Q6404	6-551-623-01	TRANSISTOR 2SA2154MFV (TL3SONY)
* Q6601	6-551-623-01	TRANSISTOR 2SA2154MFV (TL3SONY)
* Q6602	6-551-623-01	TRANSISTOR 2SA2154MFV (TL3SONY)
* Q6603	6-551-623-01	TRANSISTOR 2SA2154MFV (TL3SONY)
* Q6604	6-551-623-01	TRANSISTOR 2SA2154MFV (TL3SONY)
Q6605	6-551-631-01	TRANSISTOR RN1104MFV (TL3SONY)
Q8001	8-729-202-38	TRANSISTOR 2SC3326N-A
Q8002	8-729-202-38	TRANSISTOR 2SC3326N-A
Q8003	8-729-202-38	TRANSISTOR 2SC3326N-A
Q8004	8-729-202-38	TRANSISTOR 2SC3326N-A
Q8005	8-729-202-38	TRANSISTOR 2SC3326N-A
Q8006	8-729-202-38	TRANSISTOR 2SC3326N-A
Q8403	6-551-622-01	TRANSISTOR 2SC6026MFV (TL3SONY)
Q8404	6-551-184-01	TRANSISTOR MCH6305-TL-E-S
* Q8405	6-552-311-01	TRANSISTOR MCH5837-TL-E

Ref. No.	Part No.	Description			
		< RESISTOR >			
R1021	1-218-949-11	METAL CHIP	470	5%	1/16W
R1022	1-218-949-11	METAL CHIP	470	5%	1/16W
R1023	1-216-864-11	SHORT CHIP	0		
R1054	1-218-977-11	METAL CHIP	100K	5%	1/16W
R1055	1-218-949-11	METAL CHIP	470	5%	1/16W
R1201	1-218-990-81	SHORT CHIP	0		
R1220	1-218-990-81	SHORT CHIP	0		
R1221	1-218-990-81	SHORT CHIP	0		
R1222	1-218-990-81	SHORT CHIP	0		
R1223	1-218-990-81	SHORT CHIP	0		
R1224	1-218-990-81	SHORT CHIP	0		
R1225	1-218-990-81	SHORT CHIP	0		
R1228	1-218-990-81	SHORT CHIP	0		
R1229	1-218-990-81	SHORT CHIP	0		
R1235	1-216-864-11	SHORT CHIP	0		
R1401	1-218-953-11	METAL CHIP	1K	5%	1/16W
R1402	1-218-977-11	METAL CHIP	100K	5%	1/16W
R1403	1-218-977-11	METAL CHIP	100K	5%	1/16W
R1404	1-218-990-81	SHORT CHIP	0		
R1407	1-218-953-11	METAL CHIP	1K	5%	1/16W
R1408	1-218-990-81	SHORT CHIP	0		
R1411	1-218-990-81	SHORT CHIP	0		
R1417	1-216-864-11	SHORT CHIP	0		
R1431	1-218-990-81	SHORT CHIP	0		
R1432	1-218-990-81	SHORT CHIP	0		
R1433	1-218-990-81	SHORT CHIP	0		
R1441	1-218-990-81	SHORT CHIP	0		
R1444	1-218-990-81	SHORT CHIP	0		
R1451	1-218-935-11	METAL CHIP	33	5%	1/16W
R1452	1-218-935-11	METAL CHIP	33	5%	1/16W
R1453	1-218-935-11	METAL CHIP	33	5%	1/16W
R1605	1-218-990-81	SHORT CHIP	0		
R2001	1-218-977-11	METAL CHIP	100K	5%	1/16W
R2002	1-218-989-11	METAL CHIP	1M	5%	1/16W
R2003	1-218-990-81	SHORT CHIP	0		
R2004	1-218-933-11	METAL CHIP	22	5%	1/16W
R2006	1-218-941-81	METAL CHIP	100	5%	1/16W
R2007	1-218-951-11	METAL CHIP	680	5%	1/16W
R2008	1-218-959-11	METAL CHIP	3.3K	5%	1/16W
R2009	1-218-951-11	METAL CHIP	680	5%	1/16W
R2010	1-218-959-11	METAL CHIP	3.3K	5%	1/16W
R2011	1-218-951-11	METAL CHIP	680	5%	1/16W
R2012	1-218-959-11	METAL CHIP	3.3K	5%	1/16W
R2013	1-218-941-11	METAL CHIP	100	5%	1/16W
* R2014	1-208-869-11	METAL CHIP	180	0.5%	1/16W
* R2015	1-208-869-11	METAL CHIP	180	0.5%	1/16W
R2016	1-208-671-11	METAL CHIP	330	0.5%	1/16W
R2017	1-208-671-11	METAL CHIP	330	0.5%	1/16W
R2018	1-208-671-11	METAL CHIP	330	0.5%	1/16W
R2019	1-218-990-81	SHORT CHIP	0		
R2020	1-218-953-11	METAL CHIP	1K	5%	1/16W
R2021	1-218-958-11	METAL CHIP	2.7K	5%	1/16W
R2022	1-218-958-11	METAL CHIP	2.7K	5%	1/16W
R2023	1-208-905-11	METAL CHIP	5.6K	0.5%	1/16W
R2025	1-218-935-11	METAL CHIP	33	5%	1/16W
R2026	1-208-883-81	METAL CHIP	680	0.5%	1/16W
R2027	1-218-935-11	METAL CHIP	33	5%	1/16W

Ref. No.	Part No.	Description			
R2028	1-216-864-11	SHORT CHIP	0		
R2030	1-218-935-11	METAL CHIP	33	5%	1/16W
R2031	1-218-961-11	METAL CHIP	4.7K	5%	1/16W
R2033	1-218-965-11	METAL CHIP	10K	5%	1/16W
R2034	1-218-961-11	METAL CHIP	4.7K	5%	1/16W
R2035	1-218-961-11	METAL CHIP	4.7K	5%	1/16W
R2038	1-218-990-81	SHORT CHIP	0		
R2044	1-218-990-81	SHORT CHIP	0		
R2045	1-218-990-81	SHORT CHIP	0		
R2049	1-218-985-11	METAL CHIP	470K	5%	1/16W
R2050	1-218-977-11	METAL CHIP	100K	5%	1/16W
R2201	1-216-864-11	SHORT CHIP	0		
R2202	1-216-864-11	SHORT CHIP	0		
R2203	1-216-864-11	SHORT CHIP	0		
R2204	1-218-990-81	SHORT CHIP	0		
R2205	1-218-990-81	SHORT CHIP	0		
R2305	1-218-929-11	METAL CHIP	10	5%	1/16W
R2306	1-218-935-11	METAL CHIP	33	5%	1/16W
R2307	1-218-935-11	METAL CHIP	33	5%	1/16W
R2311	1-218-933-11	METAL CHIP	22	5%	1/16W
R2312	1-218-933-11	METAL CHIP	22	5%	1/16W
R2313	1-218-933-11	METAL CHIP	22	5%	1/16W
R2315	1-218-935-11	METAL CHIP	33	5%	1/16W
R2316	1-218-935-11	METAL CHIP	33	5%	1/16W
R2317	1-218-935-11	METAL CHIP	33	5%	1/16W
R2319	1-218-990-81	SHORT CHIP	0		
R2324	1-218-990-81	SHORT CHIP	0		
R2325	1-218-941-81	METAL CHIP	100	5%	1/16W
R2326	1-218-941-81	METAL CHIP	100	5%	1/16W
R2327	1-218-941-81	METAL CHIP	100	5%	1/16W
R2328	1-218-941-81	METAL CHIP	100	5%	1/16W
R2329	1-218-941-81	METAL CHIP	100	5%	1/16W
R2334	1-218-940-11	METAL CHIP	82	5%	1/16W
R2335	1-218-990-81	SHORT CHIP	0		
R2336	1-218-990-81	SHORT CHIP	0		
R2337	1-218-935-11	METAL CHIP	33	5%	1/16W
R2342	1-218-940-11	METAL CHIP	82	5%	1/16W
R2343	1-218-941-81	METAL CHIP	100	5%	1/16W
R2348	1-218-941-81	METAL CHIP	100	5%	1/16W
R2349	1-218-941-81	METAL CHIP	100	5%	1/16W
R2350	1-218-941-81	METAL CHIP	100	5%	1/16W
R2351	1-218-941-81	METAL CHIP	100	5%	1/16W
R2352	1-218-935-11	METAL CHIP	33	5%	1/16W
R2356	1-218-990-81	SHORT CHIP	0		
R2357	1-218-990-81	SHORT CHIP	0		
R2358	1-218-941-81	METAL CHIP	100	5%	1/16W
R2359	1-218-941-81	METAL CHIP	100	5%	1/16W
R2360	1-218-941-81	METAL CHIP	100	5%	1/16W
R2361	1-218-941-81	METAL CHIP	100	5%	1/16W
R2362	1-218-941-81	METAL CHIP	100	5%	1/16W
R2363	1-218-940-11	METAL CHIP	82	5%	1/16W
R2521	1-218-990-81	SHORT CHIP	0		
R2571	1-218-977-11	METAL CHIP	100K	5%	1/16W
R2572	1-218-977-11	METAL CHIP	100K	5%	1/16W
R2573	1-218-953-11	METAL CHIP	1K	5%	1/16W
R2574	1-218-953-11	METAL CHIP	1K	5%	1/16W
R2601	1-218-935-11	METAL CHIP	33	5%	1/16W
R2602	1-218-945-11	METAL CHIP	220	5%	1/16W
R2603	1-218-990-81	SHORT CHIP	0		

Ref. No.	Part No.	Description			
R2609	1-218-953-11	METAL CHIP	1K	5%	1/16W
R2803	1-218-990-81	SHORT CHIP	0		
R2804	1-218-990-81	SHORT CHIP	0		
R2808	1-208-860-81	METAL CHIP	75	0.5%	1/16W
R2823	1-218-948-11	METAL CHIP	390	5%	1/16W
R2824	1-218-948-11	METAL CHIP	390	5%	1/16W
R2825	1-218-948-11	METAL CHIP	390	5%	1/16W
R2826	1-208-695-11	METAL CHIP	3.3K	0.5%	1/16W
R2827	1-208-675-11	METAL CHIP	470	0.5%	1/16W
R2828	1-208-675-11	METAL CHIP	470	0.5%	1/16W
R2829	1-208-860-81	METAL CHIP	75	0.5%	1/16W
R2830	1-208-860-81	METAL CHIP	75	0.5%	1/16W
R2831	1-208-860-81	METAL CHIP	75	0.5%	1/16W
R2834	1-218-941-11	METAL CHIP	100	5%	1/16W
R2835	1-208-691-11	METAL CHIP	2.2K	0.5%	1/16W
R2836	1-208-683-11	METAL CHIP	1K	0.5%	1/16W
R2838	1-218-953-11	METAL CHIP	1K	5%	1/16W
R2839	1-218-977-11	METAL CHIP	100K	5%	1/16W
R3002	1-218-965-11	METAL CHIP	10K	5%	1/16W
R3005	1-218-929-11	METAL CHIP	10	5%	1/16W
R3011	1-218-935-11	METAL CHIP	33	5%	1/16W
R3012	1-218-990-81	SHORT CHIP	0		
R3019	1-208-911-11	METAL CHIP	10K	0.5%	1/16W
R3020	1-208-911-11	METAL CHIP	10K	0.5%	1/16W
R3022	1-208-911-11	METAL CHIP	10K	0.5%	1/16W
R3023	1-208-911-11	METAL CHIP	10K	0.5%	1/16W
R3024	1-208-911-11	METAL CHIP	10K	0.5%	1/16W
R3029	1-218-929-11	METAL CHIP	10	5%	1/16W
R3030	1-218-929-11	METAL CHIP	10	5%	1/16W
R3031	1-218-977-11	METAL CHIP	100K	5%	1/16W
R3032	1-218-941-81	METAL CHIP	100	5%	1/16W
R3033	1-218-933-11	METAL CHIP	22	5%	1/16W
R3035	1-218-935-11	METAL CHIP	33	5%	1/16W
R3039	1-218-985-11	METAL CHIP	470K	5%	1/16W
R3040	1-218-935-11	METAL CHIP	33	5%	1/16W
R3041	1-218-935-11	METAL CHIP	33	5%	1/16W
R3042	1-218-935-11	METAL CHIP	33	5%	1/16W
R3043	1-218-935-11	METAL CHIP	33	5%	1/16W
R3044	1-218-935-11	METAL CHIP	33	5%	1/16W
R3045	1-218-935-11	METAL CHIP	33	5%	1/16W
R3046	1-218-935-11	METAL CHIP	33	5%	1/16W
R3047	1-218-935-11	METAL CHIP	33	5%	1/16W
R3048	1-218-935-11	METAL CHIP	33	5%	1/16W
R3301	1-216-793-11	METAL CHIP	4.7	5%	1/10W
R3407	1-218-953-11	METAL CHIP	1K	5%	1/16W
R3408	1-218-953-11	METAL CHIP	1K	5%	1/16W
R3409	1-218-941-81	METAL CHIP	100	5%	1/16W
R3410	1-218-941-81	METAL CHIP	100	5%	1/16W
R3411	1-218-933-11	METAL CHIP	22	5%	1/16W
R3601	1-218-990-81	SHORT CHIP	0		
R3709	1-218-973-11	METAL CHIP	47K	5%	1/16W
R3710	1-218-973-11	METAL CHIP	47K	5%	1/16W
R3711	1-218-973-11	METAL CHIP	47K	5%	1/16W
R3714	1-218-973-11	METAL CHIP	47K	5%	1/16W
R3715	1-218-973-11	METAL CHIP	47K	5%	1/16W
R3716	1-218-973-11	METAL CHIP	47K	5%	1/16W
R3717	1-218-990-81	SHORT CHIP	0		
R3718	1-218-990-81	SHORT CHIP	0		
R3719	1-218-990-81	SHORT CHIP	0		

Ref. No.	Part No.	Description			
R3720	1-218-990-81	SHORT CHIP	0		
R3721	1-218-990-81	SHORT CHIP	0		
R3722	1-218-990-81	SHORT CHIP	0		
R3723	1-218-990-81	SHORT CHIP	0		
R3724	1-218-990-81	SHORT CHIP	0		
R4003	1-218-933-11	METAL CHIP	22	5%	1/16W
R4004	1-218-935-11	METAL CHIP	33	5%	1/16W
R4005	1-218-935-11	METAL CHIP	33	5%	1/16W
R4008	1-218-941-81	METAL CHIP	100	5%	1/16W
R4009	1-218-941-81	METAL CHIP	100	5%	1/16W
R4010	1-218-941-81	METAL CHIP	100	5%	1/16W
R4011	1-218-941-81	METAL CHIP	100	5%	1/16W
R4018	1-218-935-11	METAL CHIP	33	5%	1/16W
R4019	1-218-935-11	METAL CHIP	33	5%	1/16W
R4071	1-218-935-11	METAL CHIP	33	5%	1/16W
R4085	1-218-990-81	SHORT CHIP	0		
R4111	1-218-965-11	METAL CHIP	10K	5%	1/16W
R4113	1-218-941-81	METAL CHIP	100	5%	1/16W
R4115	1-218-965-11	METAL CHIP	10K	5%	1/16W
R4117	1-218-969-11	METAL CHIP	22K	5%	1/16W
R4122	1-218-965-11	METAL CHIP	10K	5%	1/16W
R4123	1-218-965-11	METAL CHIP	10K	5%	1/16W
R4124	1-216-833-11	METAL CHIP	10K	5%	1/10W
R4125	1-218-965-11	METAL CHIP	10K	5%	1/16W
R4126	1-218-965-11	METAL CHIP	10K	5%	1/16W
R4129	1-218-941-81	METAL CHIP	100	5%	1/16W
R4142	1-218-977-11	METAL CHIP	100K	5%	1/16W
R4143	1-218-941-11	METAL CHIP	100	5%	1/16W
R4149	1-218-935-11	METAL CHIP	33	5%	1/16W
R4150	1-218-935-11	METAL CHIP	33	5%	1/16W
R4152	1-218-935-11	METAL CHIP	33	5%	1/16W
R4154	1-218-990-81	SHORT CHIP	0		
R4155	1-218-968-11	METAL CHIP	18K	5%	1/16W
R4156	1-218-965-11	METAL CHIP	10K	5%	1/16W
R4414	1-218-935-11	METAL CHIP	33	5%	1/16W
R4443	1-218-941-11	METAL CHIP	100	5%	1/16W
R4444	1-208-691-11	METAL CHIP	2.2K	0.5%	1/16W
R4445	1-208-683-11	METAL CHIP	1K	0.5%	1/16W
R4446	1-208-661-11	METAL CHIP	120	0.5%	1/16W
R4447	1-208-883-81	METAL CHIP	680	0.5%	1/16W
R4448	1-208-683-11	METAL CHIP	1K	0.5%	1/16W
R4449	1-218-990-81	SHORT CHIP	0		
R4450	1-218-990-81	SHORT CHIP	0		
R4451	1-218-990-81	SHORT CHIP	0		
R4452	1-218-990-81	SHORT CHIP	0		
R4453	1-218-990-81	SHORT CHIP	0		
R4454	1-208-911-11	METAL CHIP	10K	0.5%	1/16W
R4455	1-218-990-81	SHORT CHIP	0		
R4456	1-218-953-11	METAL CHIP	1K	5%	1/16W
R4457	1-240-582-11	METAL CHIP	6.8	5%	1/16W
R4458	1-218-990-81	SHORT CHIP	0		
R4459	1-220-802-11	METAL CHIP	3.3	5%	1/16W
R4460	1-218-990-81	SHORT CHIP	0		
R4461	1-218-990-81	SHORT CHIP	0		
R4462	1-218-990-81	SHORT CHIP	0		
R4463	1-208-884-81	METAL CHIP	750	0.5%	1/16W
R4464	1-208-860-81	METAL CHIP	75	0.5%	1/16W
R4465	1-208-860-81	METAL CHIP	75	0.5%	1/16W
R4466	1-208-661-11	METAL CHIP	120	0.5%	1/16W

Ref. No.	Part No.	Description			
R4467	1-208-661-11	METAL CHIP	120	0.5%	1/16W
R4468	1-208-860-81	METAL CHIP	75	0.5%	1/16W
R4602	1-216-793-11	METAL CHIP	4.7	5%	1/10W
R4805	1-218-990-81	SHORT CHIP	0		
R4809	1-218-971-11	METAL CHIP	33K	5%	1/16W
R4810	1-208-886-81	METAL CHIP	910	0.5%	1/16W
R4816	1-218-935-11	METAL CHIP	33	5%	1/16W
R4817	1-218-935-11	METAL CHIP	33	5%	1/16W
R4818	1-218-935-11	METAL CHIP	33	5%	1/16W
R4819	1-218-935-11	METAL CHIP	33	5%	1/16W
R4820	1-218-935-11	METAL CHIP	33	5%	1/16W
R4821	1-218-935-11	METAL CHIP	33	5%	1/16W
R4822	1-218-935-11	METAL CHIP	33	5%	1/16W
R4823	1-218-935-11	METAL CHIP	33	5%	1/16W
R4824	1-218-956-11	METAL CHIP	1.8K	5%	1/16W
R4826	1-218-956-11	METAL CHIP	1.8K	5%	1/16W
R4827	1-218-973-11	METAL CHIP	47K	5%	1/16W
R5015	1-218-965-11	METAL CHIP	10K	5%	1/16W
R5016	1-218-953-11	METAL CHIP	1K	5%	1/16W
R5017	1-218-989-11	METAL CHIP	1M	5%	1/16W
R5018	1-218-945-11	METAL CHIP	220	5%	1/16W
R5019	1-218-990-81	SHORT CHIP	0		
R5201	1-218-990-81	SHORT CHIP	0		
R5202	1-218-941-81	METAL CHIP	100	5%	1/16W
R5203	1-208-927-11	METAL CHIP	47K	0.5%	1/16W
R5204	1-218-961-11	METAL CHIP	4.7K	5%	1/16W
R5205	1-218-961-11	METAL CHIP	4.7K	5%	1/16W
R5208	1-218-990-81	SHORT CHIP	0		
R5219	1-208-911-11	METAL CHIP	10K	0.5%	1/16W
R5224	1-208-935-11	METAL CHIP	100K	0.5%	1/16W
R5229	1-242-967-81	METAL CHIP	1	5%	1/16W
R5230	1-216-864-11	SHORT CHIP	0		
R5231	1-216-864-11	SHORT CHIP	0		
R5232	1-216-864-11	SHORT CHIP	0		
R5233	1-216-864-11	SHORT CHIP	0		
R5234	1-216-864-11	SHORT CHIP	0		
R5235	1-216-864-11	SHORT CHIP	0		
R5236	1-218-990-81	SHORT CHIP	0		
R5237	1-216-864-11	SHORT CHIP	0		
R5238	1-216-864-11	SHORT CHIP	0		
R5239	1-216-864-11	SHORT CHIP	0		
R5240	1-216-864-11	SHORT CHIP	0		
R5241	1-216-864-11	SHORT CHIP	0		
R5242	1-216-864-11	SHORT CHIP	0		
R5243	1-216-864-11	SHORT CHIP	0		
R5244	1-216-864-11	SHORT CHIP	0		
R5245	1-208-943-11	METAL CHIP	220K	0.5%	1/16W
R5246	1-208-911-11	METAL CHIP	10K	0.5%	1/16W
R5247	1-218-990-81	SHORT CHIP	0		
R5249	1-208-635-11	METAL CHIP	10	0.5%	1/16W
R5250	1-216-295-91	SHORT CHIP	0		
R5251	1-216-295-91	SHORT CHIP	0		
R5252	1-216-295-91	SHORT CHIP	0		
R5253	1-216-295-91	SHORT CHIP	0		
R5254	1-216-295-91	SHORT CHIP	0		
R5255	1-216-295-91	SHORT CHIP	0		
R5256	1-216-295-91	SHORT CHIP	0		
R5257	1-216-295-91	SHORT CHIP	0		

Ref. No.	Part No.	Description			
R5258	1-216-295-91	SHORT CHIP	0		
R5260	1-216-295-91	SHORT CHIP	0		
R5261	1-216-295-91	SHORT CHIP	0		
R5262	1-216-295-91	SHORT CHIP	0		
R5263	1-218-990-81	SHORT CHIP	0		
R5264	1-218-990-81	SHORT CHIP	0		
R5401	1-218-990-81	SHORT CHIP	0		
R5403	1-218-990-81	SHORT CHIP	0		
R5404	1-245-604-11	METAL CHIP	10M	5%	1/16W
R5405	1-218-965-11	METAL CHIP	10K	5%	1/16W
R5406	1-208-893-11	METAL CHIP	1.8K	0.5%	1/16W
R5407	1-218-961-11	METAL CHIP	4.7K	5%	1/16W
R5408	1-218-953-11	METAL CHIP	1K	5%	1/16W
R5410	1-208-703-11	METAL CHIP	6.8K	0.5%	1/16W
R5411	1-218-973-11	METAL CHIP	47K	5%	1/16W
R5412	1-218-953-11	METAL CHIP	1K	5%	1/16W
R5414	1-218-949-11	METAL CHIP	470	5%	1/16W
R5415	1-218-973-11	METAL CHIP	47K	5%	1/16W
R5416	1-218-965-11	METAL CHIP	10K	5%	1/16W
R5417	1-218-985-11	METAL CHIP	470K	5%	1/16W
R5418	1-218-989-11	METAL CHIP	1M	5%	1/16W
R5419	1-218-967-11	METAL CHIP	15K	5%	1/16W
R5420	1-208-927-11	METAL CHIP	47K	0.5%	1/16W
R5421	1-208-935-11	METAL CHIP	100K	0.5%	1/16W
R5422	1-218-965-11	METAL CHIP	10K	5%	1/16W
R5423	1-218-953-11	METAL CHIP	1K	5%	1/16W
R5429	1-218-977-11	METAL CHIP	100K	5%	1/16W
R5432	1-218-977-11	METAL CHIP	100K	5%	1/16W
R5433	1-218-977-11	METAL CHIP	100K	5%	1/16W
R5434	1-218-989-11	METAL CHIP	1M	5%	1/16W
R5435	1-218-953-11	METAL CHIP	1K	5%	1/16W
R5436	1-218-990-81	SHORT CHIP	0		
R5438	1-218-977-11	METAL CHIP	100K	5%	1/16W
R5439	1-208-911-11	METAL CHIP	10K	0.5%	1/16W
R5440	1-218-990-81	SHORT CHIP	0		
R5441	1-218-990-81	SHORT CHIP	0		
R5443	1-218-983-11	METAL CHIP	330K	5%	1/16W
R5444	1-218-990-81	SHORT CHIP	0		
R5445	1-218-990-81	SHORT CHIP	0		
R5446	1-218-981-91	METAL CHIP	220K	5%	1/16W
R5448	1-218-990-81	SHORT CHIP	0		
R5450	1-218-990-81	SHORT CHIP	0		
R5605	1-218-941-81	METAL CHIP	100	5%	1/16W
R5607	1-218-965-11	METAL CHIP	10K	5%	1/16W
R5608	1-218-990-81	SHORT CHIP	0		
R5610	1-218-972-11	METAL CHIP	39K	5%	1/16W
R5611	1-218-972-11	METAL CHIP	39K	5%	1/16W
R5612	1-218-953-11	METAL CHIP	1K	5%	1/16W
R5613	1-218-953-11	METAL CHIP	1K	5%	1/16W
R5615	1-218-977-11	METAL CHIP	100K	5%	1/16W
R5616	1-218-985-11	METAL CHIP	470K	5%	1/16W
R5619	1-218-973-11	METAL CHIP	47K	5%	1/16W
R5621	1-218-953-11	METAL CHIP	1K	5%	1/16W
R5622	1-218-953-11	METAL CHIP	1K	5%	1/16W
R5623	1-218-953-11	METAL CHIP	1K	5%	1/16W
R5624	1-218-989-11	METAL CHIP	1M	5%	1/16W
R5625	1-218-989-11	METAL CHIP	1M	5%	1/16W
R5626	1-218-965-11	METAL CHIP	10K	5%	1/16W

Ref. No.	Part No.	Description			
R5627	1-218-973-11	METAL CHIP	47K	5%	1/16W
R5628	1-218-989-11	METAL CHIP	1M	5%	1/16W
R5629	1-218-989-11	METAL CHIP	1M	5%	1/16W
R5630	1-218-977-11	METAL CHIP	100K	5%	1/16W
R5631	1-218-977-11	METAL CHIP	100K	5%	1/16W
R5632	1-216-864-11	SHORT CHIP	0		
R5633	1-218-990-81	SHORT CHIP	0		
R5636	1-218-977-11	METAL CHIP	100K	5%	1/16W
R5641	1-218-990-81	SHORT CHIP	0		
R6019	1-218-958-11	METAL CHIP	2.7K	5%	1/16W
R6020	1-208-721-11	METAL CHIP	39K	0.5%	1/16W
R6021	1-208-909-11	METAL CHIP	8.2K	0.5%	1/16W
R6032	1-208-893-11	METAL CHIP	1.8K	0.5%	1/16W
R6033	1-208-909-11	METAL CHIP	8.2K	0.5%	1/16W
R6036	1-208-721-11	METAL CHIP	39K	0.5%	1/16W
R6037	1-218-958-11	METAL CHIP	2.7K	5%	1/16W
R6040	1-208-721-11	METAL CHIP	39K	0.5%	1/16W
R6043	1-208-893-11	METAL CHIP	1.8K	0.5%	1/16W
R6047	1-208-893-11	METAL CHIP	1.8K	0.5%	1/16W
R6050	1-208-721-11	METAL CHIP	39K	0.5%	1/16W
R6053	1-218-965-11	METAL CHIP	10K	5%	1/16W
R6085	1-208-893-11	METAL CHIP	1.8K	0.5%	1/16W
R6086	1-208-909-11	METAL CHIP	8.2K	0.5%	1/16W
R6087	1-208-721-11	METAL CHIP	39K	0.5%	1/16W
R6088	1-208-909-11	METAL CHIP	8.2K	0.5%	1/16W
R6089	1-208-721-11	METAL CHIP	39K	0.5%	1/16W
R6090	1-218-958-11	METAL CHIP	2.7K	5%	1/16W
R6091	1-218-958-11	METAL CHIP	2.7K	5%	1/16W
R6101	1-218-990-81	SHORT CHIP	0		
R6201	1-218-956-11	METAL CHIP	1.8K	5%	1/16W
R6202	1-218-956-11	METAL CHIP	1.8K	5%	1/16W
R6203	1-208-721-11	METAL CHIP	39K	0.5%	1/16W
R6204	1-218-972-11	METAL CHIP	39K	5%	1/16W
R6211	1-218-956-11	METAL CHIP	1.8K	5%	1/16W
R6212	1-218-956-11	METAL CHIP	1.8K	5%	1/16W
R6217	1-218-972-11	METAL CHIP	39K	5%	1/16W
R6222	1-208-721-11	METAL CHIP	39K	0.5%	1/16W
R6232	1-218-965-11	METAL CHIP	10K	5%	1/16W
R6263	1-208-721-11	METAL CHIP	39K	0.5%	1/16W
R6264	1-208-721-11	METAL CHIP	39K	0.5%	1/16W
R6268	1-218-990-81	SHORT CHIP	0		
R6406	1-218-881-11	METAL CHIP	27K	0.5%	1/10W
R6408	1-218-881-11	METAL CHIP	27K	0.5%	1/10W
R6409	1-216-864-11	SHORT CHIP	0		
R6411	1-216-864-11	SHORT CHIP	0		
R6412	1-218-990-81	SHORT CHIP	0		
R6413	1-218-990-81	SHORT CHIP	0		
R6414	1-208-911-11	METAL CHIP	10K	0.5%	1/16W
R6415	1-208-911-11	METAL CHIP	10K	0.5%	1/16W
R6416	1-218-990-81	SHORT CHIP	0		
R6417	1-218-990-81	SHORT CHIP	0		
R6421	1-218-973-11	METAL CHIP	47K	5%	1/16W
R6422	1-218-973-11	METAL CHIP	47K	5%	1/16W
R6425	1-218-990-81	SHORT CHIP	0		
R6426	1-218-953-11	METAL CHIP	1K	5%	1/16W
R6427	1-218-953-11	METAL CHIP	1K	5%	1/16W
R6428	1-218-968-11	METAL CHIP	18K	5%	1/16W
R6429	1-218-968-11	METAL CHIP	18K	5%	1/16W
R6430	1-218-971-11	METAL CHIP	33K	5%	1/16W

Ref. No.	Part No.	Description			
R6431	1-218-971-11	METAL CHIP	33K	5%	1/16W
R6432	1-208-935-11	METAL CHIP	100K	0.5%	1/16W
R6433	1-208-935-11	METAL CHIP	100K	0.5%	1/16W
R6435	1-208-947-11	METAL CHIP	330K	0.5%	1/16W
R6436	1-208-947-11	METAL CHIP	330K	0.5%	1/16W
R6437	1-218-977-11	METAL CHIP	100K	5%	1/16W
R6438	1-216-832-11	METAL CHIP	8.2K	5%	1/10W
R6439	1-218-881-11	METAL CHIP	27K	0.5%	1/10W
R6440	1-216-832-11	METAL CHIP	8.2K	5%	1/10W
R6441	1-218-881-11	METAL CHIP	27K	0.5%	1/10W
R6443	1-218-929-11	METAL CHIP	10	5%	1/16W
R6508	1-218-873-11	METAL CHIP	12K	0.5%	1/10W
R6515	1-216-864-11	SHORT CHIP	0		
R6516	1-218-990-81	SHORT CHIP	0		
R6610	1-218-973-11	METAL CHIP	47K	5%	1/16W
R6611	1-218-953-11	METAL CHIP	1K	5%	1/16W
R6612	1-218-973-11	METAL CHIP	47K	5%	1/16W
R6615	1-218-973-11	METAL CHIP	47K	5%	1/16W
R6616	1-218-975-11	METAL CHIP	68K	5%	1/16W
R6617	1-218-953-11	METAL CHIP	1K	5%	1/16W
R6618	1-218-973-11	METAL CHIP	47K	5%	1/16W
R6619	1-218-953-11	METAL CHIP	1K	5%	1/16W
R6620	1-218-953-11	METAL CHIP	1K	5%	1/16W
R6621	1-218-973-11	METAL CHIP	47K	5%	1/16W
R6629	1-216-864-11	SHORT CHIP	0		
R8006	1-208-918-11	METAL CHIP	20K	0.5%	1/16W
R8010	1-218-971-11	METAL CHIP	33K	5%	1/16W
R8013	1-218-929-11	METAL CHIP	10	5%	1/16W
R8014	1-218-941-81	METAL CHIP	100	5%	1/16W
R8015	1-218-941-81	METAL CHIP	100	5%	1/16W
R8016	1-218-941-81	METAL CHIP	100	5%	1/16W
R8017	1-218-935-11	METAL CHIP	33	5%	1/16W
R8018	1-219-570-11	METAL CHIP	10M	5%	1/10W
R8019	1-245-604-11	METAL CHIP	10M	5%	1/16W
R8025	1-218-977-11	METAL CHIP	100K	5%	1/16W
R8026	1-218-970-11	METAL CHIP	27K	5%	1/16W
R8029	1-218-983-11	METAL CHIP	330K	5%	1/16W
R8030	1-218-892-11	METAL CHIP	75K	0.5%	1/10W
R8031	1-208-905-11	METAL CHIP	5.6K	0.5%	1/16W
R8032	1-218-864-11	METAL CHIP	5.1K	0.5%	1/10W
R8033	1-218-958-11	METAL CHIP	2.7K	5%	1/16W
* R8034	1-208-869-11	METAL CHIP	180	0.5%	1/16W
R8035	1-218-969-11	METAL CHIP	22K	5%	1/16W
R8036	1-218-969-11	METAL CHIP	22K	5%	1/16W
R8037	1-208-905-11	METAL CHIP	5.6K	0.5%	1/16W
R8038	1-218-864-11	METAL CHIP	5.1K	0.5%	1/10W
R8039	1-218-941-81	METAL CHIP	100	5%	1/16W
R8040	1-218-958-11	METAL CHIP	2.7K	5%	1/16W
* R8041	1-208-869-11	METAL CHIP	180	0.5%	1/16W
R8042	1-218-941-81	METAL CHIP	100	5%	1/16W
R8043	1-218-941-81	METAL CHIP	100	5%	1/16W
R8044	1-218-977-11	METAL CHIP	100K	5%	1/16W
R8046	1-218-941-81	METAL CHIP	100	5%	1/16W
R8054	1-218-953-11	METAL CHIP	1K	5%	1/16W
R8055	1-218-961-11	METAL CHIP	4.7K	5%	1/16W
R8056	1-218-961-11	METAL CHIP	4.7K	5%	1/16W
R8057	1-208-922-11	METAL CHIP	30K	0.5%	1/16W
R8058	1-208-922-11	METAL CHIP	30K	0.5%	1/16W

Ref. No.	Part No.	Description			
R8059	1-208-713-11	METAL CHIP	18K	0.5%	1/16W
R8060	1-218-941-81	METAL CHIP	100	5%	1/16W
R8061	1-218-977-11	METAL CHIP	100K	5%	1/16W
R8062	1-208-713-11	METAL CHIP	18K	0.5%	1/16W
R8063	1-218-977-11	METAL CHIP	100K	5%	1/16W
R8065	1-218-971-11	METAL CHIP	33K	5%	1/16W
R8068	1-208-911-11	METAL CHIP	10K	0.5%	1/16W
R8069	1-208-711-11	METAL CHIP	15K	0.5%	1/16W
R8070	1-208-711-11	METAL CHIP	15K	0.5%	1/16W
R8071	1-208-911-11	METAL CHIP	10K	0.5%	1/16W
R8072	1-208-911-11	METAL CHIP	10K	0.5%	1/16W
R8073	1-218-971-11	METAL CHIP	33K	5%	1/16W
R8074	1-208-911-11	METAL CHIP	10K	0.5%	1/16W
R8076	1-208-712-11	METAL CHIP	16K	0.5%	1/16W
R8077	1-208-712-11	METAL CHIP	16K	0.5%	1/16W
R8080	1-208-712-11	METAL CHIP	16K	0.5%	1/16W
R8082	1-208-712-11	METAL CHIP	16K	0.5%	1/16W
R8083	1-208-713-11	METAL CHIP	18K	0.5%	1/16W
R8084	1-208-713-11	METAL CHIP	18K	0.5%	1/16W
R8085	1-208-712-11	METAL CHIP	16K	0.5%	1/16W
R8087	1-218-971-11	METAL CHIP	33K	5%	1/16W
R8088	1-208-712-11	METAL CHIP	16K	0.5%	1/16W
R8094	1-211-979-11	METAL CHIP	27	0.5%	1/10W
R8095	1-211-979-11	METAL CHIP	27	0.5%	1/10W
R8096	1-211-979-11	METAL CHIP	27	0.5%	1/10W
R8097	1-211-979-11	METAL CHIP	27	0.5%	1/10W
R8098	1-211-979-11	METAL CHIP	27	0.5%	1/10W
R8099	1-211-979-11	METAL CHIP	27	0.5%	1/10W
R8100	1-218-953-11	METAL CHIP	1K	5%	1/16W
R8101	1-218-941-81	METAL CHIP	100	5%	1/16W
R8102	1-218-953-11	METAL CHIP	1K	5%	1/16W
R8103	1-218-941-81	METAL CHIP	100	5%	1/16W
R8104	1-218-953-11	METAL CHIP	1K	5%	1/16W
R8105	1-218-941-81	METAL CHIP	100	5%	1/16W
R8106	1-218-941-81	METAL CHIP	100	5%	1/16W
R8107	1-218-953-11	METAL CHIP	1K	5%	1/16W
R8108	1-218-941-81	METAL CHIP	100	5%	1/16W
R8109	1-218-941-81	METAL CHIP	100	5%	1/16W
R8110	1-218-941-81	METAL CHIP	100	5%	1/16W
R8112	1-211-975-11	METAL CHIP	18	0.5%	1/10W
R8113	1-211-975-11	METAL CHIP	18	0.5%	1/10W
R8114	1-211-975-11	METAL CHIP	18	0.5%	1/10W
R8115	1-211-975-11	METAL CHIP	18	0.5%	1/10W
R8116	1-211-975-11	METAL CHIP	18	0.5%	1/10W
R8117	1-211-975-11	METAL CHIP	18	0.5%	1/10W
R8119	1-218-953-11	METAL CHIP	1K	5%	1/16W
R8124	1-218-977-11	METAL CHIP	100K	5%	1/16W
R8125	1-218-953-11	METAL CHIP	1K	5%	1/16W
R8126	1-218-989-11	METAL CHIP	1M	5%	1/16W
R8127	1-218-989-11	METAL CHIP	1M	5%	1/16W
R8128	1-218-953-11	METAL CHIP	1K	5%	1/16W
R8129	1-218-953-11	METAL CHIP	1K	5%	1/16W
R8130	1-216-797-11	METAL CHIP	10	5%	1/10W
R8131	1-216-797-11	METAL CHIP	10	5%	1/10W
R8139	1-216-803-11	METAL CHIP	33	5%	1/10W
R8140	1-216-803-11	METAL CHIP	33	5%	1/10W
R8141	1-216-803-11	METAL CHIP	33	5%	1/10W
R8142	1-216-803-11	METAL CHIP	33	5%	1/10W

Ref. No.	Part No.	Description			
R8143	1-216-803-11	METAL CHIP	33	5%	1/10W
R8146	1-218-941-81	METAL CHIP	100	5%	1/16W
R8147	1-218-941-81	METAL CHIP	100	5%	1/16W
R8148	1-218-941-81	METAL CHIP	100	5%	1/16W
R8149	1-218-941-81	METAL CHIP	100	5%	1/16W
R8150	1-218-941-81	METAL CHIP	100	5%	1/16W
R8169	1-216-864-11	SHORT CHIP	0		
R8170	1-218-982-11	METAL CHIP	270K	5%	1/16W
R8172	1-208-935-11	METAL CHIP	100K	0.5%	1/16W
R8176	1-218-973-11	METAL CHIP	47K	5%	1/16W
R8177	1-218-973-11	METAL CHIP	47K	5%	1/16W
R8411	1-218-446-11	METAL CHIP	1	5%	1/10W
R8418	1-218-446-11	METAL CHIP	1	5%	1/10W
R8419	1-218-990-81	SHORT CHIP	0		
R8420	1-218-941-81	METAL CHIP	100	5%	1/16W
R8423	1-218-977-11	METAL CHIP	100K	5%	1/16W
R8426	1-218-977-11	METAL CHIP	100K	5%	1/16W
R8427	1-218-959-11	METAL CHIP	3.3K	5%	1/16W
R8428	1-218-973-11	METAL CHIP	47K	5%	1/16W
R8429	1-218-973-11	METAL CHIP	47K	5%	1/16W
R8432	1-218-978-11	METAL CHIP	120K	5%	1/16W
R8433	1-208-709-11	METAL CHIP	12K	0.5%	1/16W
R8434	1-218-961-11	METAL CHIP	4.7K	5%	1/16W
		< COMPOSITION CIRCUIT BLOCK >			
RB1001	1-234-375-21	RES, NETWORK	1K (1005X4)		
RB2001	1-234-378-21	RES, NETWORK	10K (1005X4)		
RB2002	1-234-375-21	RES, NETWORK	1K (1005X4)		
RB2003	1-234-375-21	RES, NETWORK	1K (1005X4)		
RB2004	1-234-378-21	RES, NETWORK	10K (1005X4)		
RB2005	1-234-378-21	RES, NETWORK	10K (1005X4)		
RB2006	1-234-375-21	RES, NETWORK	1K (1005X4)		
RB2007	1-234-375-21	RES, NETWORK	1K (1005X4)		
RB2008	1-234-375-21	RES, NETWORK	1K (1005X4)		
RB2009	1-234-378-21	RES, NETWORK	10K (1005X4)		
		< OSCILLATOR >			
* VCO441	1-814-093-11	OSCILLATOR (VOLTAGE CONTROL) (1.5GHz)			
		< VIBRATOR >			
* X1403	1-813-907-41	QUARTZ CRYSTAL OSCILLATOR (83.076923MHz)			
* X1404	1-813-906-41	QUARTZ CRYSTAL OSCILLATOR (83.16MHz)			
* X2001	1-813-403-81	QUARTZ CRYSTAL OSCILLATOR (12MHz)			
* X5402	1-813-709-61	QUARTZ CRYSTAL UNIT FOR OSCILLATOR (32.768kHz)			
* X5601	1-767-205-81	VIBRATOR, CRYSTAL (20MHz)			
	A-1752-131-A	VF-179 BOARD, COMPLETE			
		**********			
		< CAPACITOR >			
* C6201	1-112-746-11	CERAMIC CHIP	4.7uF	10%	6.3V
C6202	1-100-611-91	CERAMIC CHIP	22uF	20%	6.3V
* C6203	1-112-746-11	CERAMIC CHIP	4.7uF	10%	6.3V
* C6204	1-112-746-11	CERAMIC CHIP	4.7uF	10%	6.3V
C6205	1-100-611-91	CERAMIC CHIP	22uF	20%	6.3V
C6206	1-125-777-11	CERAMIC CHIP	0.1uF	10%	10V
C6207	1-125-777-11	CERAMIC CHIP	0.1uF	10%	10V

Ref. No.	Part No.	Description			
C6208	1-125-777-11	CERAMIC CHIP	0.1uF	10%	10V
C6209	1-125-777-11	CERAMIC CHIP	0.1uF	10%	10V
C6210	1-165-908-11	CERAMIC CHIP	1uF	10%	10V
C6211	1-165-908-11	CERAMIC CHIP	1uF	10%	10V
C6212	1-165-884-11	CERAMIC CHIP	2.2uF	10%	6.3V
C6213	1-100-581-81	CERAMIC CHIP	0.0047uF	10%	50V
C6214	1-119-923-11	CERAMIC CHIP	0.047uF	10%	10V
C6215	1-165-908-11	CERAMIC CHIP	1uF	10%	10V
C6216	1-165-908-11	CERAMIC CHIP	1uF	10%	10V
C6217	1-125-777-11	CERAMIC CHIP	0.1uF	10%	10V
C6218	1-125-777-11	CERAMIC CHIP	0.1uF	10%	10V
C6219	1-125-777-11	CERAMIC CHIP	0.1uF	10%	10V
C6220	1-165-908-11	CERAMIC CHIP	1uF	10%	10V
C6221	1-165-908-11	CERAMIC CHIP	1uF	10%	10V
C6222	1-100-567-81	CERAMIC CHIP	0.01uF	10%	25V
C6223	1-125-777-11	CERAMIC CHIP	0.1uF	10%	10V
* C6224	1-112-746-11	CERAMIC CHIP	4.7uF	10%	6.3V
* C6225	1-112-746-11	CERAMIC CHIP	4.7uF	10%	6.3V
* C6226	1-112-746-11	CERAMIC CHIP	4.7uF	10%	6.3V
* C6227	1-112-746-11	CERAMIC CHIP	4.7uF	10%	6.3V
		< CONNECTOR >			
* CN6201	1-817-829-81	CONNECTOR, FPC (ZIF) 27P			
* CN6202	1-821-202-81	CONNECTOR, FPC (ZIF) 45P			
		< IC >			
* IC6201	6-712-180-01	IC IR3Y80Y6			
		< COIL >			
* L6201	1-481-425-21	INDUCTOR	10uH		
* L6202	1-481-425-21	INDUCTOR	10uH		
* L6203	1-481-425-21	INDUCTOR	10uH		
* L6204	1-481-425-21	INDUCTOR	10uH		
* L6205	1-481-425-21	INDUCTOR	10uH		
		< RESISTOR >			
R6206	1-208-911-11	METAL CHIP	10K	0.5%	1/16W
R6207	1-208-699-11	METAL CHIP	4.7K	0.5%	1/16W
R6209	1-218-977-11	METAL CHIP	100K	5%	1/16W
R6213	1-218-953-11	METAL CHIP	1K	5%	1/16W
	A-1752-130-A	XL-011 BOARD, COMPLETE			
		**********			
(IC5952 is not supplied, but this is included in XL-011 complete board.)					
		< CAPACITOR >			
C5815	1-162-964-11	CERAMIC CHIP	0.001uF	5%	50V
C5817	1-128-594-11	ELECT CHIP	1uF	20%	50V
C5818	1-128-594-11	ELECT CHIP	1uF	20%	50V
C5861	1-165-989-11	CERAMIC CHIP	10uF	10%	6.3V
C5862	1-165-989-11	CERAMIC CHIP	10uF	10%	6.3V
C5863	1-165-875-11	CERAMIC CHIP	10uF	10%	10V
C5865	1-128-594-11	ELECT CHIP	1uF	20%	50V
C5866	1-128-594-11	ELECT CHIP	1uF	20%	50V
C5867	1-128-594-11	ELECT CHIP	1uF	20%	50V
C5868	1-128-594-11	ELECT CHIP	1uF	20%	50V
C5915	1-162-964-11	CERAMIC CHIP	0.001uF	5%	50V

Ref. No.	Part No.	Description			
C5917	1-128-594-11	ELECT CHIP	1uF	20%	50V
C5918	1-128-594-11	ELECT CHIP	1uF	20%	50V
C5960	1-137-910-11	TANTAL. CHIP	10uF	20%	16V
C5961	1-125-777-11	CERAMIC CHIP	0.1uF	10%	10V
C5963	1-125-777-11	CERAMIC CHIP	0.1uF	10%	10V
C5964	1-163-137-00	CERAMIC CHIP	680PF	5%	50V
C5965	1-113-984-11	TANTAL. CHIP	1.5uF	20%	35V
C5966	1-113-984-11	TANTAL. CHIP	1.5uF	20%	35V
C5967	1-113-984-11	TANTAL. CHIP	1.5uF	20%	35V
C5968	1-113-984-11	TANTAL. CHIP	1.5uF	20%	35V
C5969	1-113-984-11	TANTAL. CHIP	1.5uF	20%	35V
C5972	1-113-984-11	TANTAL. CHIP	1.5uF	20%	35V
C5973	1-112-300-91	CERAMIC CHIP	4.7uF	10%	10V
C5974	1-112-300-91	CERAMIC CHIP	4.7uF	10%	10V
C5975	1-164-937-11	CERAMIC CHIP	0.001uF	10%	50V
C5978	1-127-820-11	CERAMIC CHIP	4.7uF	10%	16V
		< CONNECTOR >			
* CN5801	1-816-650-51	FFC/CONNECTOR, FPC (LIF) 24P			
CN5802	1-820-791-11	XLR CONNECTOR (RECEPTACLE) 3P			
		< DIODE >			
D5801	8-719-056-23	DIODE MA2S111-(K8).SO			
D5802	8-719-056-23	DIODE MA2S111-(K8).SO			
D5803	8-719-056-23	DIODE MA2S111-(K8).SO			
D5804	8-719-056-23	DIODE MA2S111-(K8).SO			
D5851	8-719-056-23	DIODE MA2S111-(K8).SO			
D5852	8-719-056-23	DIODE MA2S111-(K8).SO			
D5853	8-719-056-23	DIODE MA2S111-(K8).SO			
D5854	8-719-056-23	DIODE MA2S111-(K8).SO			
D5855	8-719-056-23	DIODE MA2S111-(K8).SO			
D5856	8-719-056-23	DIODE MA2S111-(K8).SO			
D5857	8-719-056-23	DIODE MA2S111-(K8).SO			
D5858	8-719-056-23	DIODE MA2S111-(K8).SO			
D5901	8-719-056-23	DIODE MA2S111-(K8).SO			
D5902	8-719-056-23	DIODE MA2S111-(K8).SO			
D5903	8-719-056-23	DIODE MA2S111-(K8).SO			
D5904	8-719-056-23	DIODE MA2S111-(K8).SO			
D5952	6-500-314-01	DIODE DAN222MT2L			
D5953	6-501-123-01	DIODE RB160M-60TR			
		< IC >			
* IC5801	6-710-823-01	IC NJM2737RB1 (TE2)			
IC5851	6-706-906-01	IC NJM2732RB1 (TE2)			
* IC5901	6-710-823-01	IC NJM2737RB1 (TE2)			
IC5952	(Not supplied)	IC TK11840LTL-G			
(IC5952 is supplied included in XL-011 complete board.)					
		< COIL >			
* L5801	1-481-425-21	INDUCTOR	10uH		
* L5802	1-481-425-21	INDUCTOR	10uH		
* L5901	1-481-425-21	INDUCTOR	10uH		
* L5902	1-481-425-21	INDUCTOR	10uH		
L5951	1-456-499-11	INDUCTOR	4.7uH		
L5953	1-456-136-21	INDUCTOR	10uH		
		< TRANSISTOR >			
Q5803	6-551-294-01	TRANSISTOR	MCH6606-TL-E		
Q5804	6-551-294-01	TRANSISTOR	MCH6606-TL-E		
Q5805	6-551-622-01	TRANSISTOR	2SC6026MFV (TL3SONY)		

Ref. No.	Part No.	Description			
* Q5806	6-551-625-01	TRANSISTOR	RN2104MFV (TL3SONY)		
Q5807	6-550-356-01	TRANSISTOR	MCH6616-TL-E		
Q5808	8-729-044-37	TRANSISTOR	LSK3019FP8TL		
Q5809	6-551-631-01	TRANSISTOR	RN1104MFV (TL3SONY)		
Q5903	6-551-294-01	TRANSISTOR	MCH6606-TL-E		
Q5904	6-551-294-01	TRANSISTOR	MCH6606-TL-E		
Q5905	6-551-622-01	TRANSISTOR	2SC6026MFV (TL3SONY)		
* Q5906	6-551-625-01	TRANSISTOR	RN2104MFV (TL3SONY)		
Q5907	6-550-356-01	TRANSISTOR	MCH6616-TL-E		
Q5908	8-729-044-37	TRANSISTOR	LSK3019FP8TL		
Q5909	6-551-631-01	TRANSISTOR	RN1104MFV (TL3SONY)		
Q5953	8-729-044-37	TRANSISTOR	LSK3019FP8TL		
Q5954	8-729-048-72	TRANSISTOR	2SK2615		
⚠ Q5955	6-551-622-01	TRANSISTOR	2SC6026MFV (TL3SONY)		
Q5956	6-551-622-01	TRANSISTOR	2SC6026MFV (TL3SONY)		
Q5957	6-551-622-01	TRANSISTOR	2SC6026MFV (TL3SONY)		
⚠ Q5958	8-729-119-64	TRANSISTOR	2SA811A-C17		
⚠ Q5959	8-729-119-64	TRANSISTOR	2SA811A-C17		
		< RESISTOR >			
R5801	1-218-877-11	METAL CHIP	18K	0.5%	1/10W
R5802	1-218-877-11	METAL CHIP	18K	0.5%	1/10W
R5803	1-218-877-11	METAL CHIP	18K	0.5%	1/10W
R5804	1-218-877-11	METAL CHIP	18K	0.5%	1/10W
R5805	1-218-853-11	METAL CHIP	1.8K	0.5%	1/10W
R5806	1-218-985-11	METAL CHIP	470K	5%	1/16W
R5807	1-218-877-11	METAL CHIP	18K	0.5%	1/10W
R5808	1-218-853-11	METAL CHIP	1.8K	0.5%	1/10W
R5809	1-218-985-11	METAL CHIP	470K	5%	1/16W
R5810	1-218-877-11	METAL CHIP	18K	0.5%	1/10W
R5811	1-218-877-11	METAL CHIP	18K	0.5%	1/10W
R5812	1-218-877-11	METAL CHIP	18K	0.5%	1/10W
R5813	1-216-817-11	METAL CHIP	470	5%	1/10W
R5814	1-216-817-11	METAL CHIP	470	5%	1/10W
R5815	1-208-711-11	METAL CHIP	15K	0.5%	1/16W
R5816	1-208-909-11	METAL CHIP	8.2K	0.5%	1/16W
R5817	1-208-697-11	METAL CHIP	3.9K	0.5%	1/16W
R5818	1-208-697-11	METAL CHIP	3.9K	0.5%	1/16W
R5821	1-218-835-11	METAL CHIP	330	0.5%	1/10W
R5822	1-218-860-11	METAL CHIP	3.6K	0.5%	1/10W
R5823	1-218-835-11	METAL CHIP	330	0.5%	1/10W
R5824	1-218-860-11	METAL CHIP	3.6K	0.5%	1/10W
R5825	1-216-797-11	METAL CHIP	10	5%	1/10W
R5826	1-216-797-11	METAL CHIP	10	5%	1/10W
R5832	1-208-911-11	METAL CHIP	10K	0.5%	1/16W
R5833	1-208-911-11	METAL CHIP	10K	0.5%	1/16W
R5834	1-208-911-11	METAL CHIP	10K	0.5%	1/16W
R5835	1-208-911-11	METAL CHIP	10K	0.5%	1/16W
R5836	1-218-981-91	METAL CHIP	220K	5%	1/16W
R5837	1-218-981-91	METAL CHIP	220K	5%	1/16W
R5838	1-218-977-11	METAL CHIP	100K	5%	1/16W
R5839	1-218-977-11	METAL CHIP	100K	5%	1/16W
R5840	1-218-977-11	METAL CHIP	100K	5%	1/16W
R5841	1-218-875-11	METAL CHIP	15K	0.5%	1/10W
R5842	1-208-911-11	METAL CHIP	10K	0.5%	1/16W
R5843	1-218-977-11	METAL CHIP	100K	5%	1/16W
R5851	1-218-901-11	METAL CHIP	180K	0.5%	1/10W
R5852	1-218-901-11	METAL CHIP	180K	0.5%	1/10W

Ref. No.	Part No.	Description			
R5853	1-218-901-11	METAL CHIP	180K	0.5%	1/10W
R5854	1-218-901-11	METAL CHIP	180K	0.5%	1/10W
R5855	1-218-878-11	METAL CHIP	20K	0.5%	1/10W
R5856	1-218-878-11	METAL CHIP	20K	0.5%	1/10W
R5857	1-218-878-11	METAL CHIP	20K	0.5%	1/10W
R5858	1-218-878-11	METAL CHIP	20K	0.5%	1/10W
R5859	1-218-871-11	METAL CHIP	10K	0.5%	1/10W
R5860	1-218-871-11	METAL CHIP	10K	0.5%	1/10W
R5861	1-218-871-11	METAL CHIP	10K	0.5%	1/10W
R5862	1-218-871-11	METAL CHIP	10K	0.5%	1/10W
R5863	1-208-911-11	METAL CHIP	10K	0.5%	1/16W
R5864	1-208-911-11	METAL CHIP	10K	0.5%	1/16W
R5865	1-208-911-11	METAL CHIP	10K	0.5%	1/16W
R5866	1-208-911-11	METAL CHIP	10K	0.5%	1/16W
R5867	1-216-797-11	METAL CHIP	10	5%	1/10W
R5868	1-216-797-11	METAL CHIP	10	5%	1/10W
R5901	1-218-877-11	METAL CHIP	18K	0.5%	1/10W
R5902	1-218-877-11	METAL CHIP	18K	0.5%	1/10W
R5903	1-218-877-11	METAL CHIP	18K	0.5%	1/10W
R5904	1-218-877-11	METAL CHIP	18K	0.5%	1/10W
R5905	1-218-853-11	METAL CHIP	1.8K	0.5%	1/10W
R5906	1-218-985-11	METAL CHIP	470K	5%	1/16W
R5907	1-218-877-11	METAL CHIP	18K	0.5%	1/10W
R5908	1-218-853-11	METAL CHIP	1.8K	0.5%	1/10W
R5909	1-218-985-11	METAL CHIP	470K	5%	1/16W
R5910	1-218-877-11	METAL CHIP	18K	0.5%	1/10W
R5911	1-218-877-11	METAL CHIP	18K	0.5%	1/10W
R5912	1-218-877-11	METAL CHIP	18K	0.5%	1/10W
R5913	1-216-817-11	METAL CHIP	470	5%	1/10W
R5914	1-216-817-11	METAL CHIP	470	5%	1/10W
R5915	1-208-711-11	METAL CHIP	15K	0.5%	1/16W
R5916	1-208-909-11	METAL CHIP	8.2K	0.5%	1/16W
R5917	1-208-697-11	METAL CHIP	3.9K	0.5%	1/16W
R5918	1-208-697-11	METAL CHIP	3.9K	0.5%	1/16W
R5921	1-218-835-11	METAL CHIP	330	0.5%	1/10W
R5922	1-218-835-11	METAL CHIP	330	0.5%	1/10W
R5923	1-218-860-11	METAL CHIP	3.6K	0.5%	1/10W
R5924	1-218-860-11	METAL CHIP	3.6K	0.5%	1/10W
R5925	1-216-797-11	METAL CHIP	10	5%	1/10W
R5926	1-216-797-11	METAL CHIP	10	5%	1/10W
R5932	1-208-911-11	METAL CHIP	10K	0.5%	1/16W
R5933	1-208-911-11	METAL CHIP	10K	0.5%	1/16W
R5934	1-208-911-11	METAL CHIP	10K	0.5%	1/16W
R5935	1-208-911-11	METAL CHIP	10K	0.5%	1/16W
R5936	1-218-981-91	METAL CHIP	220K	5%	1/16W
R5937	1-218-981-91	METAL CHIP	220K	5%	1/16W
R5938	1-218-977-11	METAL CHIP	100K	5%	1/16W
R5939	1-218-977-11	METAL CHIP	100K	5%	1/16W
R5940	1-218-977-11	METAL CHIP	100K	5%	1/16W
R5941	1-218-875-11	METAL CHIP	15K	0.5%	1/10W
R5942	1-208-911-11	METAL CHIP	10K	0.5%	1/16W
R5943	1-218-977-11	METAL CHIP	100K	5%	1/16W
R5960	1-218-989-11	METAL CHIP	1M	5%	1/16W
R5961	1-208-883-81	METAL CHIP	680	0.5%	1/16W
R5962	1-208-911-11	METAL CHIP	10K	0.5%	1/16W
R5963	1-218-853-11	METAL CHIP	1.8K	0.5%	1/10W
R5964	1-208-955-11	METAL CHIP	680K	0.5%	1/16W
R5965	1-208-944-81	METAL CHIP	240K	0.5%	1/16W

Ref. No.	Part No.	Description			
R5966	1-208-911-11	METAL CHIP	10K	0.5%	1/16W
R5967	1-218-970-11	METAL CHIP	27K	5%	1/16W
R5968	1-218-977-11	METAL CHIP	100K	5%	1/16W
R5969	1-218-977-11	METAL CHIP	100K	5%	1/16W
R5970	1-218-973-11	METAL CHIP	47K	5%	1/16W
R5971	1-218-973-11	METAL CHIP	47K	5%	1/16W
R5972	1-218-973-11	METAL CHIP	47K	5%	1/16W
R5973	1-218-973-11	METAL CHIP	47K	5%	1/16W
R5974	1-216-849-11	METAL CHIP	220K	5%	1/10W
R5975	1-216-849-11	METAL CHIP	220K	5%	1/10W
R5976	1-208-894-81	METAL CHIP	2K	0.5%	1/16W
R5981	1-216-817-11	METAL CHIP	470	5%	1/10W
R5982	1-216-817-11	METAL CHIP	470	5%	1/10W
R5983	1-216-817-11	METAL CHIP	470	5%	1/10W
R5984	1-216-817-11	METAL CHIP	470	5%	1/10W
R5985	1-218-977-11	METAL CHIP	100K	5%	1/16W
R5986	1-218-977-11	METAL CHIP	100K	5%	1/16W

Ref. No.	Part No.	Description

3-1. ASSEMBLY

Assembly-1: Confirm the Diopter Adjustment Lever is on the left side when installing the VF Lens Assy.

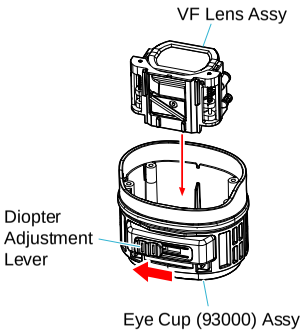

Assembly-2: How to arrange Harnesses (SW-116).

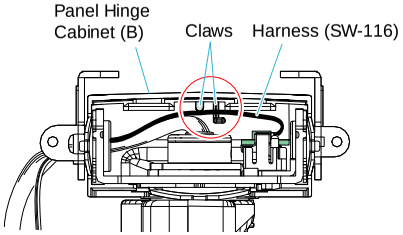

Assembly-3: How to bent the Speaker Grille.

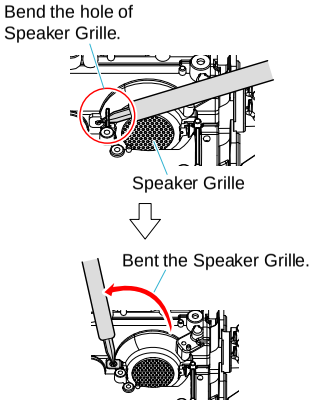

Assembly-4: How to arrange Harnesses and Flexible Board.

The Harness (SW-116) wrap around the Harness (Coaxial cable).

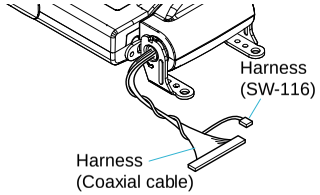

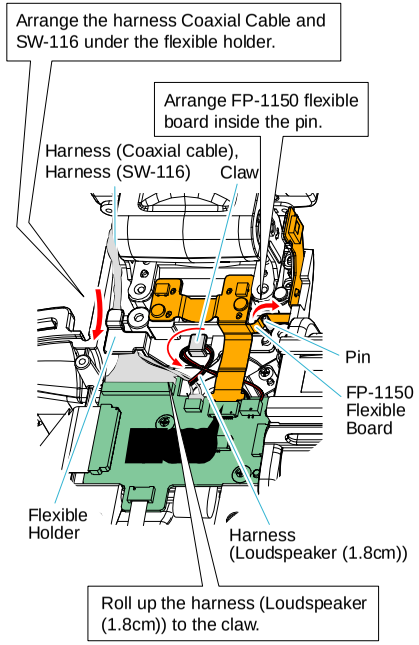

Assembly-5: On installation of the GS-010 Board, adjust the position of the switch. (EXCEPT NX5C/NX5M)

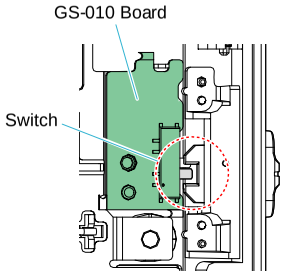

Assembly-6: On installation of the TS-157 Board, adjust the position of the switch.

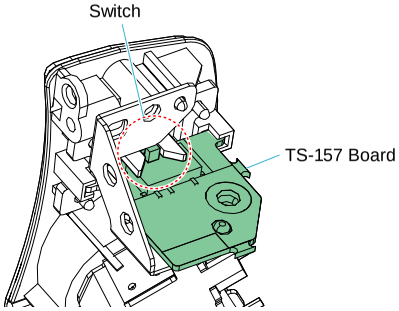

Assembly-7: On installation of the Cabinet (R) section, adjust the position of the ND filter switch.

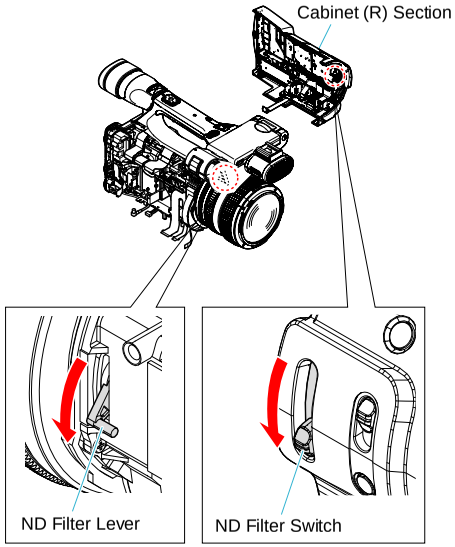

Assembly-8: How to arrange Harness (Coaxial Cable).

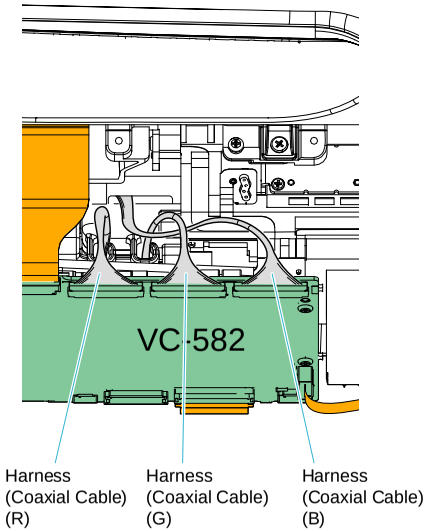

4-1. OVERALL BLOCK DIAGRAM (1/7)

( ) : Number in parenthesis ( ) indicates the division number of schematic diagram where the component is located.

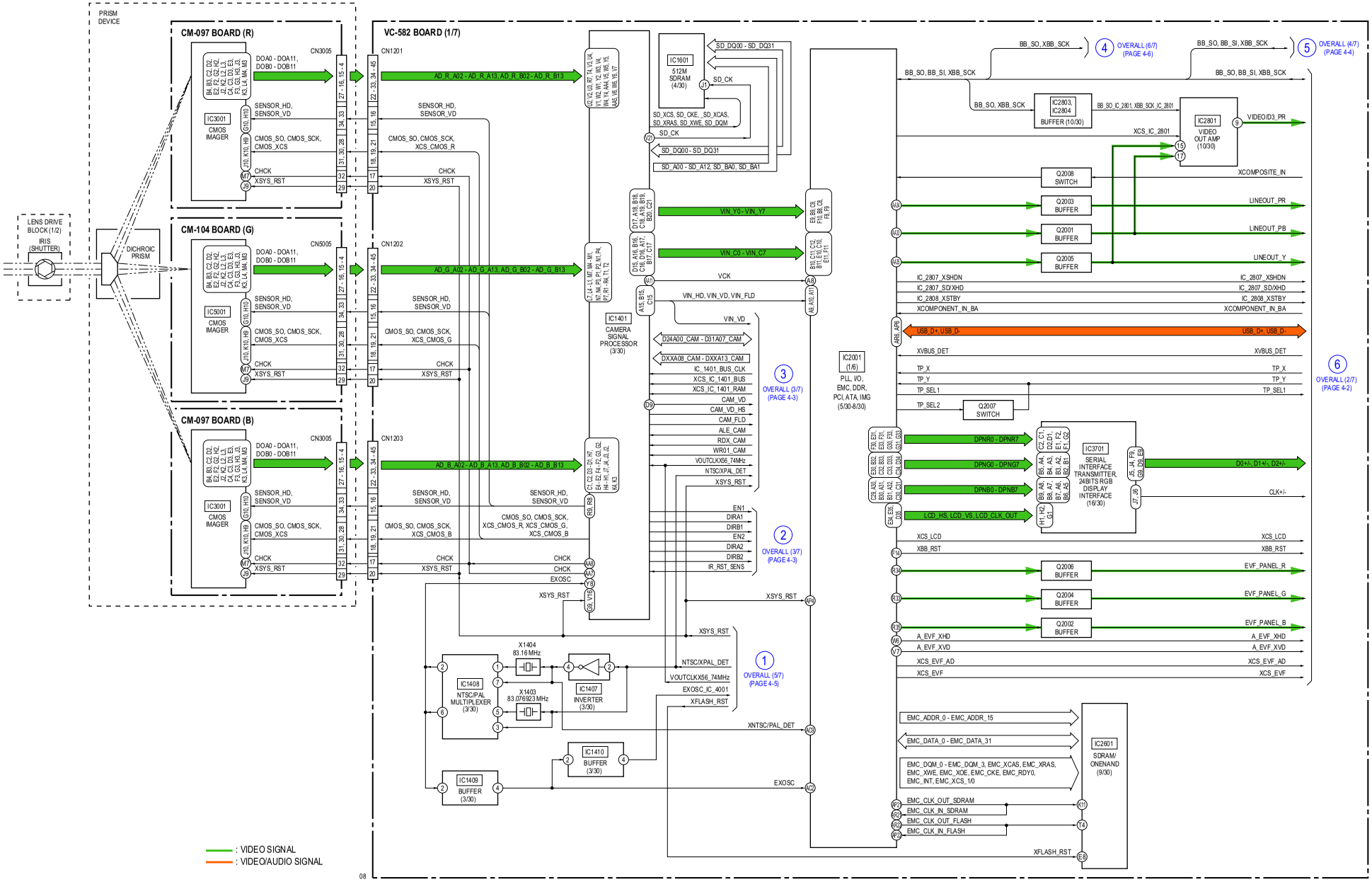

Ver. 1.1 2010.01
The changed portions from
Ver. 1.0 are shown in blue.

4-2. OVERALL BLOCK DIAGRAM (2/7)

( ) : Number in parenthesis ( ) indicates the division number of schematic diagram where the component is located.

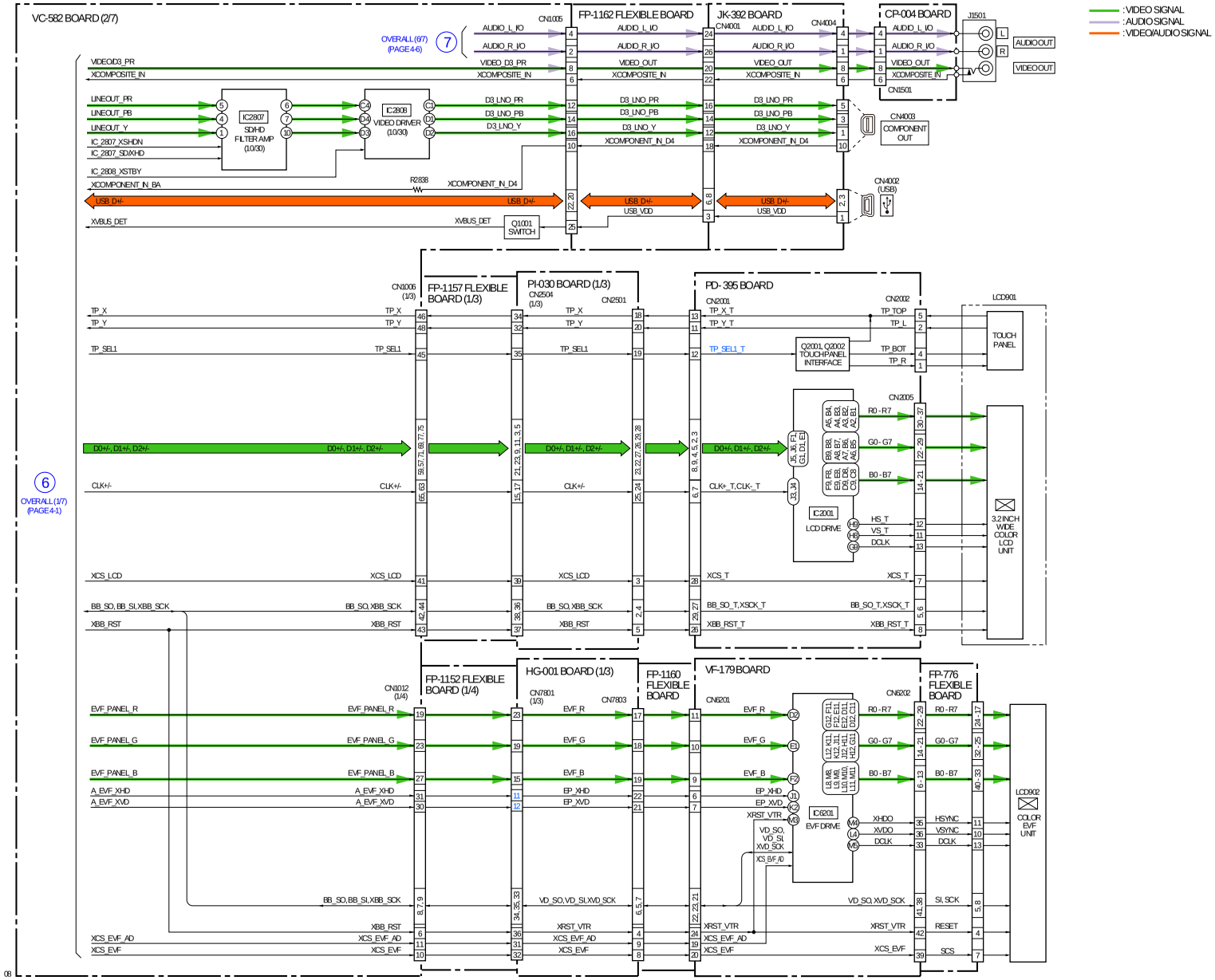

4-3. OVERALL BLOCK DIAGRAM (3/7)

( ) : Number in parenthesis ( ) indicates the division number of schematic diagram where the component is located.

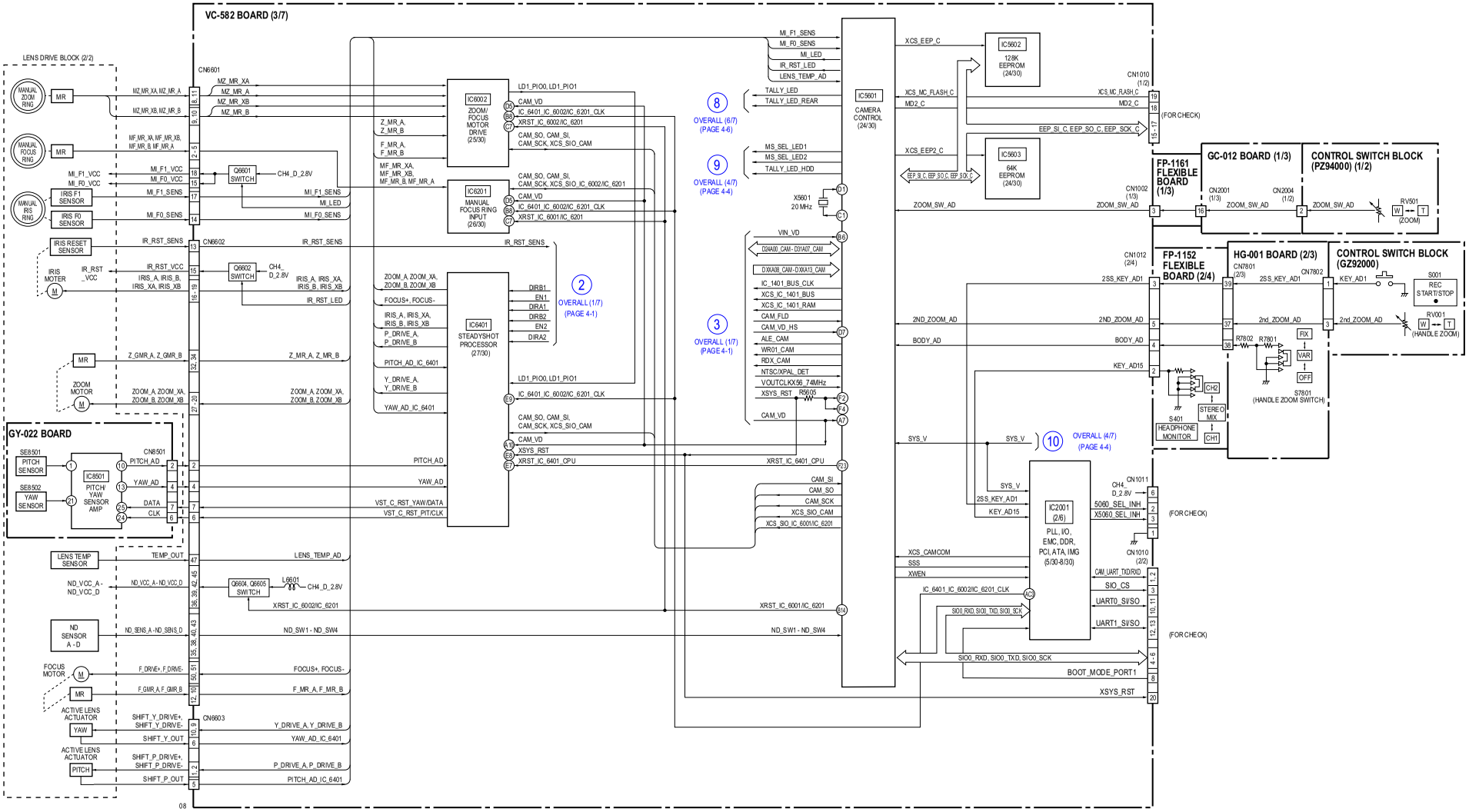

4-4. OVERALL BLOCK DIAGRAM (4/7)

( ) : Number in parenthesis ( ) indicates the division number of schematic diagram where the component is located.

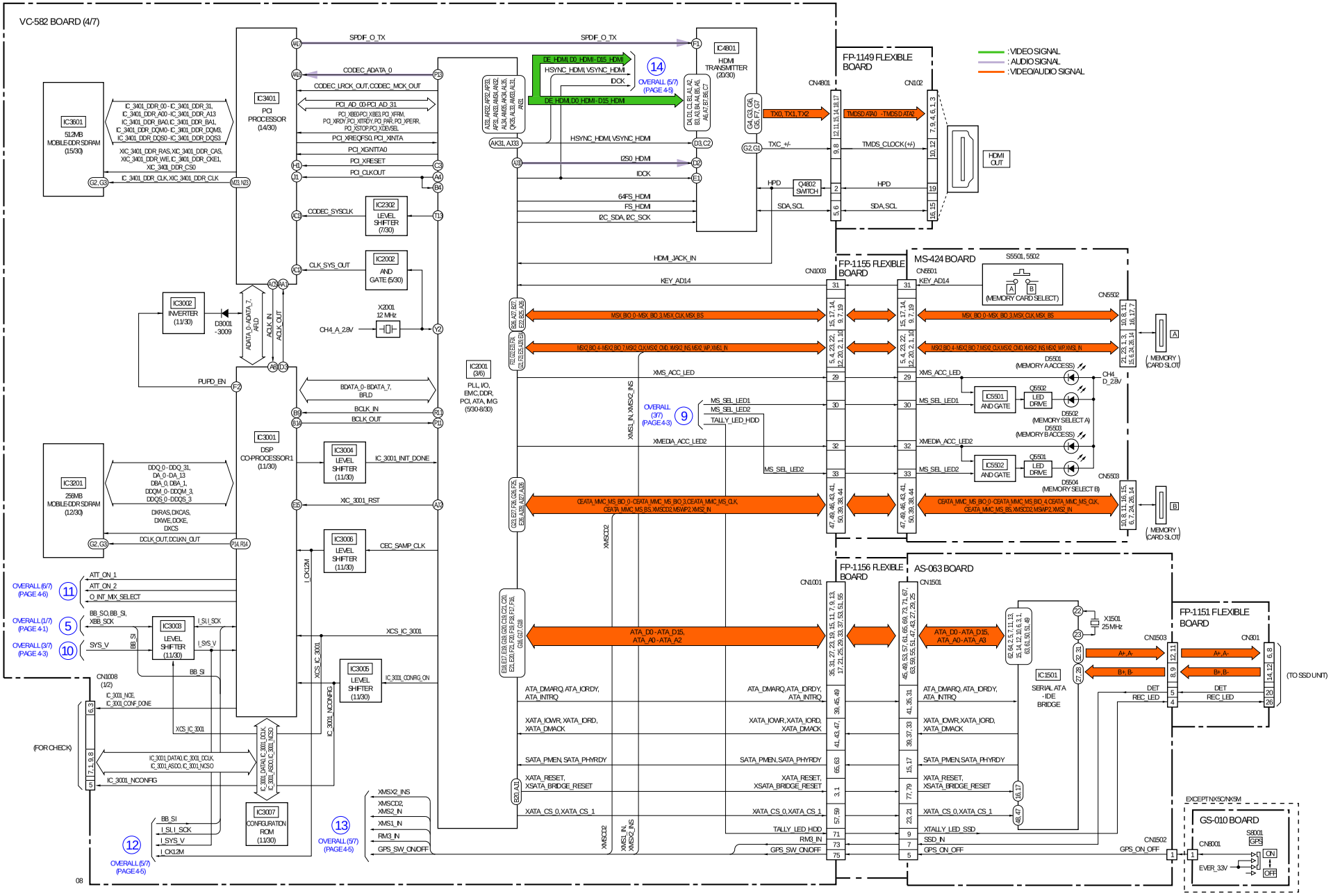

Ver. 1.1 2010.01
The changed portions from
Ver. 1.0 are shown in blue.

4-5. OVERALL BLOCK DIAGRAM (5/7)

( ) : Number in parenthesis ( ) indicates the division number of schematic diagram where the component is located.

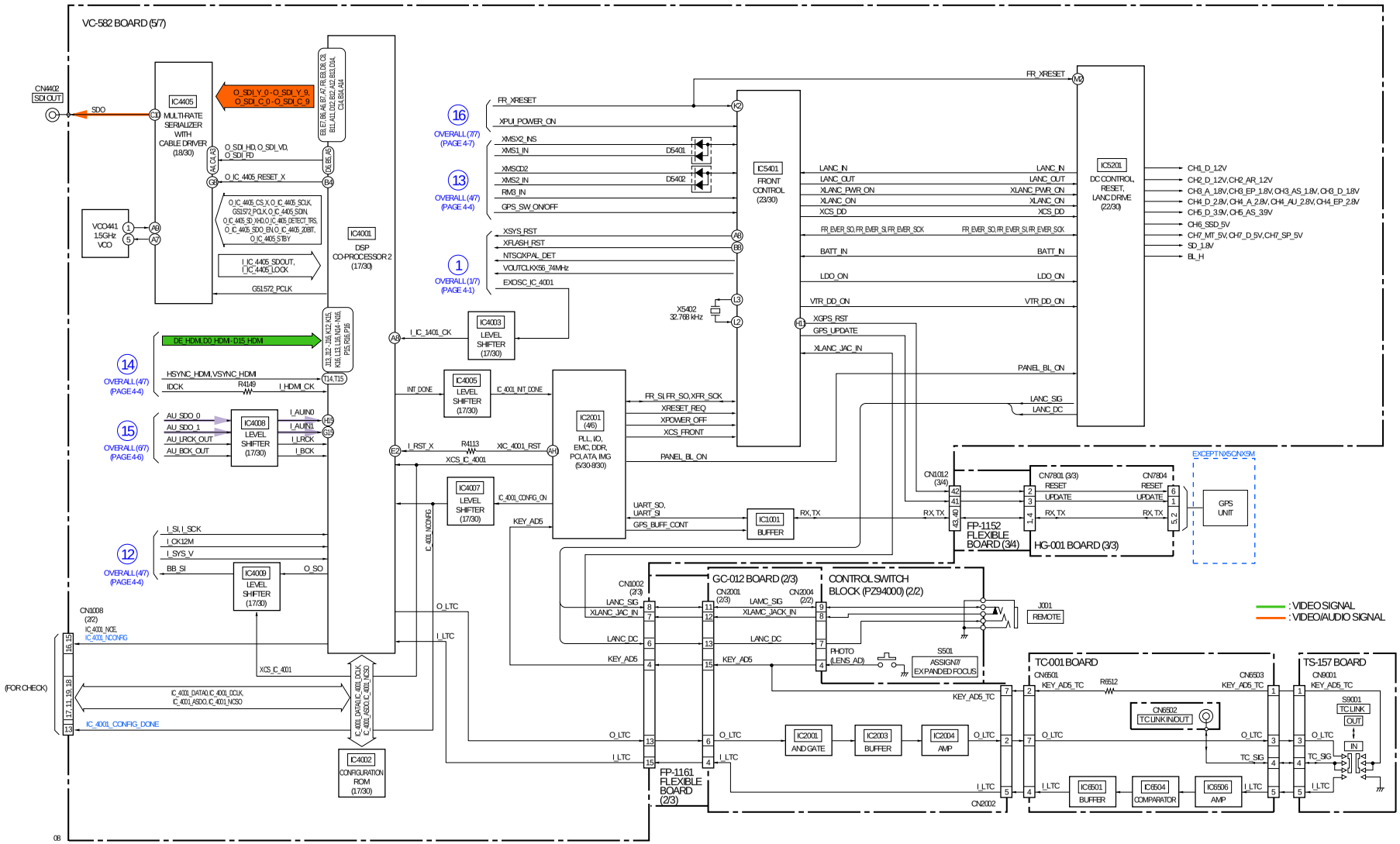

4-6. OVERALL BLOCK DIAGRAM (6/7)

( ) : Number in parenthesis ( ) indicates the division number of schematic diagram where the component is located.

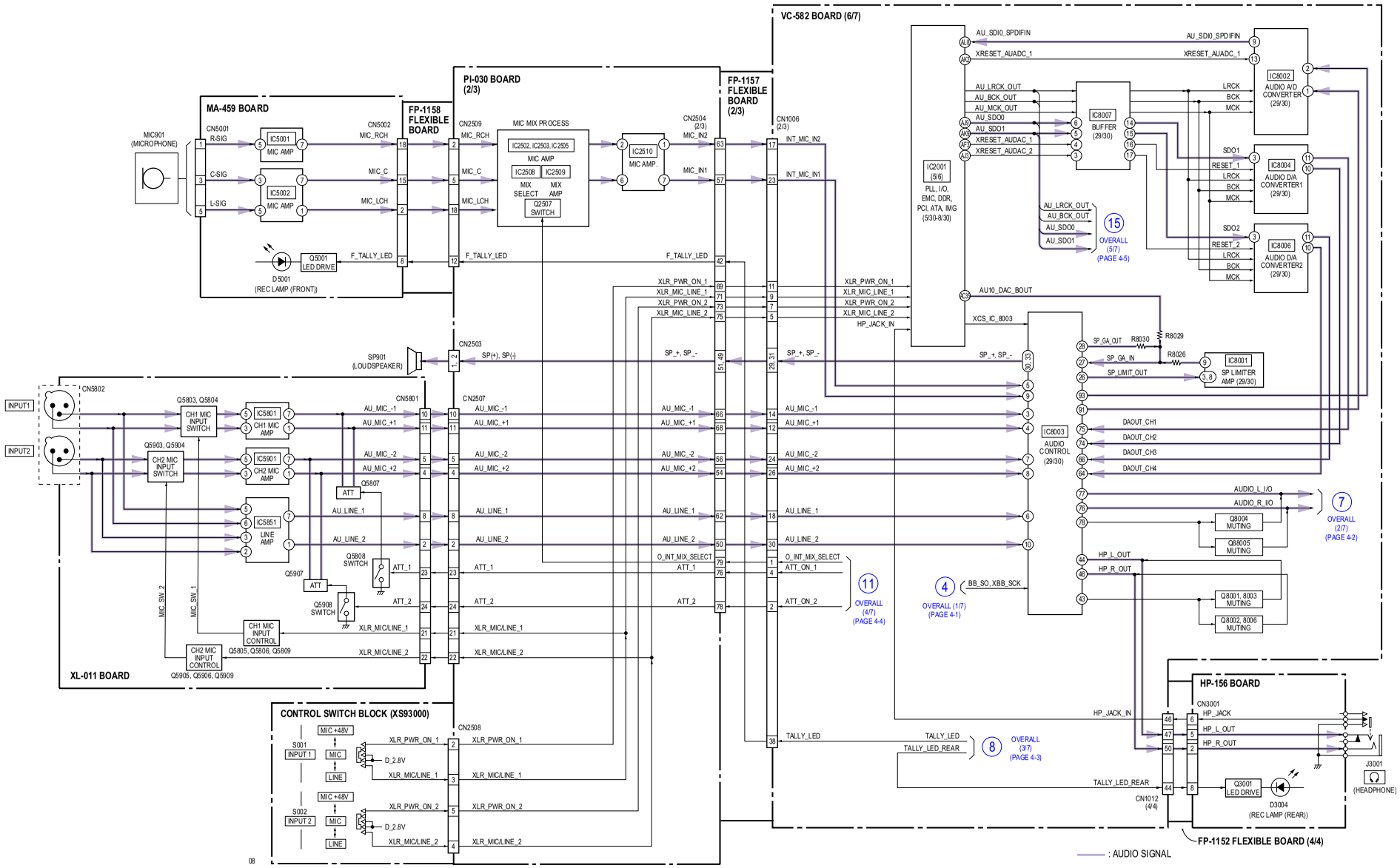

Ver. 1.1 2010.01
The changed portions from
Ver. 1.0 are shown in blue.

4-7. OVERALL BLOCK DIAGRAM (7/7)

( ) : Number in parenthesis ( ) indicates the division number of schematic diagram where the component is located.

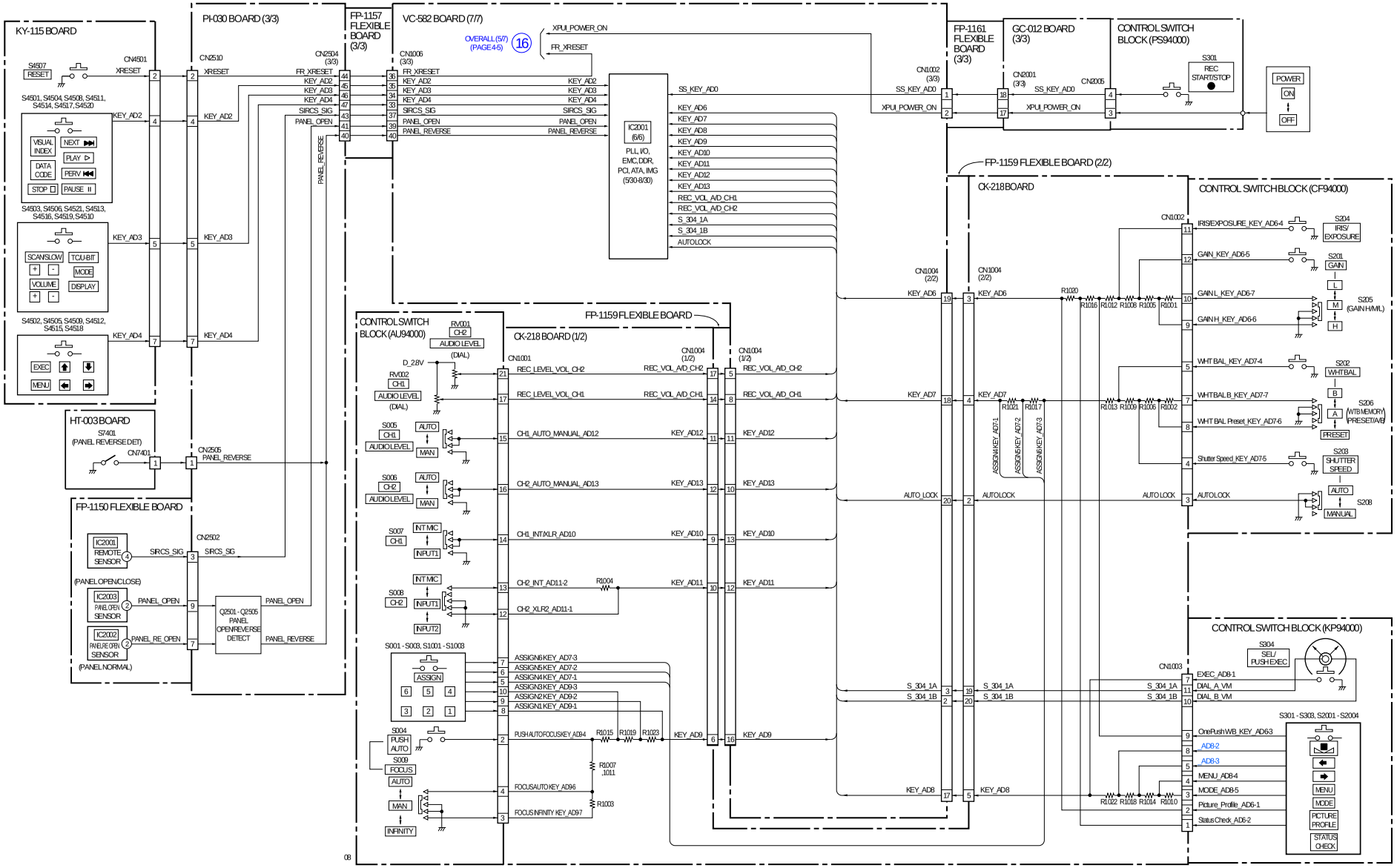

Ver. 1.1 2010.01
The changed portions from
Ver. 1.0 are shown in blue.

4-8. POWER BLOCK DIAGRAM (1/4)

( ) : Number in parenthesis ( ) indicates the division number of schematic diagram where the component is located.

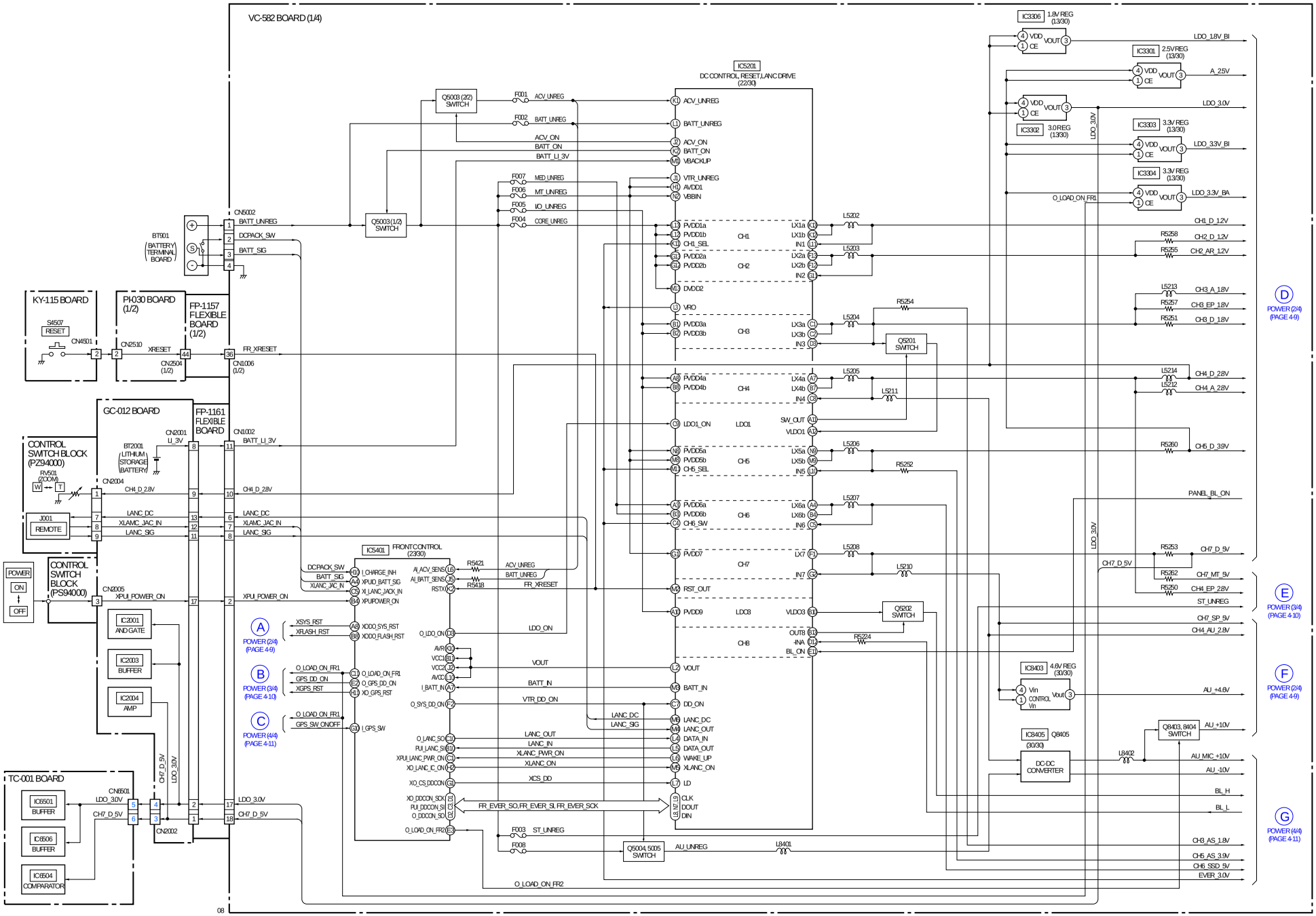

4-9. POWER BLOCK DIAGRAM (2/4)

( ) : Number in parenthesis ( ) indicates the division number of schematic diagram where the component is located.

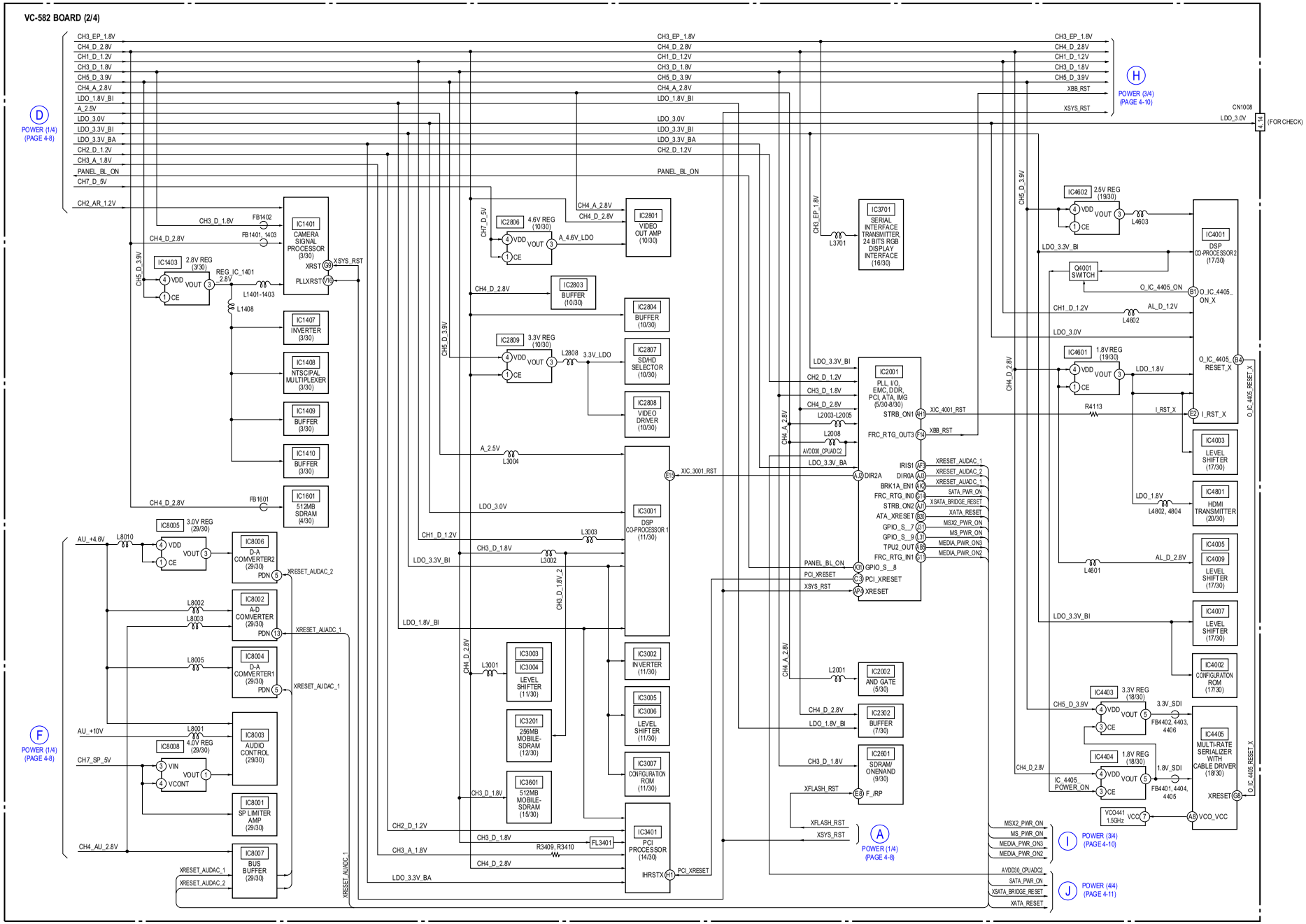

4-10. POWER BLOCK DIAGRAM (3/4)

( ) : Number in parenthesis ( ) indicates the division number of schematic diagram where the component is located.

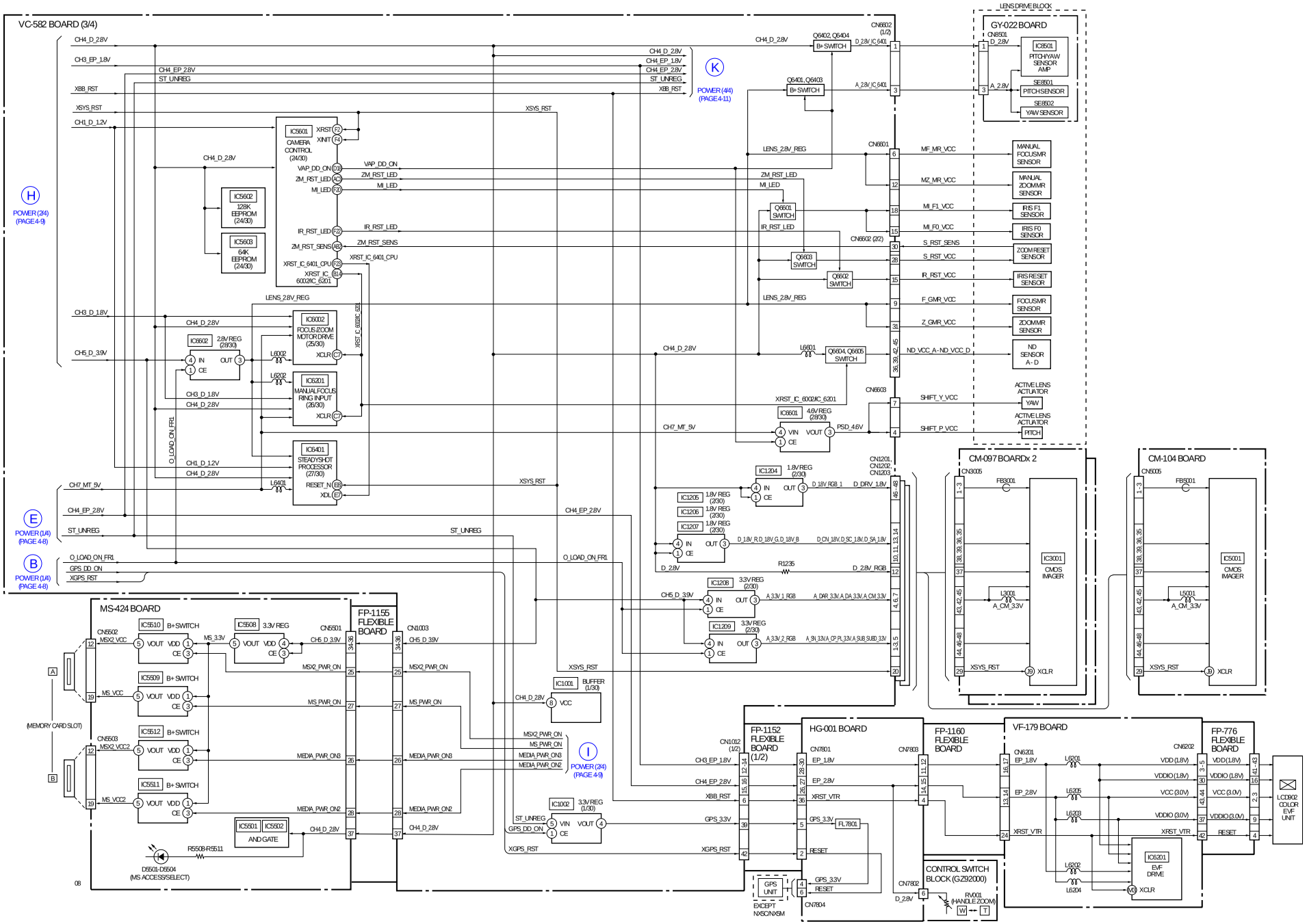

Ver. 1.1 2010.01
The changed portions from
Ver. 1.0 are shown in blue.

4-11. POWER BLOCK DIAGRAM (4/4)

( ) : Number in parenthesis ( ) indicates the division number of schematic diagram where the component is located.

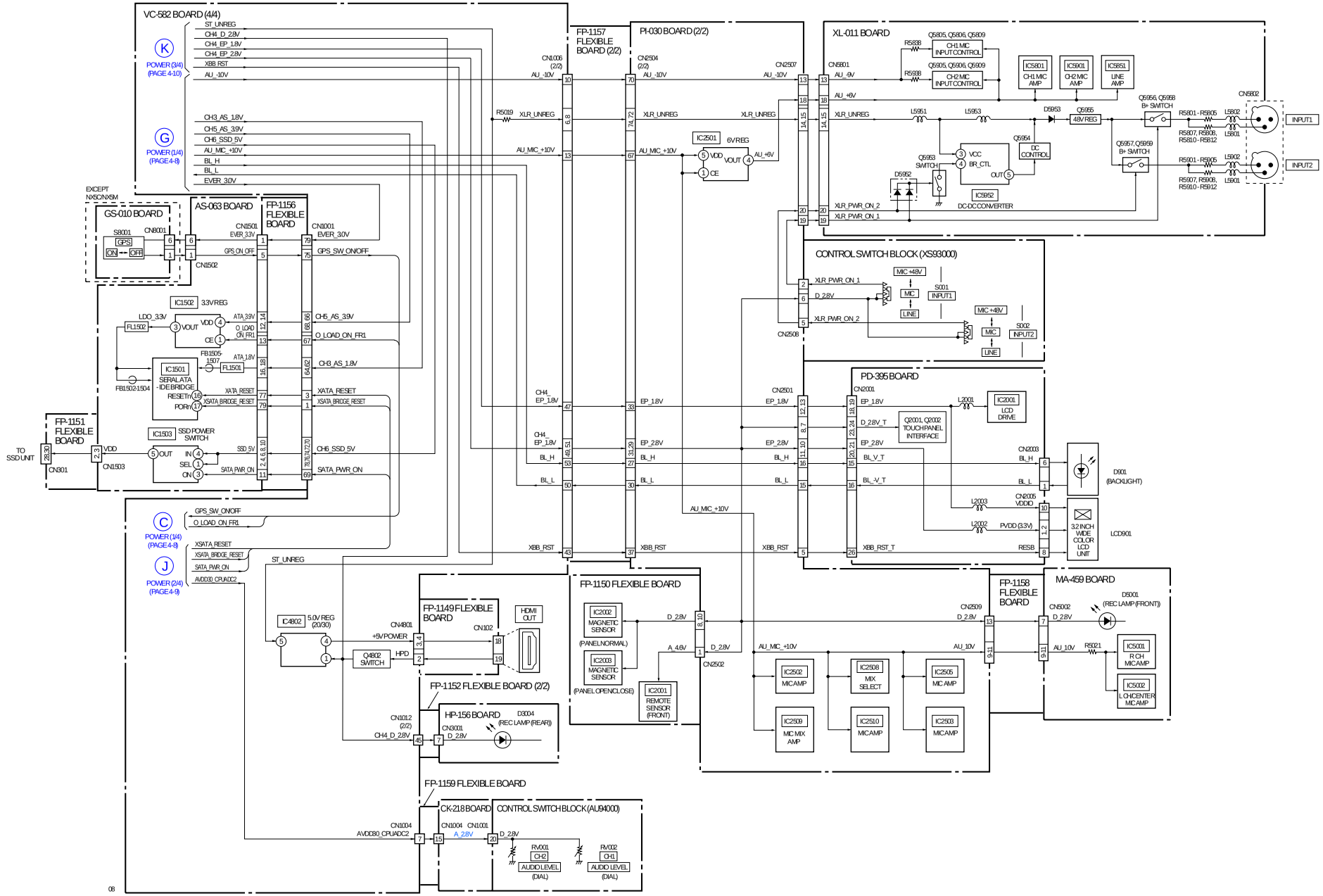

Ver. 1.1 2010.01
The changed portions from
Ver. 1.0 are shown in blue.

5. FRAME SCHEMATIC DIAGRAMS

FRAME SCHEMATIC DIAGRAM (1/2)

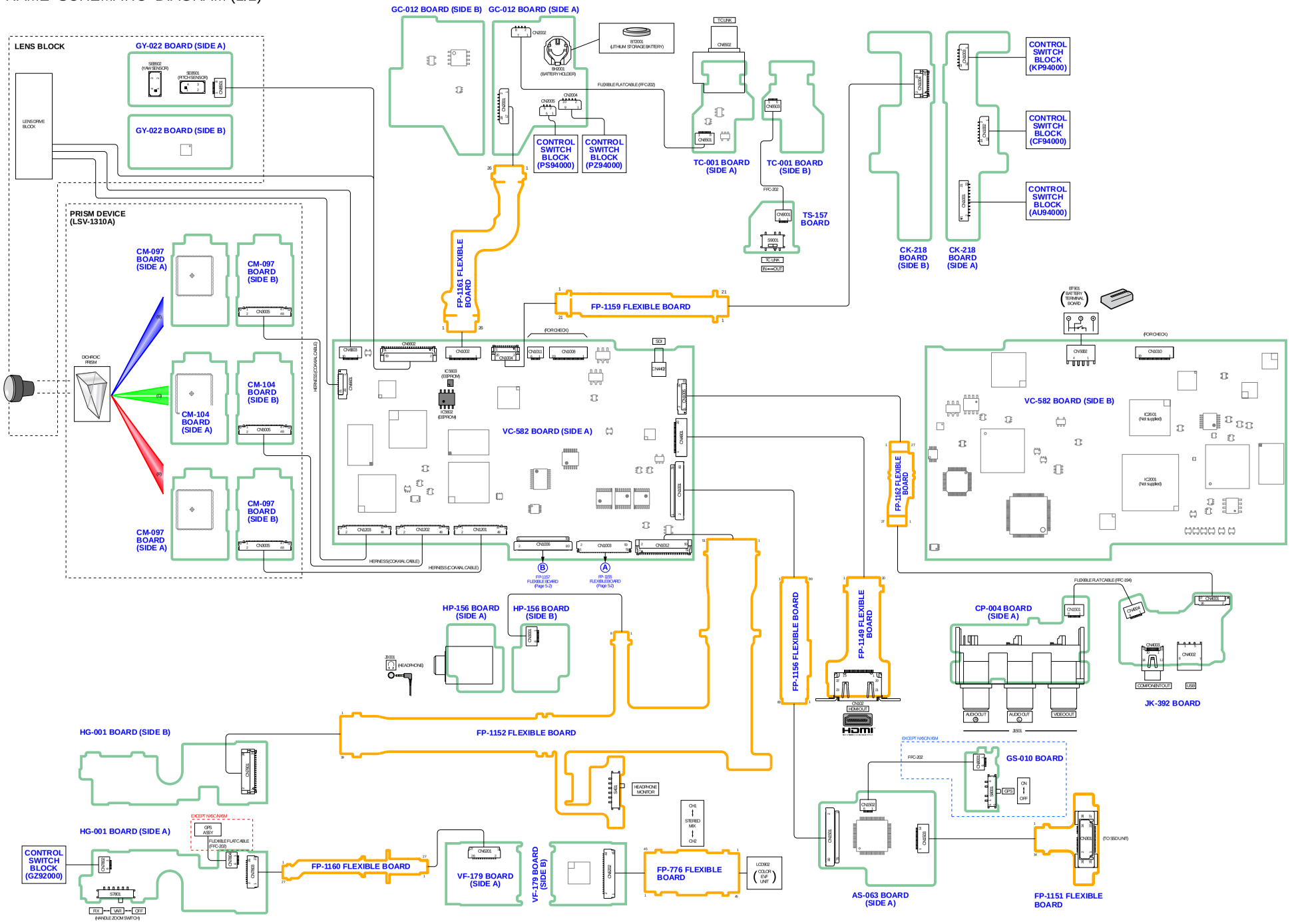

Ver. 1.1 2010.01
The changed portions from
Ver. 1.0 are shown in blue.

FRAME SCHEMATIC DIAGRAM (2/2)

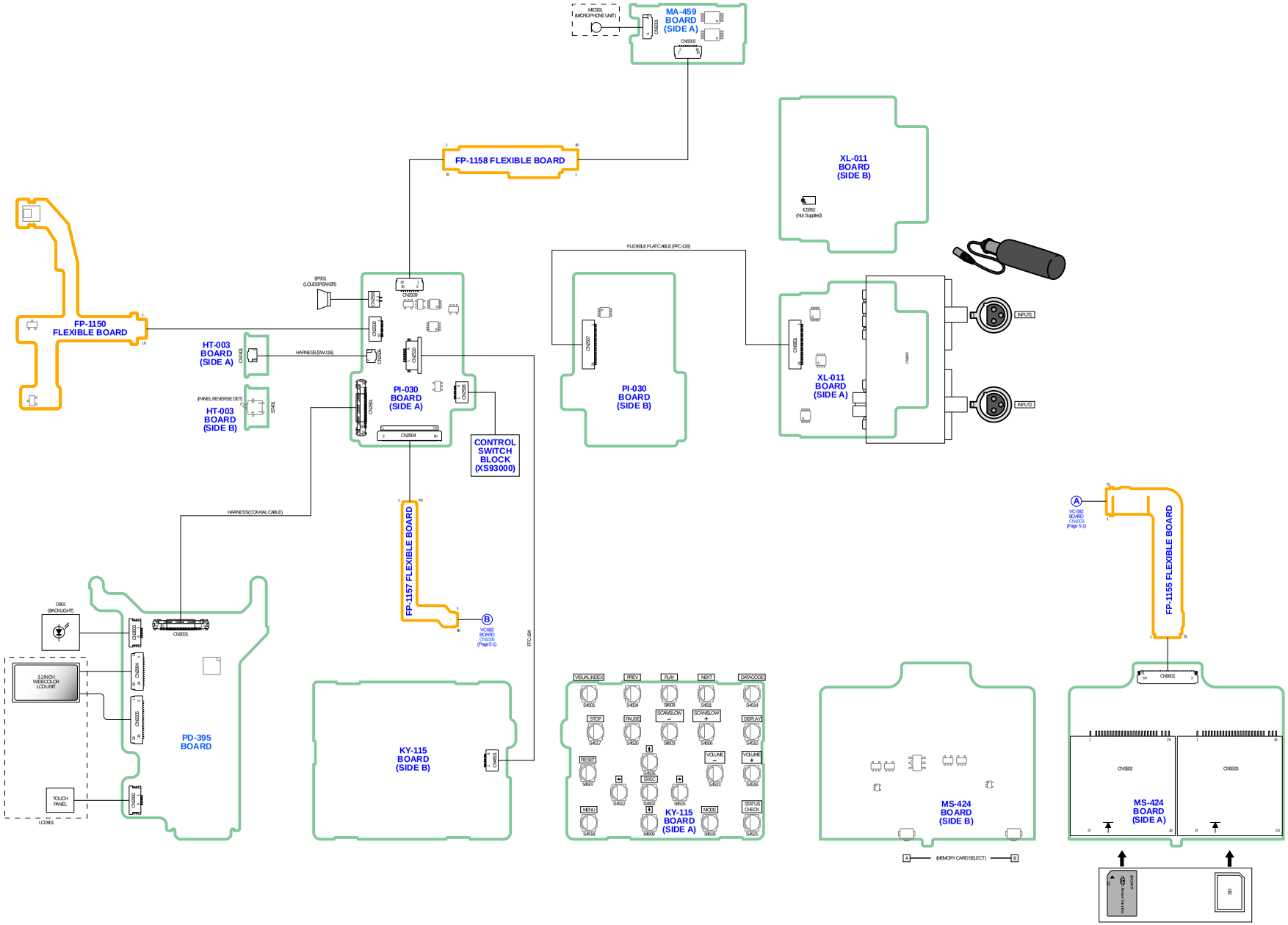

– ENGLISH –

THIS NOTE IS COMMON FOR SCHEMATIC DIAGRAMS AND PRINTED WIRING BOARDS.
(In addition to this, the necessary note is printed in each block.)

For Schematic Diagrams

- All capacitors are in μF unless otherwise noted. pF : μμF. 50 V or less are not indicated except for electrolytics and tantalums.
- Chip resistors are 1/10 W unless otherwise noted. kΩ=1000 Ω, MΩ=1000 kΩ.
- Caution when replacing chip parts. New parts must be attached after removal of chip. Be careful not to heat the minus side of tantalum capacitor, Because it is damaged by the heat.
- Some chip part will be indicated as follows.
  Example C541 L452
  22U 10UH
  TA A 2520
  Kinds of capacitor — Case size — External dimensions (mm)
- Constants of resistors, capacitors, ICs and etc with XX indicate that they are not used. In such cases, the unused circuits may be indicated.
- Parts with ★ differ according to the model/destination. Refer to the mount table for each function.
- All variable and adjustable resistors have characteristic curve B, unless otherwise noted.
- Signal name
  XEDIT → $\overline{\text{EDIT}}$ PB/XREC → PB/$\overline{\text{REC}}$
- : non flammable resistor
- : fusible resistor
- : panel designation
- : B+ Line
- : B– Line
- : IN/OUT direction of (+, –) B LINE.
- : adjustment for repair.

Precautions for Replacement of Imager
- If the imager has been replaced, carry out all the adjustments for the camera section.
- As the imager may be damaged by static electricity from its structure, handle it carefully like for the MOS IC. In addition, ensure that the receiver is not covered with dusts nor exposed to strong light.

When indicating parts by reference number, please include the board name.

The components identified by mark ⚠ or dotted line with mark ⚠ are critical for safety.
Replace only with part number specified.

Les composants identifiés par une marque ⚠ sont critiques pour la sécurité.
Ne les remplacer que par une pièce portant le numéro spécifié.

For Printed Wiring Boards

- : Uses unleaded solder.
- : Circuit board
- : Flexible board
  Pattern from the side which enables seeing.
  : pattern of the rear side
  (The other layers' patterns are not indicated)
- Through hole is omitted.
- There are a few cases that the part printed on diagram isn't mounted in this model.
- : panel designation

- Chip parts.
  Transistor

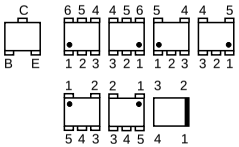

Diode

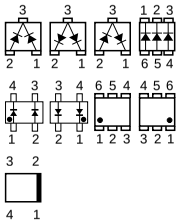

– JAPANESE –

回路図，プリント図共通ノート
（他に必要なノートは各セクションに記載しています）

回路図ノート

- ケミコン，タンタルを除くコンデンサで，耐圧50 以下のものはその耐圧を省略。単位はすべてμF（pはpF）。
- チップ抵抗で指示のないものは，1 / 以下。
  Ω=1 0 Ω，MΩ=1 0 Ω
- チップ部品交換時の注意
  取り外した部品は再使用せず，未使用の部品をご使用ください。
  タンタルコンデンサのマイナス側は熱に弱いため注意してください。
- チップ部品には下記のように表示したものがあります。
  例 L
  520
  種類 — ケースサイズ — 外形寸法（mm）
- 抵抗，コンデンサ，I など定数にXXがあるものは，使用していない事を示しています。このため，使用していない回路が記載されている事があります。
- ★印のある部品は，機種などにより異なりますので機能別マウント一覧表を参照してください。
- 可変抵抗と半固定抵抗で，特性の表示を省略。
- 信号名表記について，下記のような場合があります。
  → E P → P
- は不燃性抵抗。
- はヒューズ抵抗。
- はパネル表示名称。
- はB+ライン。
- はB–ライン。
- はBラインの入出力方向を示す。
- は調整名称。

イメージャ交換時の注意
- イメージャを交換した場合は，カメラ部の全調整を行ってください。
- イメージャは構造上，静電気により破壊される恐れがあるため，MOS同様に注意して取り扱ってください。
  また，受光部にはゴミの付着，および強い光がはいることのないように注意してください。

お願い
図面番号で部品を指定するときは基板名又はブロックを併せて指定してください。

⚠印の部品，または⚠印付の点線で囲まれた部品は，安全性を維持するために，重要な部品です。
従って交換時は，必ず指定の部品を使用してください。

プリント図ノート

- ：無鉛半田を使用しています。
- ：基板
  ：フレキシブル配線板
  見ている面側のパターン。
  ：裏側のパターン
  （他のパターンについては表示されていません）
- スルーホールは省略。
- プリント図には，本機で使用していない部品が記載されている場合があります。
- はパネル表示名称。

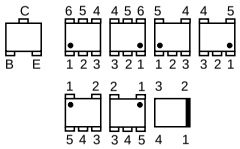

Di

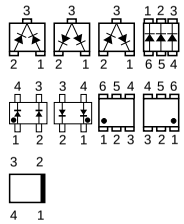

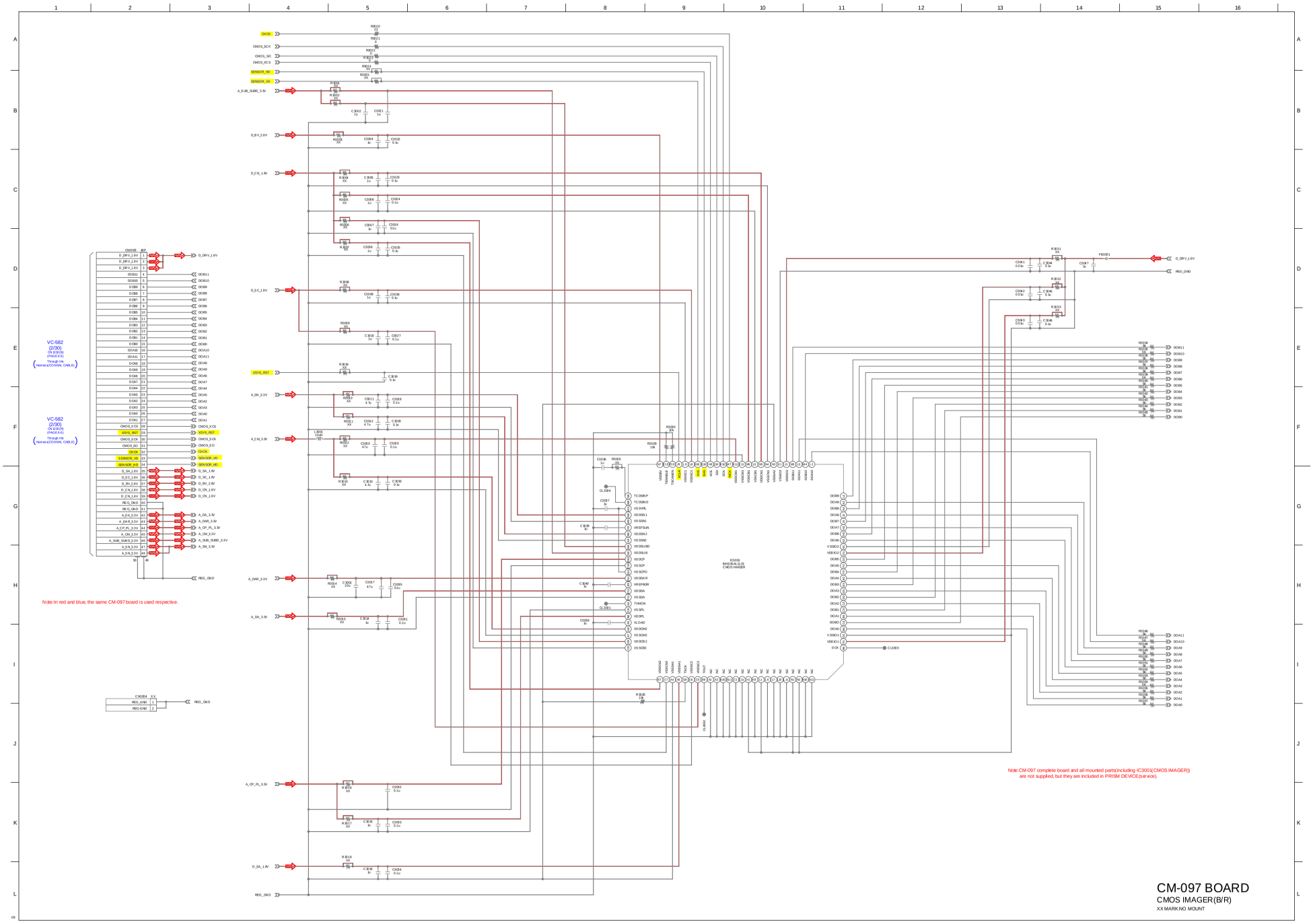
CM-097 BOARD
CMOS IMAGER(B/R)
XX MARK NO MOUNT
Note:CM-097 complete board and all mounted parts(including IC3001(CMOS IMAGER)) are not supplied, but they are included in PRISM DEVICE(service).
Note:In red and blue, the same CM-097 board is used respective.
VC-582 (2/30)
VC-582 (2/30)
IC3001 8K60(B/A) CLB CMOS IMAGER

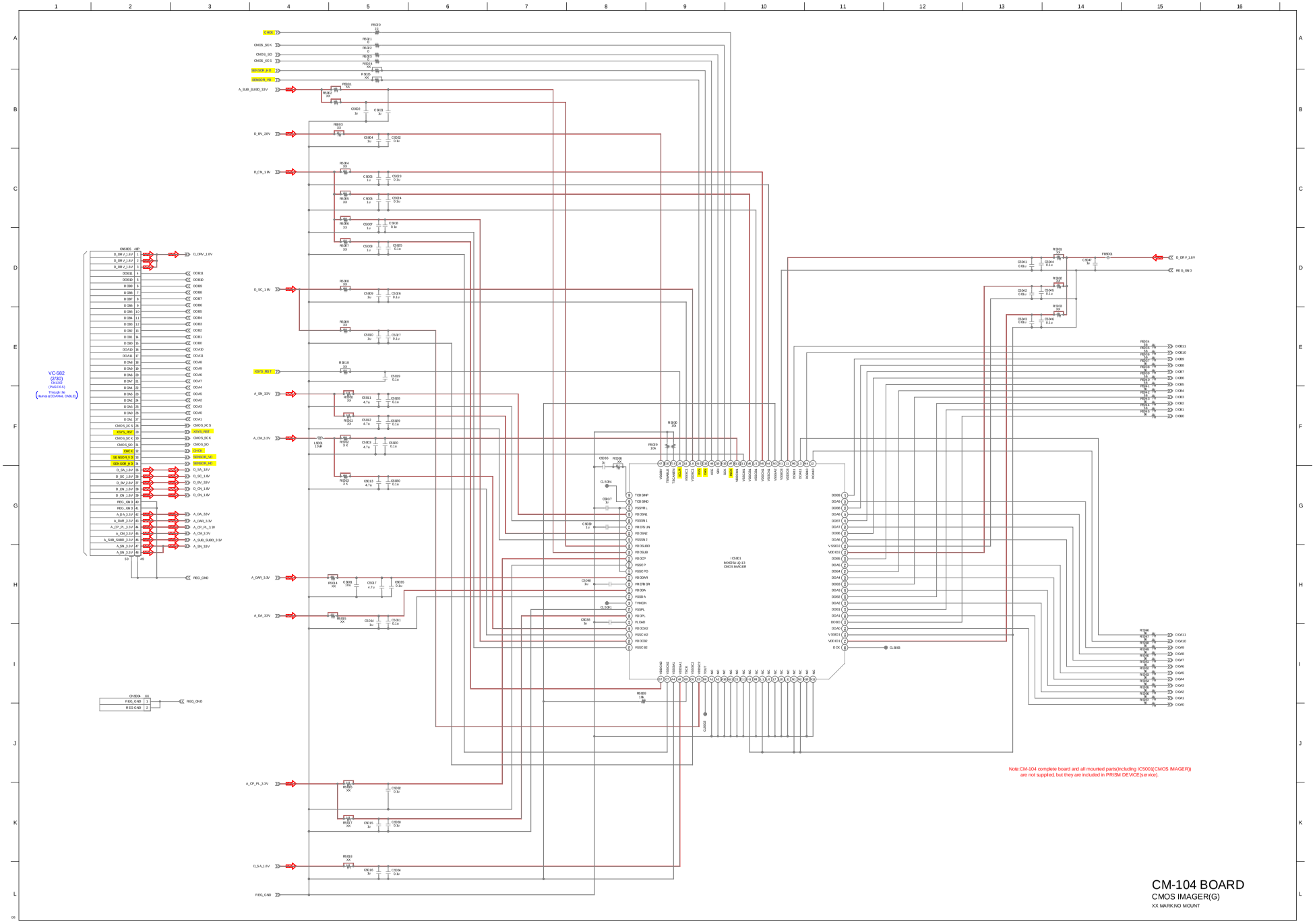
VC-582
(2/30)
PN1158
(PAGE 6-8)
Through the
(Serial ECOAXIAL CABLE)
CM-104 BOARD
CMOS IMAGER(G)
XX MARK:NO MOUNT
Note:CM-104 complete board and all mounted parts(including IC5001(CMOS IMAGER))
are not supplied, but they are included in PRISM DEVICE(Service).

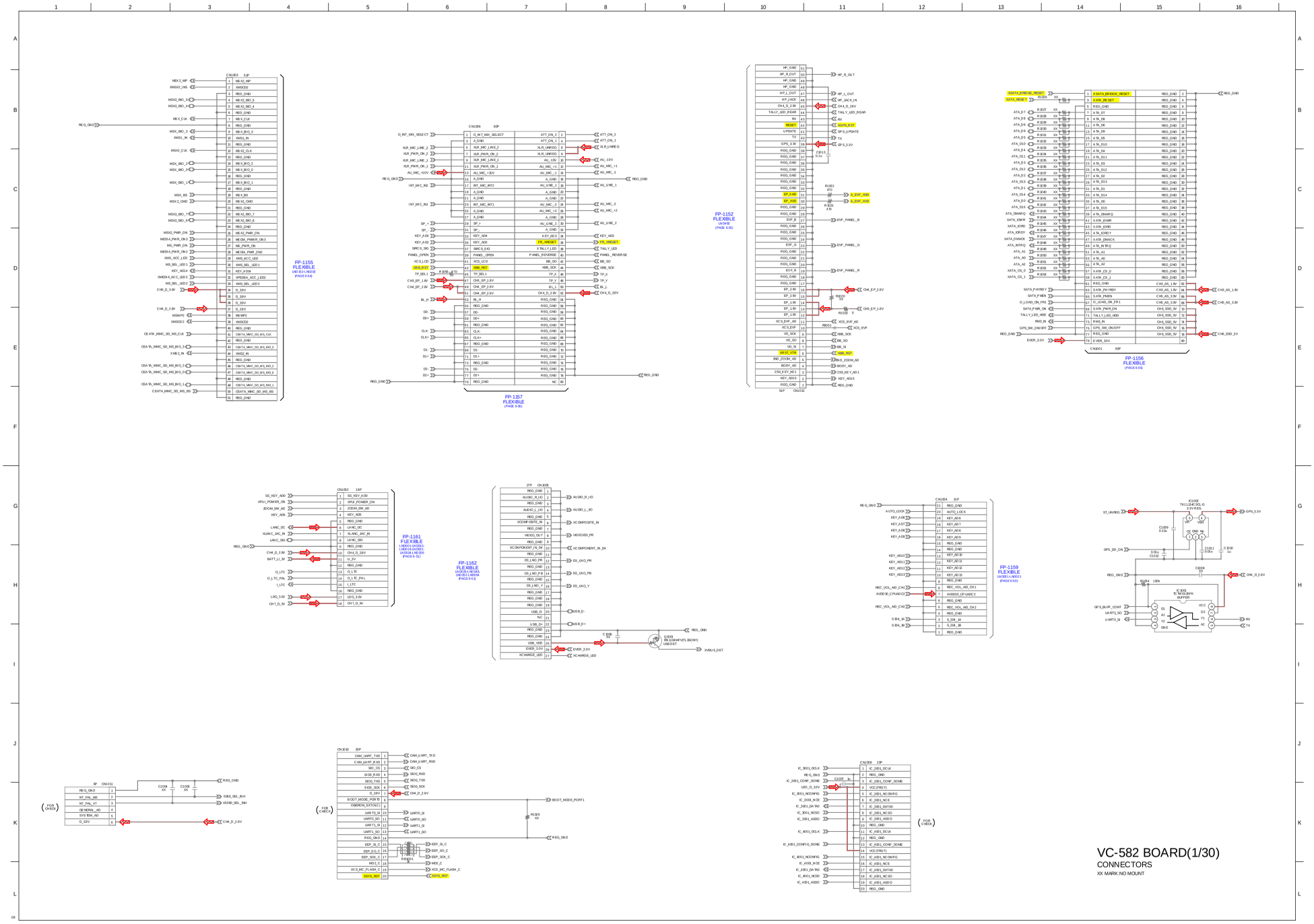
FP-1155 FLEXIBLE
FP-1157 FLEXIBLE
FP-1152 FLEXIBLE
FP-1156 FLEXIBLE
FP-1161 FLEXIBLE
FP-1162 FLEXIBLE
FP-1159 FLEXIBLE
VC-582 BOARD(1/30)
CONNECTORS
XX MARK:NO MOUNT

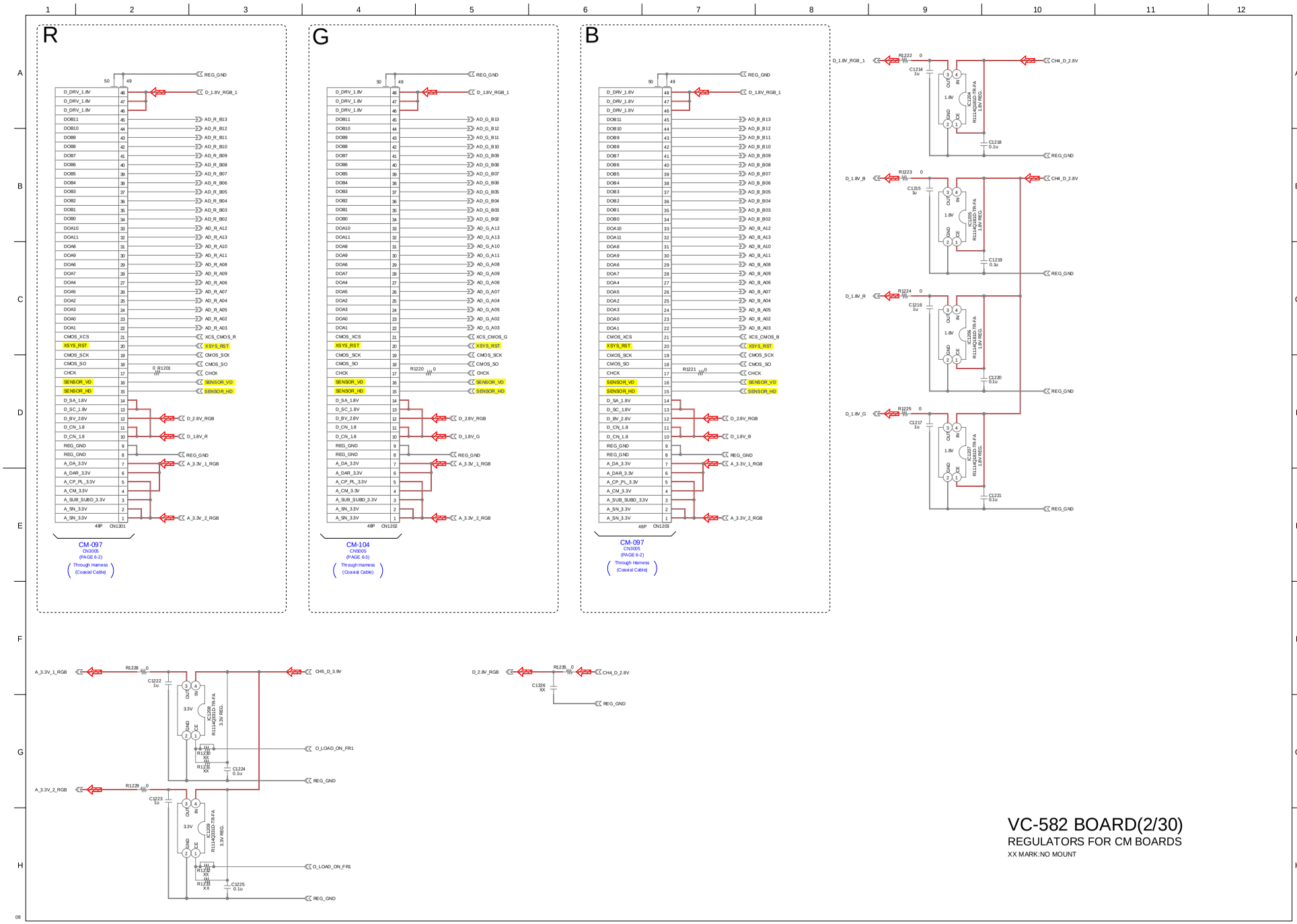
R
G
B
CM-097
CN3005
(PAGE 6-2)
Through Harness
(Coaxial Cable)
CM-104
CN9005
(PAGE 6-3)
Through Harness
(Coaxial Cable)
CM-097
CN3005
(PAGE 6-2)
Through Harness
(Coaxial Cable)
VC-582 BOARD(2/30)
REGULATORS FOR CM BOARDS
XX MARK:NO MOUNT

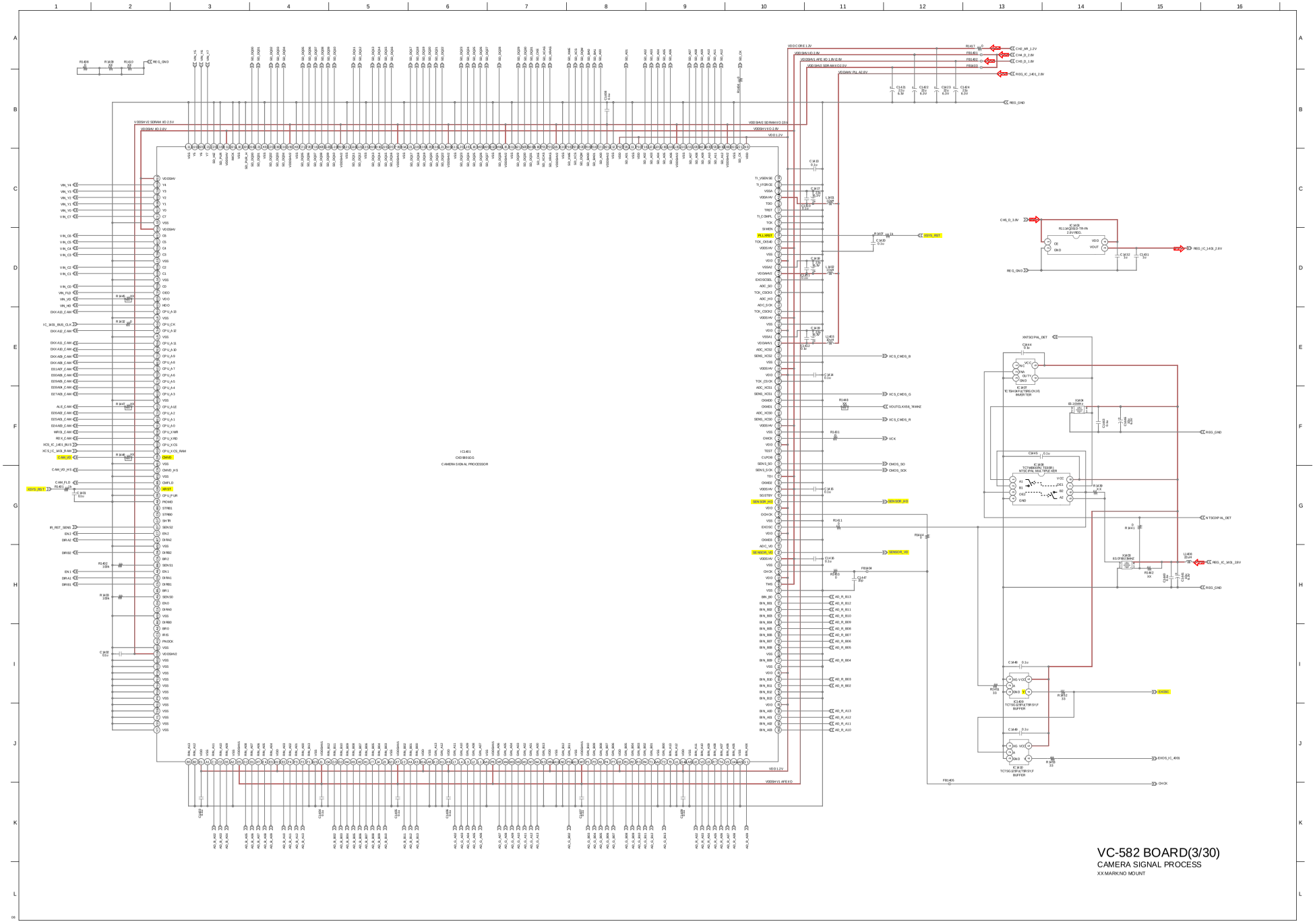
VC-582 BOARD(3/30)
CAMERA SIGNAL PROCESS
XX MARK NO MOUNT

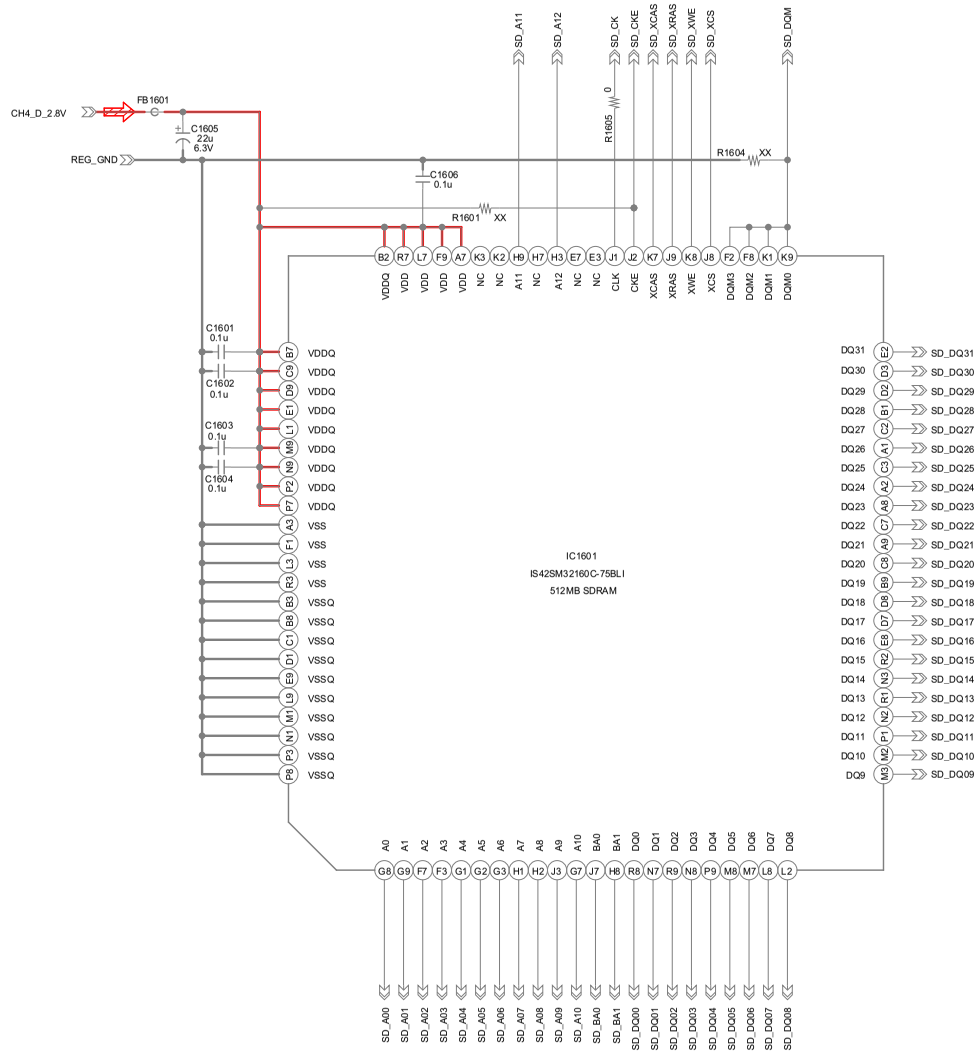

VC-582 BOARD(4/30)

SDRAM FOR IC1401

XX MARK:NO MOUNT

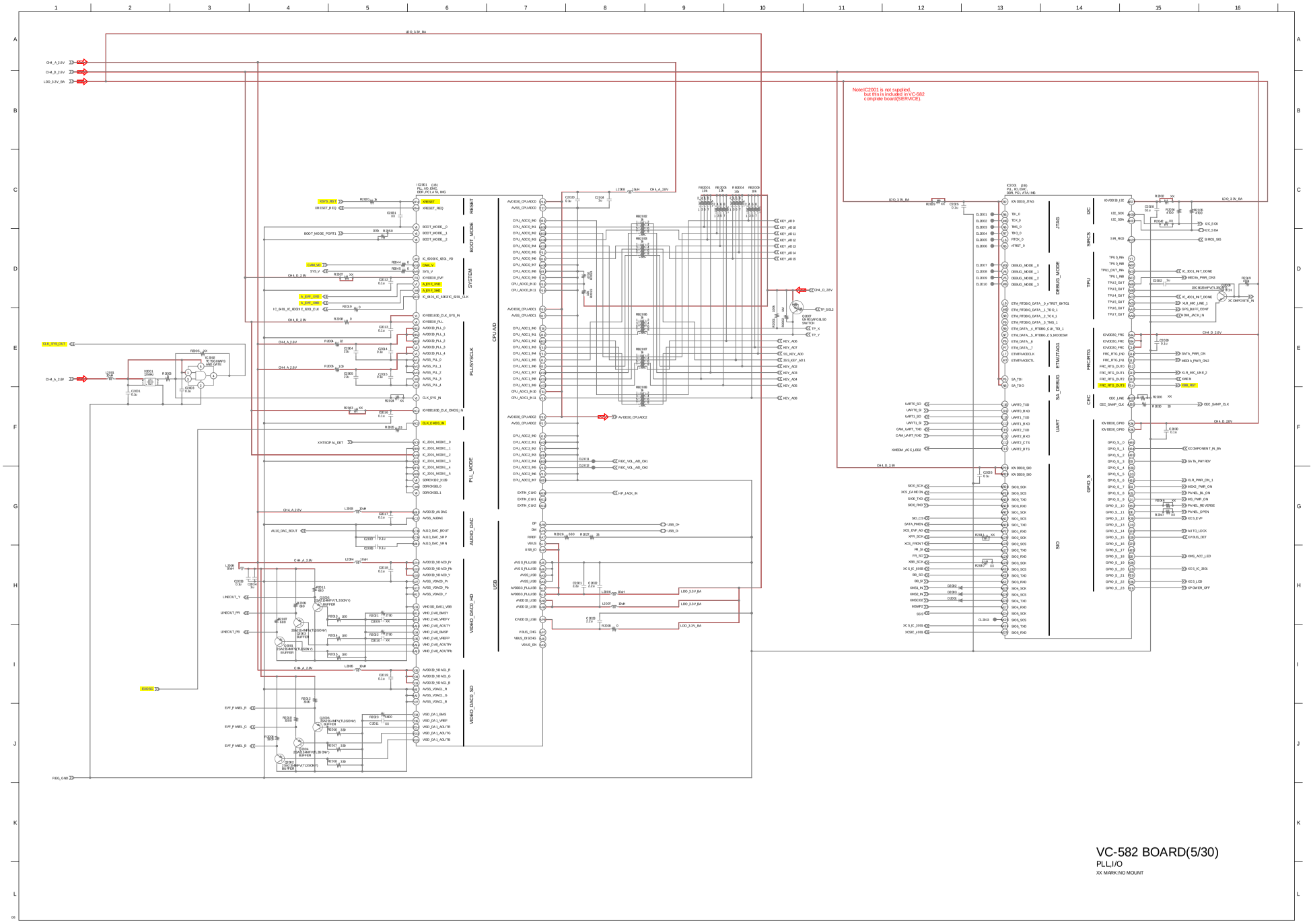
Note:IC2001 is not supplied, but this is included in VC-582 complete board(SERVICE).
RESET
BOOT_MODE
SYSTEM
PLL/SYSCLK
PLL_MODE
AUDIO_DAC
VIDEO_DAC0_HD
VIDEO_DAC0_SD
CPU_AD
USB
JTAG
DEBUG_MODE
ETM/JTAG1
SA_DEBUG
UART
SIO
I2C
SIRCS
TPU
FRC/RTG
CEC
GPIO_S
VC-582 BOARD(5/30)
PLL,I/O
XX MARK:NO MOUNT

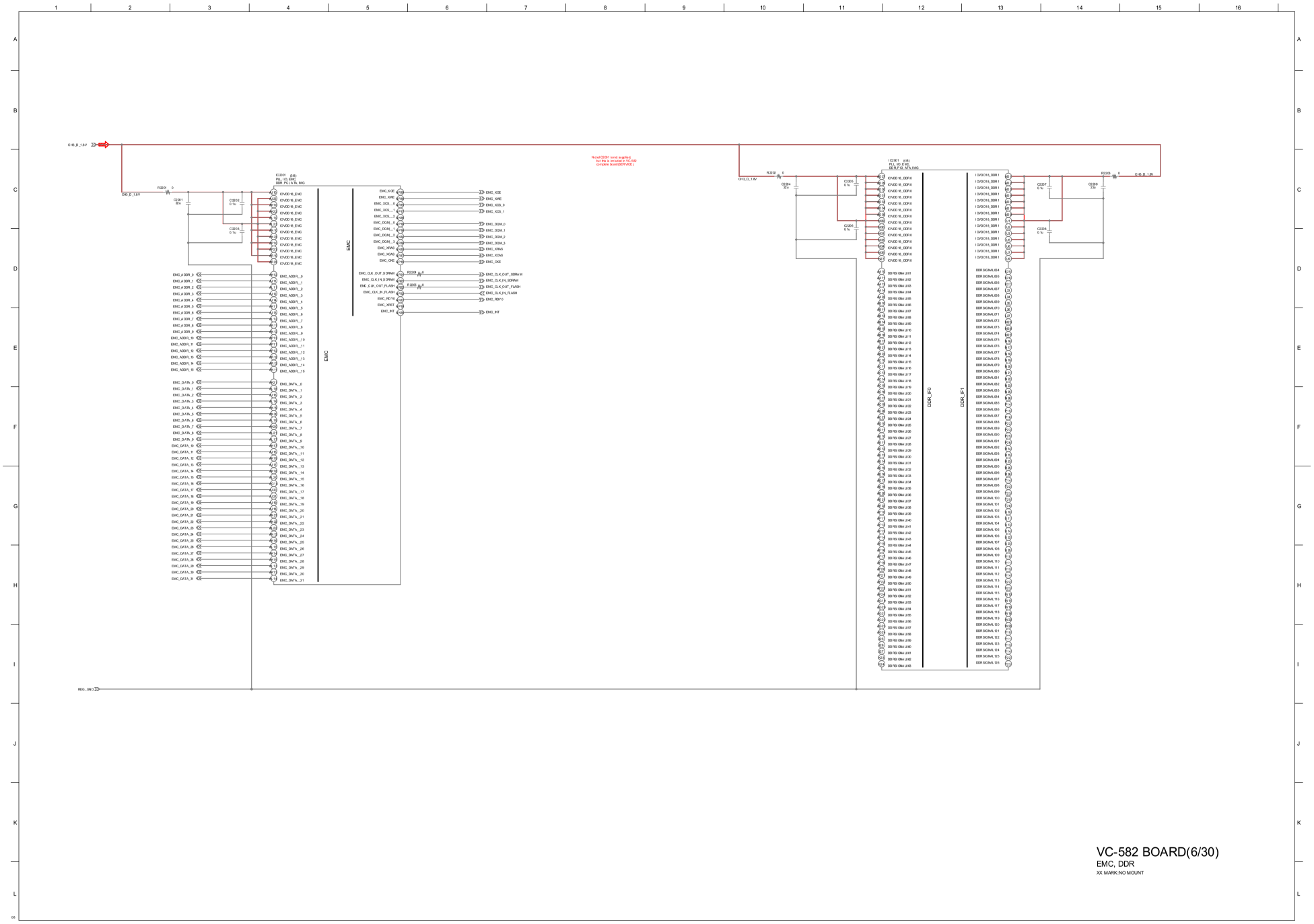
CH3_D_1.8V
REG_GND
IC2001 (1/8)
PLL, I/O, EMC,
DDR, PCI, A VB, BIAS
EMC
IC2001 (4/8)
PLL, I/O, EMC,
DEFLFG, ATA,1394G
DDR_IF0
DDR_IF1
Noted IC2001 is not supplied
but this is included in VC-582
complete board(SERVICE)
VC-582 BOARD(6/30)
EMC, DDR
XX MARK:NO MOUNT

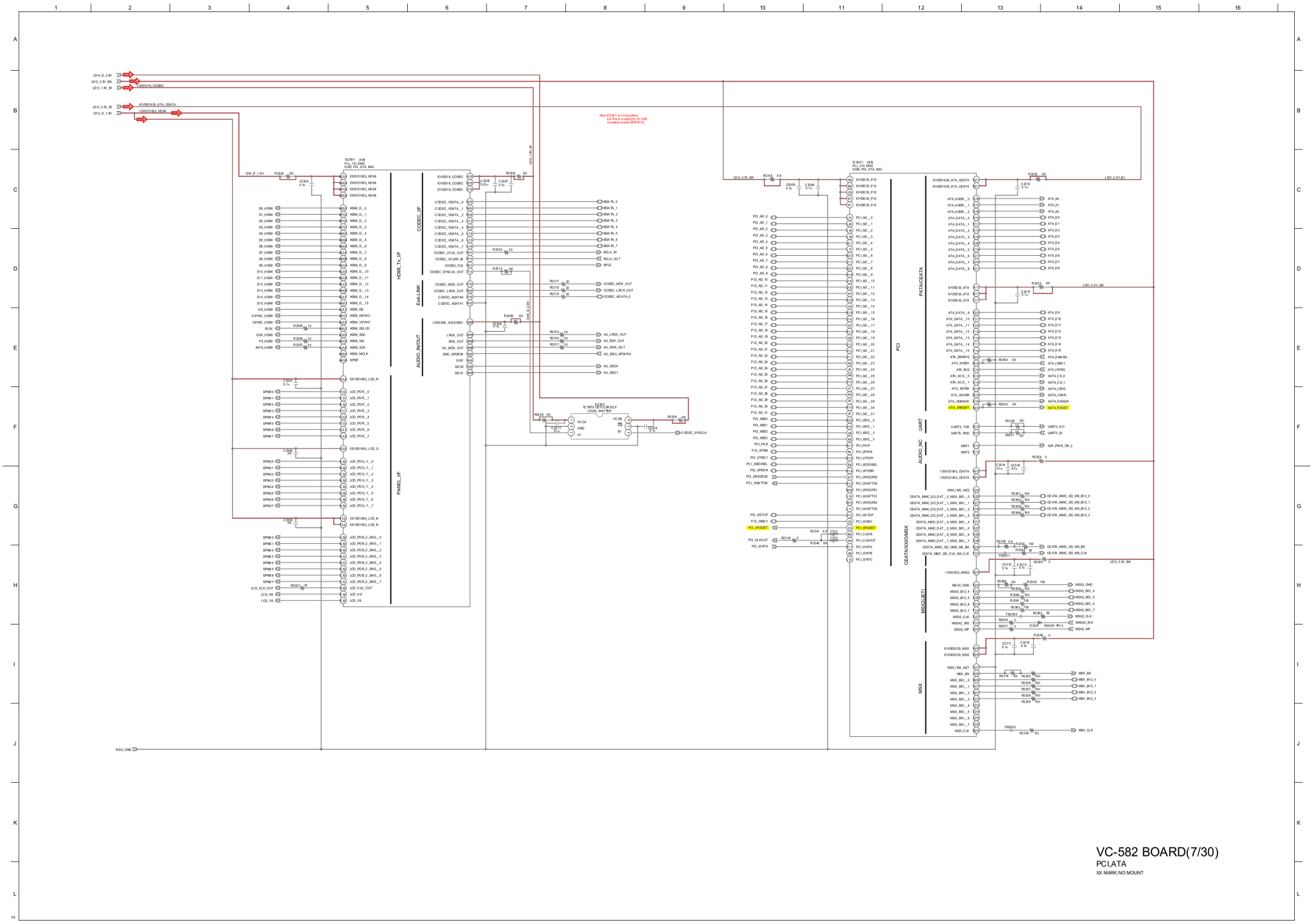
VC-582 BOARD(7/30)
PCI,ATA
XX MARK:NO MOUNT

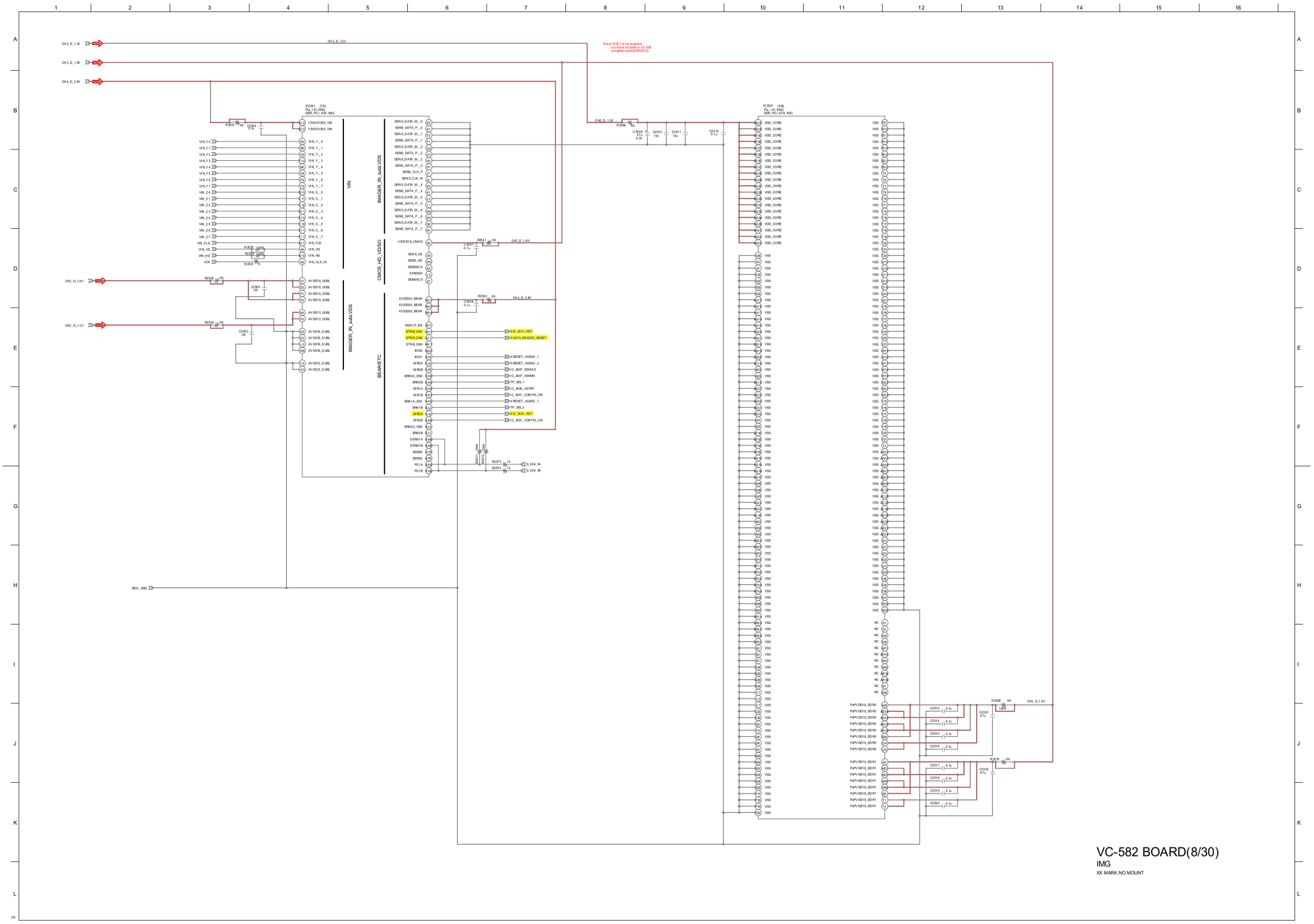
VC-582 BOARD(8/30)
IMG
XX MARK:NO MOUNT

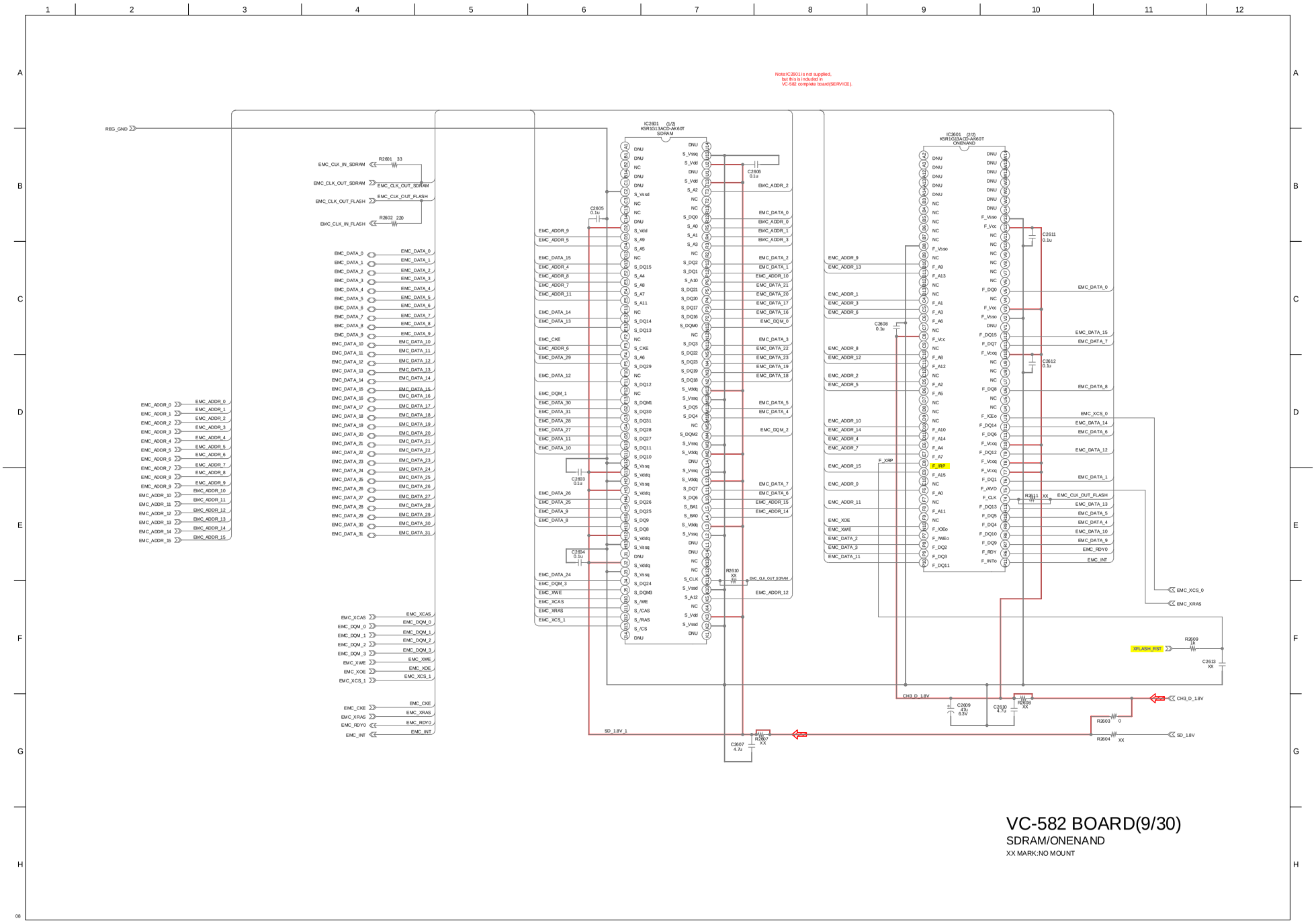
Note:IC2601 is not supplied.
but this is included in
VC-582 complete board(SERVICE).
IC2601 (1/2)
KSR1G13ACD-AK60T
SDRAM
IC2601 (2/2)
KSR1G13ACD-AK60T
ONENAND
REG_GND
EMC_CLK_IN_SDRAM
R2601 33
EMC_CLK_OUT_SDRAM
EMC_CLK_OUT_FLASH
R2602 220
EMC_CLK_IN_FLASH
C2605 0.1u
C2606 0.1u
C2603 0.1u
C2604 0.1u
R2610 XX
C2608 0.3u
C2611 0.1u
C2612 0.3u
R2611 XX
XFLASH_RST
R2609 1k
C2613 XX
CH3_D_18V
C2609 4.7u 6.3V
C2610 4.7u
R2608 XX
R2603 0
R2604 XX
SD_18V
SD_18V_1
C2607 4.7u
R2607 XX
F_XRP
VC-582 BOARD(9/30)
SDRAM/ONENAND
XX MARK:NO MOUNT

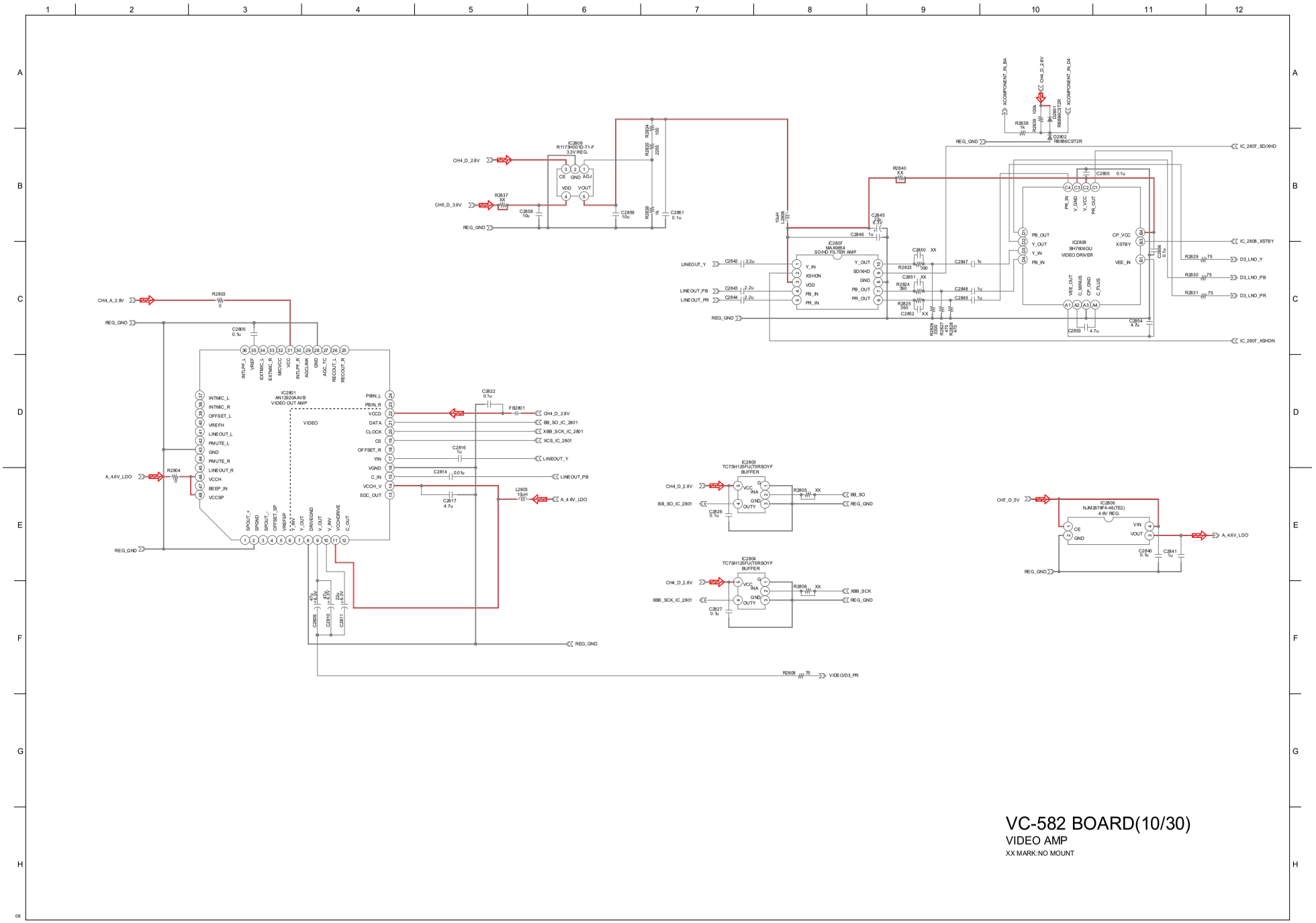
VC-582 BOARD(10/30)
VIDEO AMP
XX MARK:NO MOUNT
IC2809
R1173H001D-T1-F
3.3V REG.
IC2807
MAX9164
SD/HD FILTER AMP
IC2808
BH7606GU
VIDEO DRIVER
IC2801
AN12920AVB
VIDEO OUT AMP
IC2803
TC7SH125FU(T5RSOYF
BUFFER
IC2804
TC7SH125FU(T5RSOYF
BUFFER
IC2806
NJM2878F4-46(TE2)
4.6V REG.
CH4_D_2.8V
CH5_D_3.9V
REG_GND
CH4_A_2.8V
A_4.6V_LDO
CH7_D_5V
IC_2807_SD/XHD
IC_2808_XSTBY
D3_LNO_Y
D3_LNO_PB
D3_LNO_PR
IC_2807_XSHDN
LINEOUT_Y
LINEOUT_PB
LINEOUT_PR
BB_SO_IC_2801
XBB_SCK_IC_2801
XCS_IC_2801
VIDEO/D3_PR
BB_SO
XBB_SCK

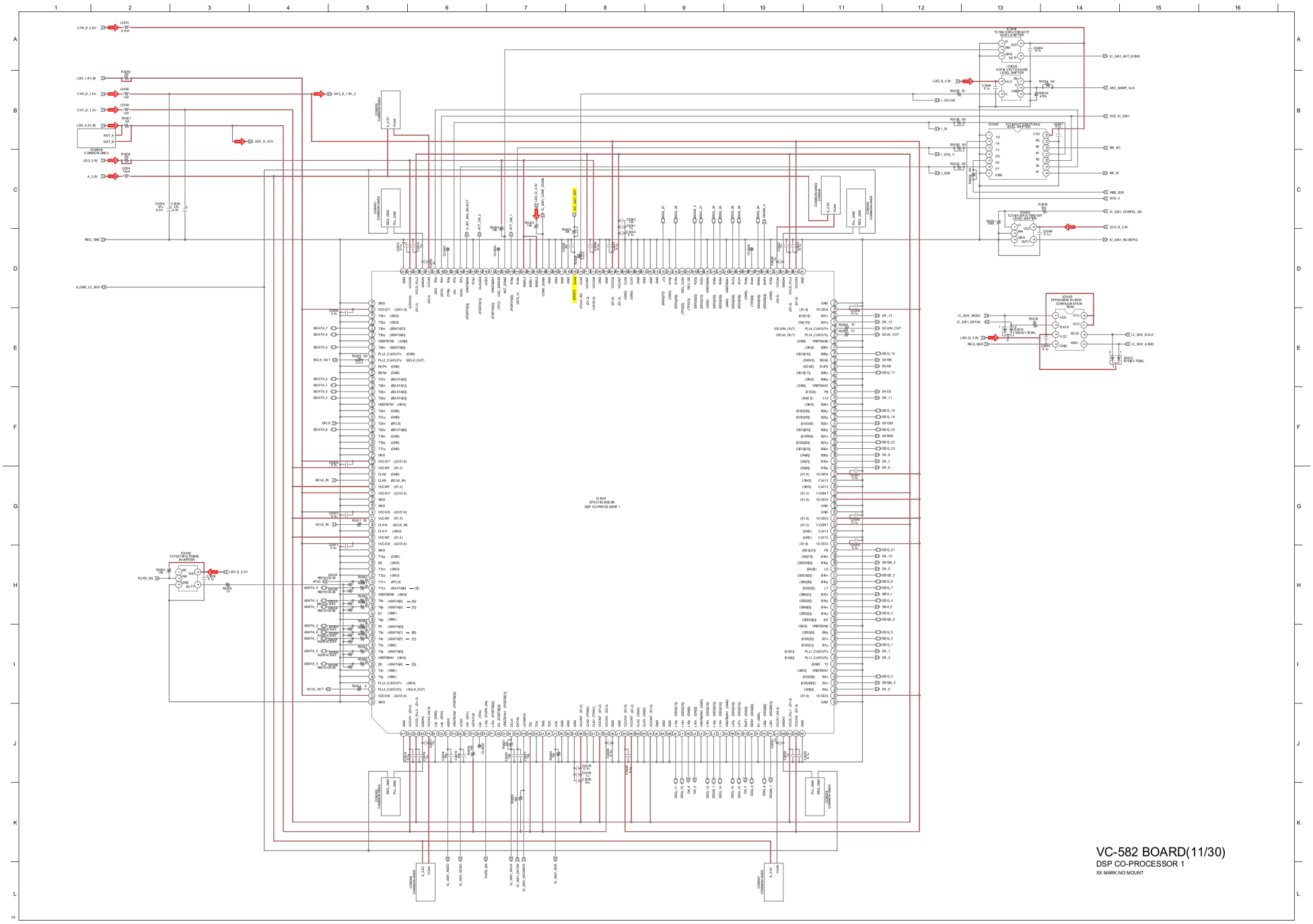
VC-582 BOARD(11/30)
DSP CO-PROCESSOR 1
XX MARK:NO MOUNT

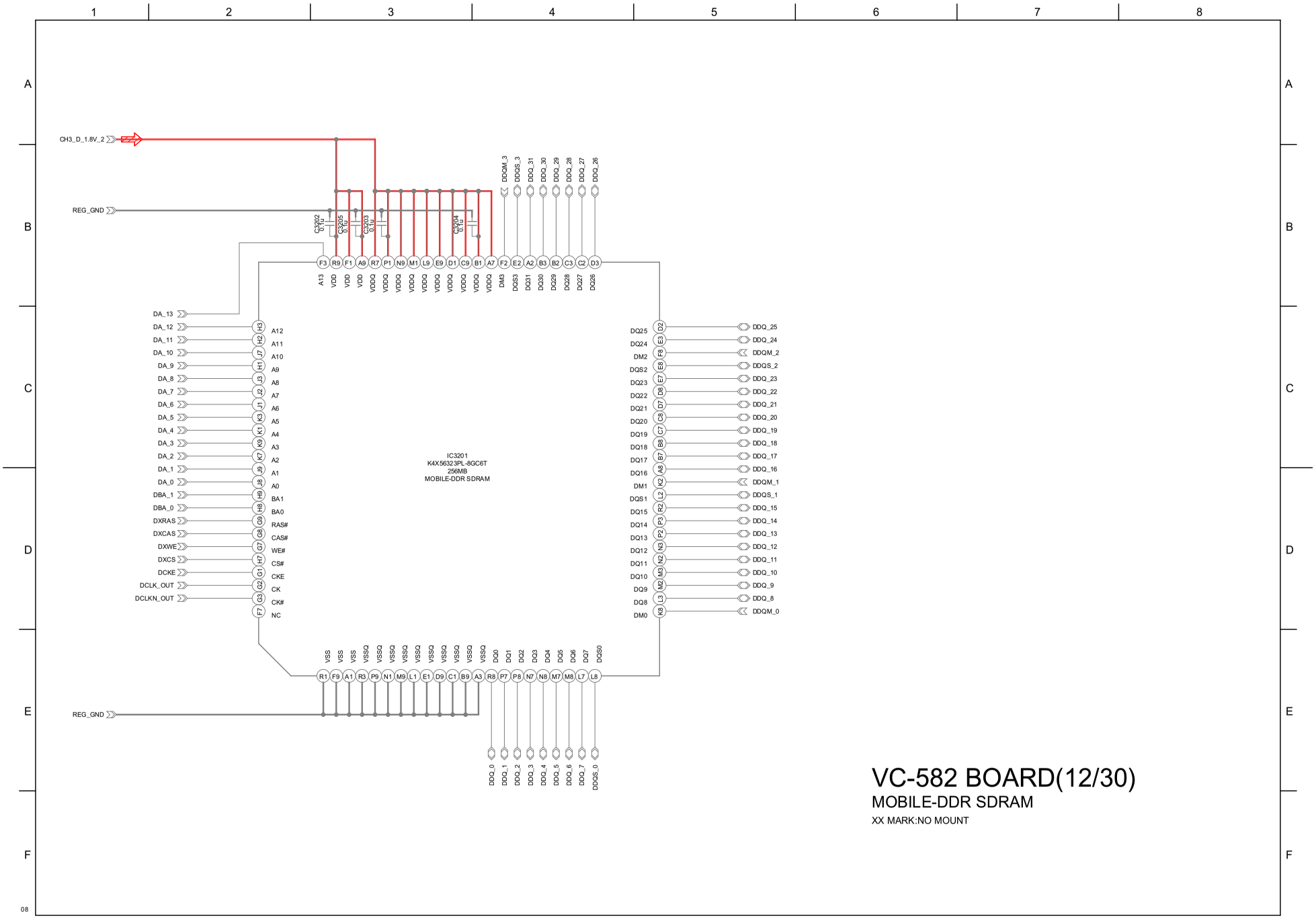
CH3_D_1.8V_2
REG_GND
C3202 0.1u
C3205 0.1u
C3203 0.1u
C3204 0.1u
DDQM_3
DDQS_3
DDQ_31
DDQ_30
DDQ_29
DDQ_28
DDQ_27
DDQ_26
F3 R9 F1 A9 R7 P1 N9 M1 L9 E9 D1 C9 B1 A7 F2 E2 A2 B3 B2 C3 C2 D3
A13 VDD VDD VDD VDDQ VDDQ VDDQ VDDQ VDDQ VDDQ VDDQ VDDQ VDDQ VDDQ VDDQ DM3 DQS3 DQ31 DQ30 DQ29 DQ28 DQ27 DQ26
DA_13
DA_12
DA_11
DA_10
DA_9
DA_8
DA_7
DA_6
DA_5
DA_4
DA_3
DA_2
DA_1
DA_0
DBA_1
DBA_0
DXRAS
DXCAS
DXWE
DXCS
DCKE
DCLK_OUT
DCLKN_OUT
H3 A12
H2 A11
J7 A10
H1 A9
L3 A8
N2 A7
J1 A6
K3 A5
K1 A4
K9 A3
K7 A2
K8 A1
L9 A0
M9 BA1
H8 BA0
G9 RAS#
G8 CAS#
G7 WE#
H7 CS#
G1 CKE
G2 CK
G3 CK#
F7 NC
IC3201
K4X56323PL-8GC6T
256MB
MOBILE-DDR SDRAM
DQ25 D2
DQ24 E3
DM2 F8
DQS2 E8
DQ23 E7
DQ22 D8
DQ21 D7
DQ20 C8
DQ19 C7
DQ18 B8
DQ17 B7
DQ16 A8
DM1 K2
DQS1 L2
DQ15 R2
DQ14 P3
DQ13 P2
DQ12 N3
DQ11 N2
DQ10 M3
DQ9 M2
DQ8 L3
DM0 K8
DDQ_25
DDQ_24
DDQM_2
DDQS_2
DDQ_23
DDQ_22
DDQ_21
DDQ_20
DDQ_19
DDQ_18
DDQ_17
DDQ_16
DDQM_1
DDQS_1
DDQ_15
DDQ_14
DDQ_13
DDQ_12
DDQ_11
DDQ_10
DDQ_9
DDQ_8
DDQM_0
VSS VSS VSS VSSQ VSSQ VSSQ VSSQ VSSQ VSSQ VSSQ VSSQ VSSQ VSSQ VSSQ VSSQ DQ0 DQ1 DQ2 DQ3 DQ4 DQ5 DQ6 DQ7 DQS0
R1 F9 A1 R3 P9 N1 M9 L1 E1 D9 C1 B9 A3 R8 P7 P8 N7 N8 M7 M8 L7 L8
REG_GND
DDQ_0
DDQ_1
DDQ_2
DDQ_3
DDQ_4
DDQ_5
DDQ_6
DDQ_7
DDQS_0
VC-582 BOARD(12/30)
MOBILE-DDR SDRAM
XX MARK:NO MOUNT
08

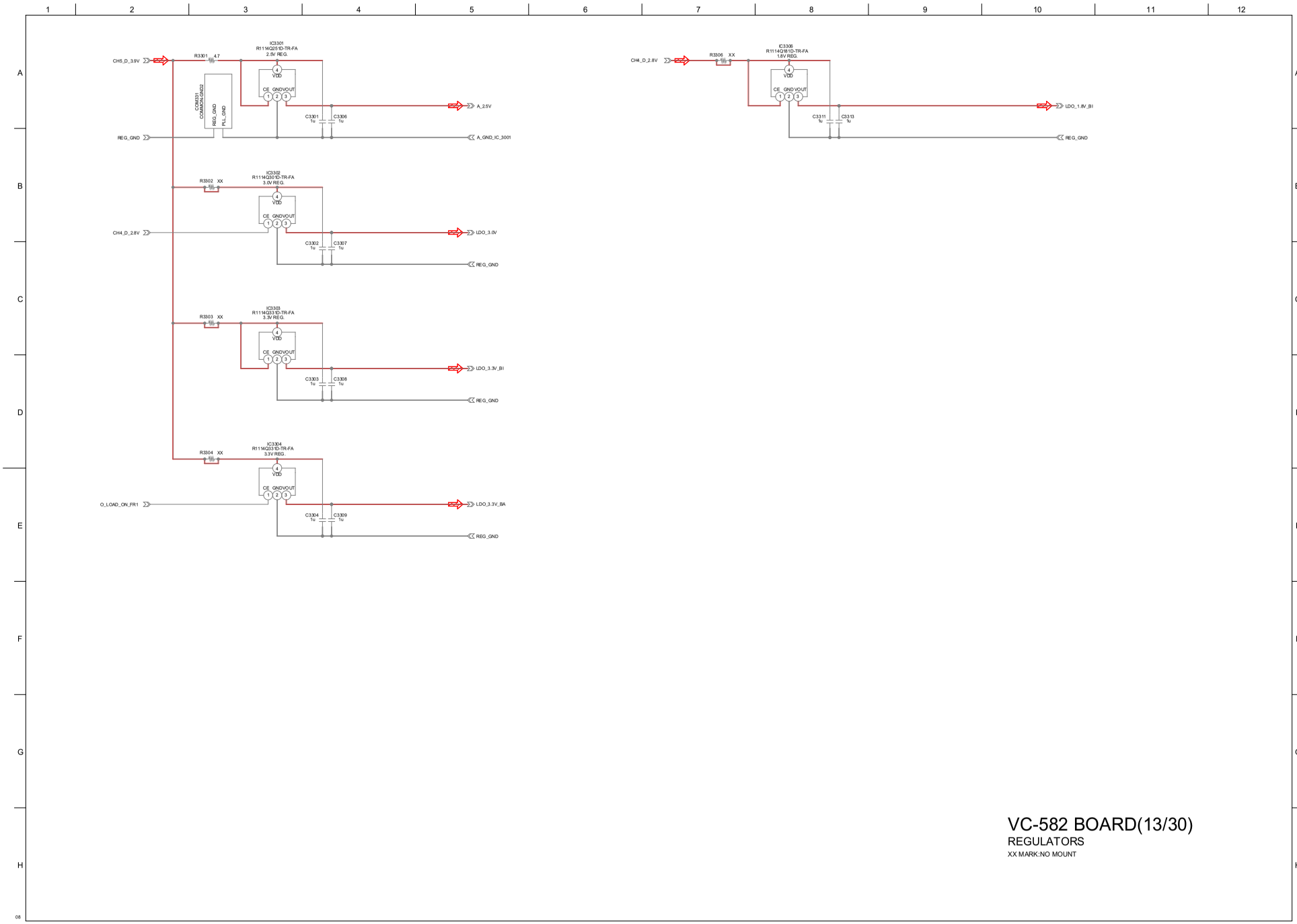
CH5_D_3.9V
R3301 4.7
IC3301
R1114Q251D-TR-FA
2.5V REG.
VDD
CE GNDVOUT
C3301 1u
C3306 1u
A_2.5V
REG_GND
A_GND_IC_3001
R3302 XX
IC3302
R1114Q301D-TR-FA
3.0V REG.
CH4_D_2.8V
LDO_3.0V
C3302 1u
C3307 1u
R3303 XX
IC3303
R1114Q331D-TR-FA
3.3V REG.
LDO_3.3V_BI
C3303 1u
C3308 1u
R3304 XX
IC3304
R1114Q331D-TR-FA
3.3V REG.
O_LOAD_ON_FR1
LDO_3.3V_BA
C3304 1u
C3309 1u
R3306 XX
IC3306
R1114Q181D-TR-FA
1.8V REG.
LDO_1.8V_BI
C3311 1u
C3313 1u
VC-582 BOARD(13/30)
REGULATORS
XX MARK:NO MOUNT

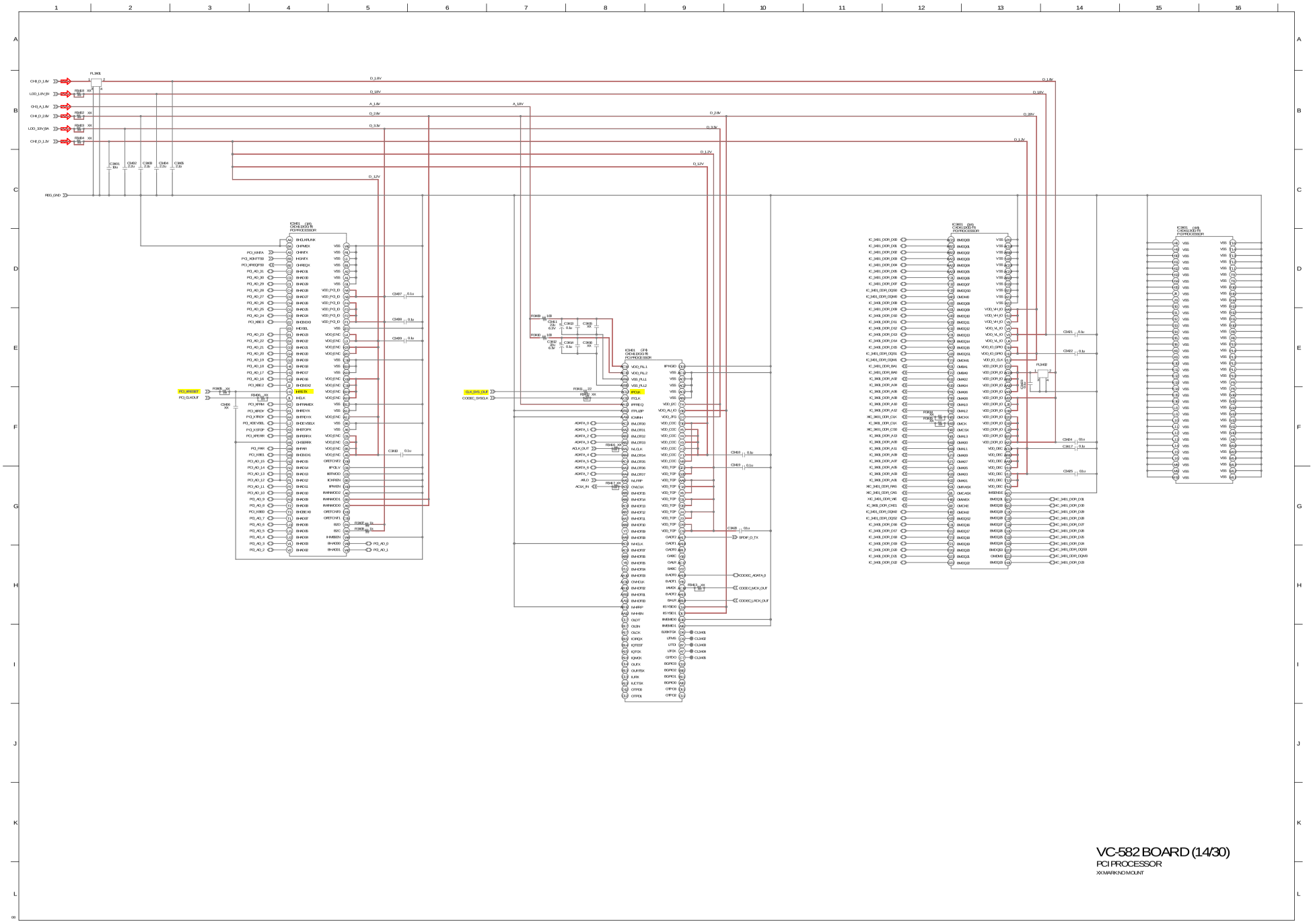
VC-582 BOARD (14/30)
PCI PROCESSOR
XX:MARK:NO MOUNT

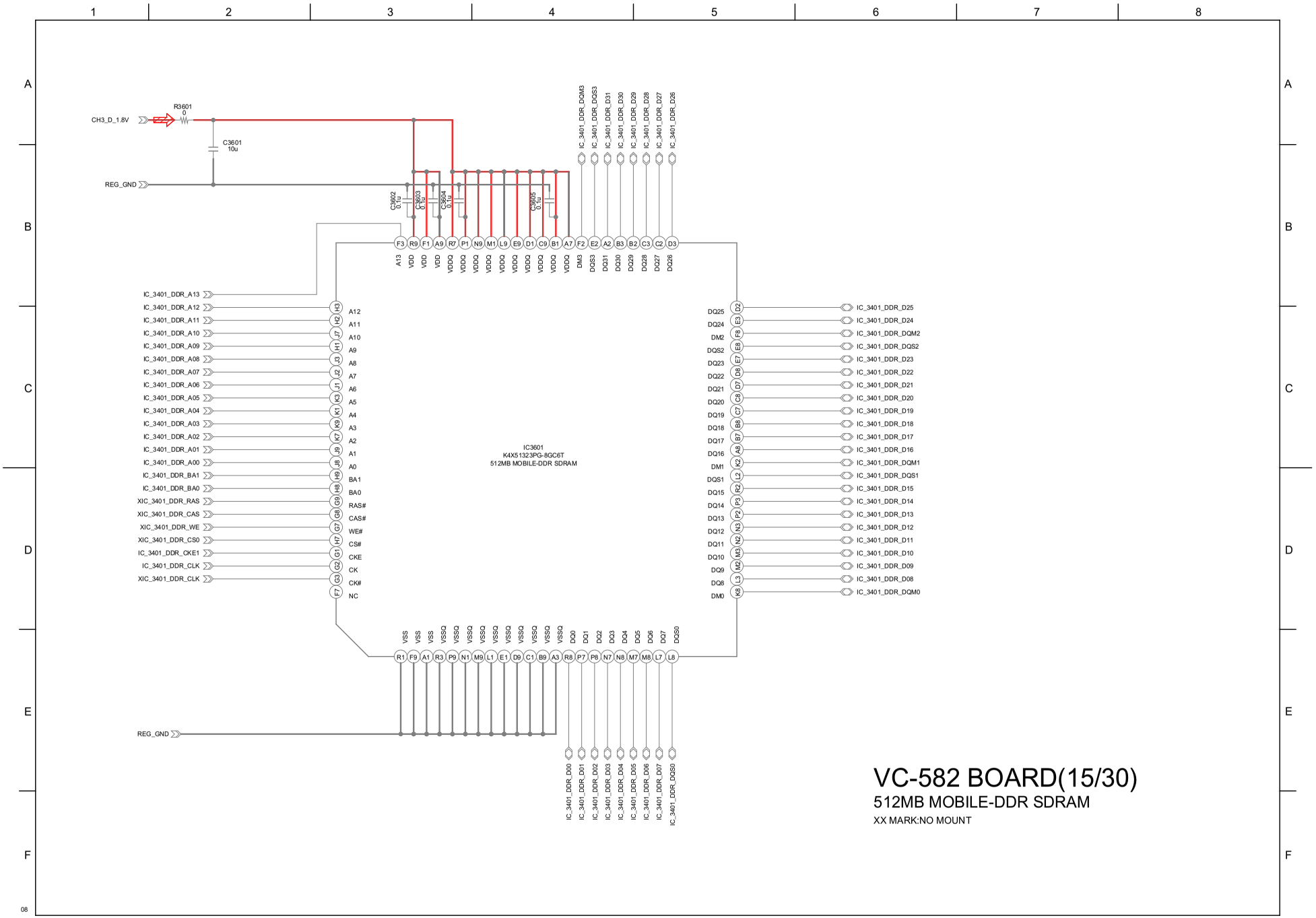
CH3_D_1.8V
R3601
0
C3601
10u
REG_GND
C3602
0.1u
C3603
0.1u
C3604
0.1u
C3605
0.1u
IC3601
K4X51323PG-8GC6T
512MB MOBILE-DDR SDRAM
IC_3401_DDR_A13
IC_3401_DDR_A12
IC_3401_DDR_A11
IC_3401_DDR_A10
IC_3401_DDR_A09
IC_3401_DDR_A08
IC_3401_DDR_A07
IC_3401_DDR_A06
IC_3401_DDR_A05
IC_3401_DDR_A04
IC_3401_DDR_A03
IC_3401_DDR_A02
IC_3401_DDR_A01
IC_3401_DDR_A00
IC_3401_DDR_BA1
IC_3401_DDR_BA0
XIC_3401_DDR_RAS
XIC_3401_DDR_CAS
XIC_3401_DDR_WE
XIC_3401_DDR_CS0
IC_3401_DDR_CKE1
IC_3401_DDR_CLK
XIC_3401_DDR_CLK
IC_3401_DDR_D25
IC_3401_DDR_D24
IC_3401_DDR_DQM2
IC_3401_DDR_DQS2
IC_3401_DDR_D23
IC_3401_DDR_D22
IC_3401_DDR_D21
IC_3401_DDR_D20
IC_3401_DDR_D19
IC_3401_DDR_D18
IC_3401_DDR_D17
IC_3401_DDR_D16
IC_3401_DDR_DQM1
IC_3401_DDR_DQS1
IC_3401_DDR_D15
IC_3401_DDR_D14
IC_3401_DDR_D13
IC_3401_DDR_D12
IC_3401_DDR_D11
IC_3401_DDR_D10
IC_3401_DDR_D09
IC_3401_DDR_D08
IC_3401_DDR_DQM0
IC_3401_DDR_DQM3
IC_3401_DDR_DQS3
IC_3401_DDR_D31
IC_3401_DDR_D30
IC_3401_DDR_D29
IC_3401_DDR_D28
IC_3401_DDR_D27
IC_3401_DDR_D26
IC_3401_DDR_D00
IC_3401_DDR_D01
IC_3401_DDR_D02
IC_3401_DDR_D03
IC_3401_DDR_D04
IC_3401_DDR_D05
IC_3401_DDR_D06
IC_3401_DDR_D07
IC_3401_DDR_DQS0
VC-582 BOARD(15/30)
512MB MOBILE-DDR SDRAM
XX MARK:NO MOUNT

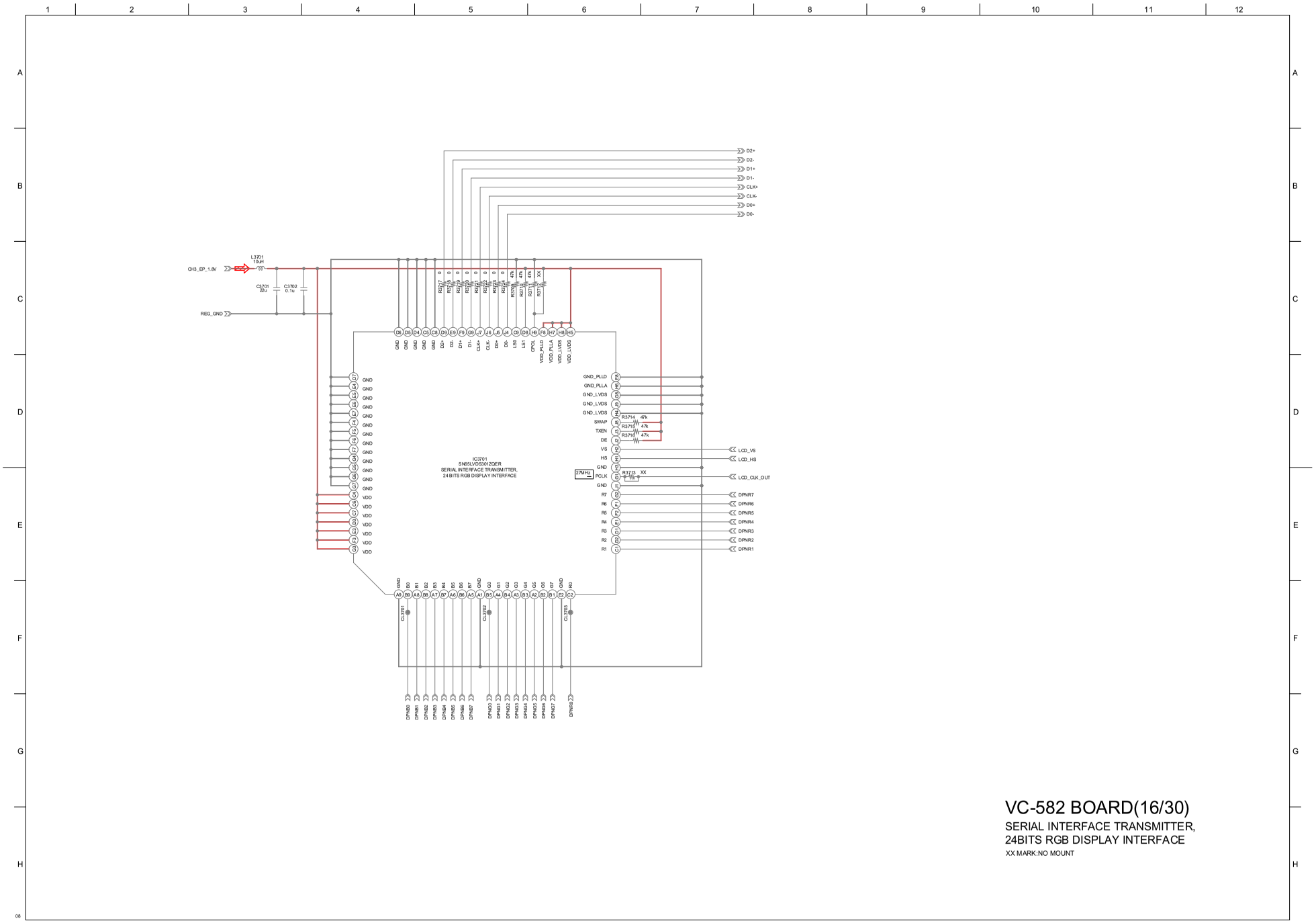

VC-582 BOARD(16/30)

SERIAL INTERFACE TRANSMITTER,
24BITS RGB DISPLAY INTERFACE

XX MARK:NO MOUNT

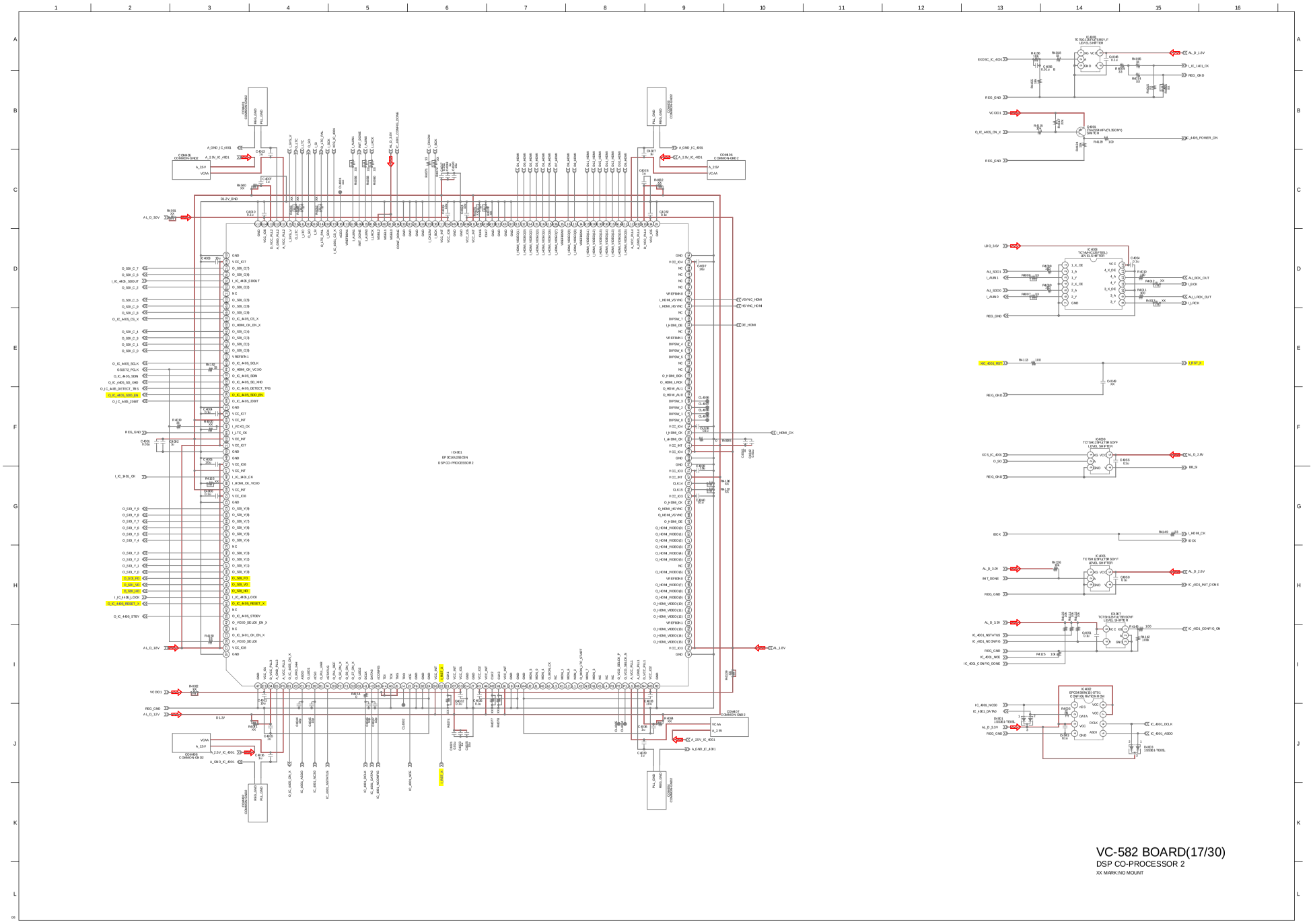
VC-582 BOARD(17/30)
DSP CO-PROCESSOR 2
XX MARK:NO MOUNT

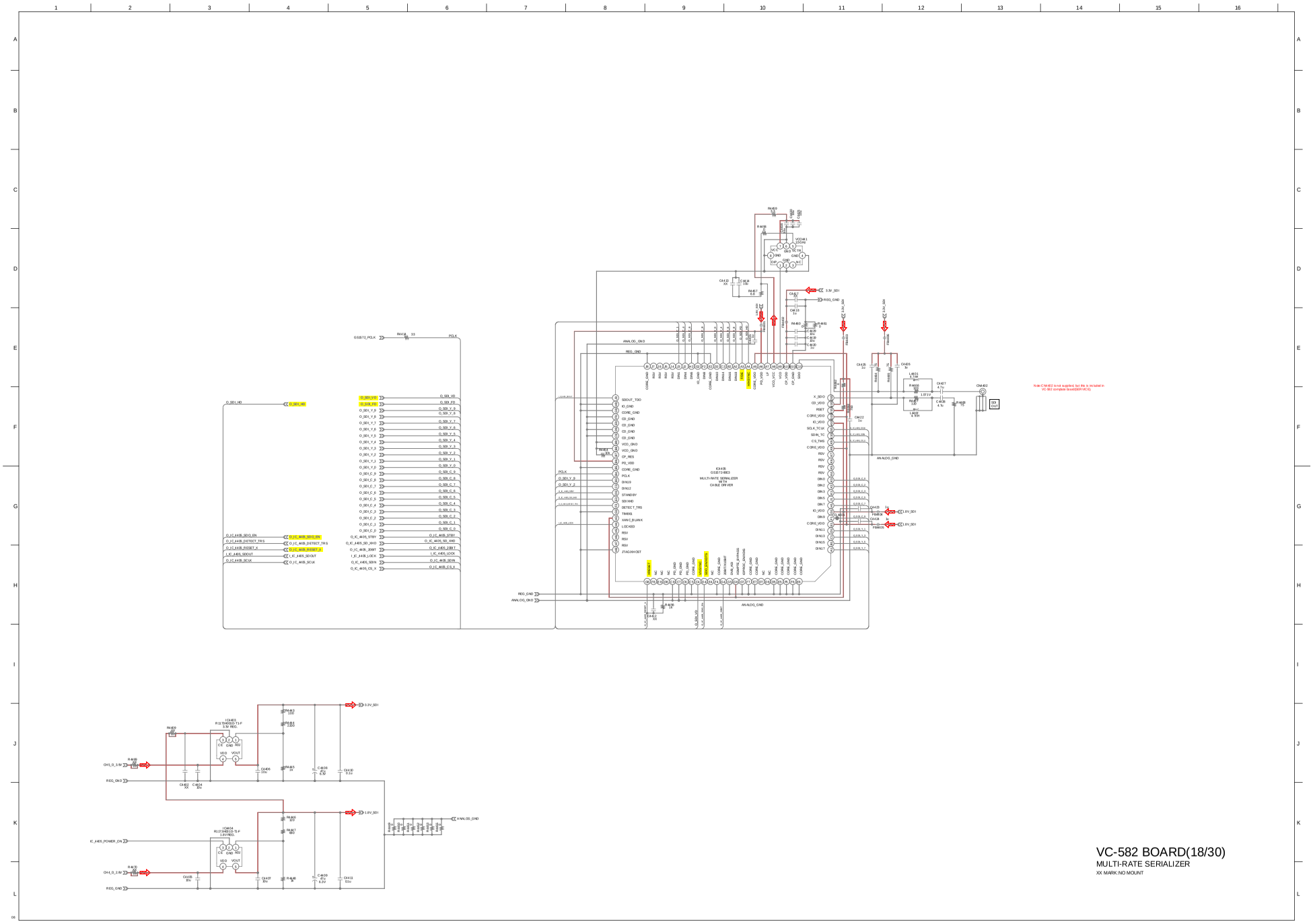
VC-582 BOARD(18/30)
MULTI-RATE SERIALIZER
XX MARK:NO MOUNT

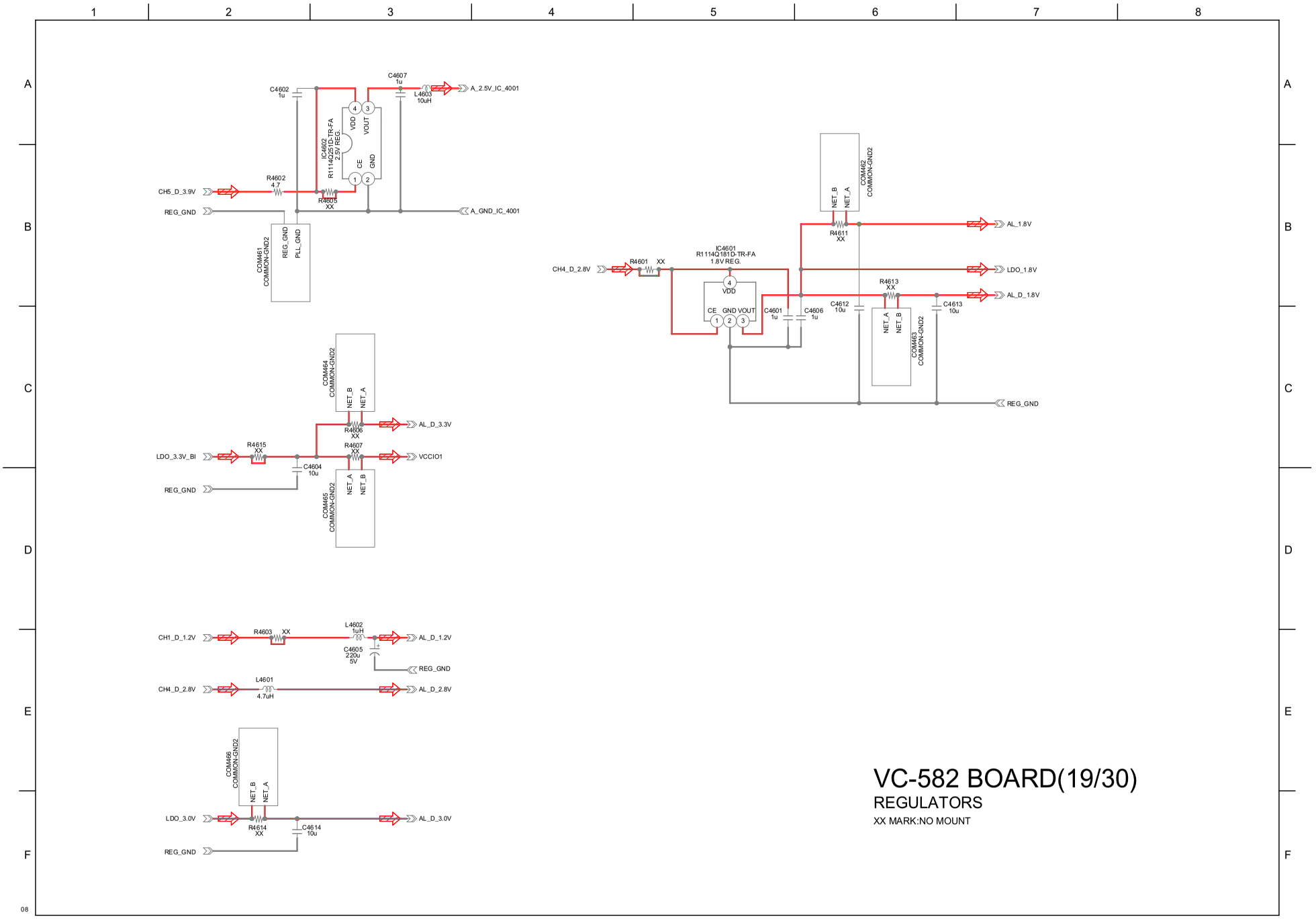
C4602
1u
C4607
1u
L4603
10uH
A_2.5V_IC_4001
IC4602
R1114Q251D-TR-FA
2.5V REG.
VDD
VOUT
CE
GND
R4602
4.7
CH5_D_3.9V
R4605
XX
REG_GND
A_GND_IC_4001
COM461
COMMON-GND2
REG_GND
PLL_GND
COM462
COMMON-GND2
NET_B
NET_A
R4611
XX
AL_1.8V
IC4601
R1114Q181D-TR-FA
1.8V REG.
R4601
XX
CH4_D_2.8V
LDO_1.8V
R4613
XX
AL_D_1.8V
C4601
1u
C4606
1u
C4612
10u
C4613
10u
COM463
COMMON-GND2
REG_GND
COM464
COMMON-GND2
R4606
XX
AL_D_3.3V
R4615
XX
LDO_3.3V_BI
R4607
XX
VCCIO1
C4604
10u
COM465
COMMON-GND2
R4603
XX
CH1_D_1.2V
L4602
1uH
AL_D_1.2V
C4605
220u
5V
L4601
4.7uH
CH4_D_2.8V
AL_D_2.8V
COM466
COMMON-GND2
LDO_3.0V
R4614
XX
C4614
10u
AL_D_3.0V
VC-582 BOARD(19/30)
REGULATORS
XX MARK:NO MOUNT
08

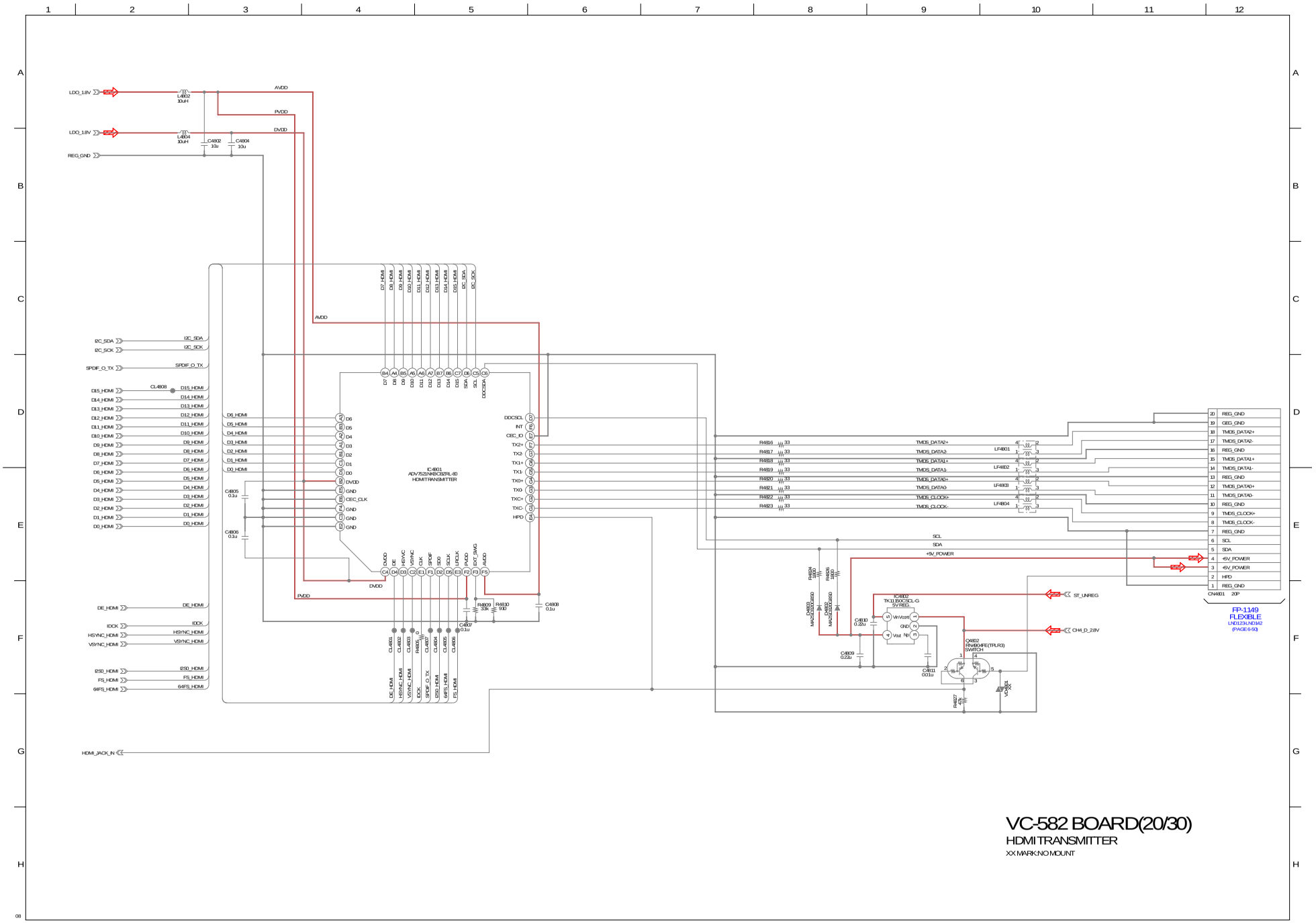
LDO_1.8V
L4802 10uH
L4804 10uH
C4802 10u
C4804 10u
REG_GND
AVDD
PVDD
DVDD
IC4801
ADV7522LNKBCBZRL-40
HDMI TRANSMITTER
I2C_SDA
I2C_SCK
SPDIF_O_TX
D15_HDMI
D14_HDMI
D13_HDMI
D12_HDMI
D11_HDMI
D10_HDMI
D9_HDMI
D8_HDMI
D7_HDMI
D6_HDMI
D5_HDMI
D4_HDMI
D3_HDMI
D2_HDMI
D1_HDMI
D0_HDMI
CL4808
C4805 0.1u
C4806 0.1u
CEC_CLK
DE_HDMI
IDCK
HSYNC_HDMI
VSYNC_HDMI
I2S0_HDMI
FS_HDMI
64FS_HDMI
HDMI_JACK_IN
DDCSCL
INT
CEC_IO
TX2+
TX2-
TX1+
TX1-
TX0+
TX0-
TXC+
TXC-
HPD
R4816 33
R4817 33
R4818 33
R4819 33
R4820 33
R4821 33
R4822 33
R4823 33
TMDS_DATA2+
TMDS_DATA2-
TMDS_DATA1+
TMDS_DATA1-
TMDS_DATA0+
TMDS_DATA0-
TMDS_CLOCK+
TMDS_CLOCK-
LF4801
LF4802
LF4803
LF4804
SCL
SDA
+5V_POWER
R4804 3k9
R4805 3k9
D4803 MDS0504USED
D4802 MDS0504USED
IC4802
TK11150CSCL-G
5V REG.
Vin
Vcont
GND
Vout
NC
C4810 0.22u
C4809 0.22u
C4811 0.01u
Q4802
RN4904FE(TPLR3)
SWITCH
R4807 47k
VC4801 5.6V
ST_UNREG
CH4_D_2.8V
R4809 3.3k
R4810 910
C4807 0.1u
C4808 0.1u
CN4801 20P
FP-1149
FLEXIBLE
LND123LND142
(PAGE 6-5)
VC-582 BOARD(20/30)
HDMI TRANSMITTER
XX MARK:NO MOUNT

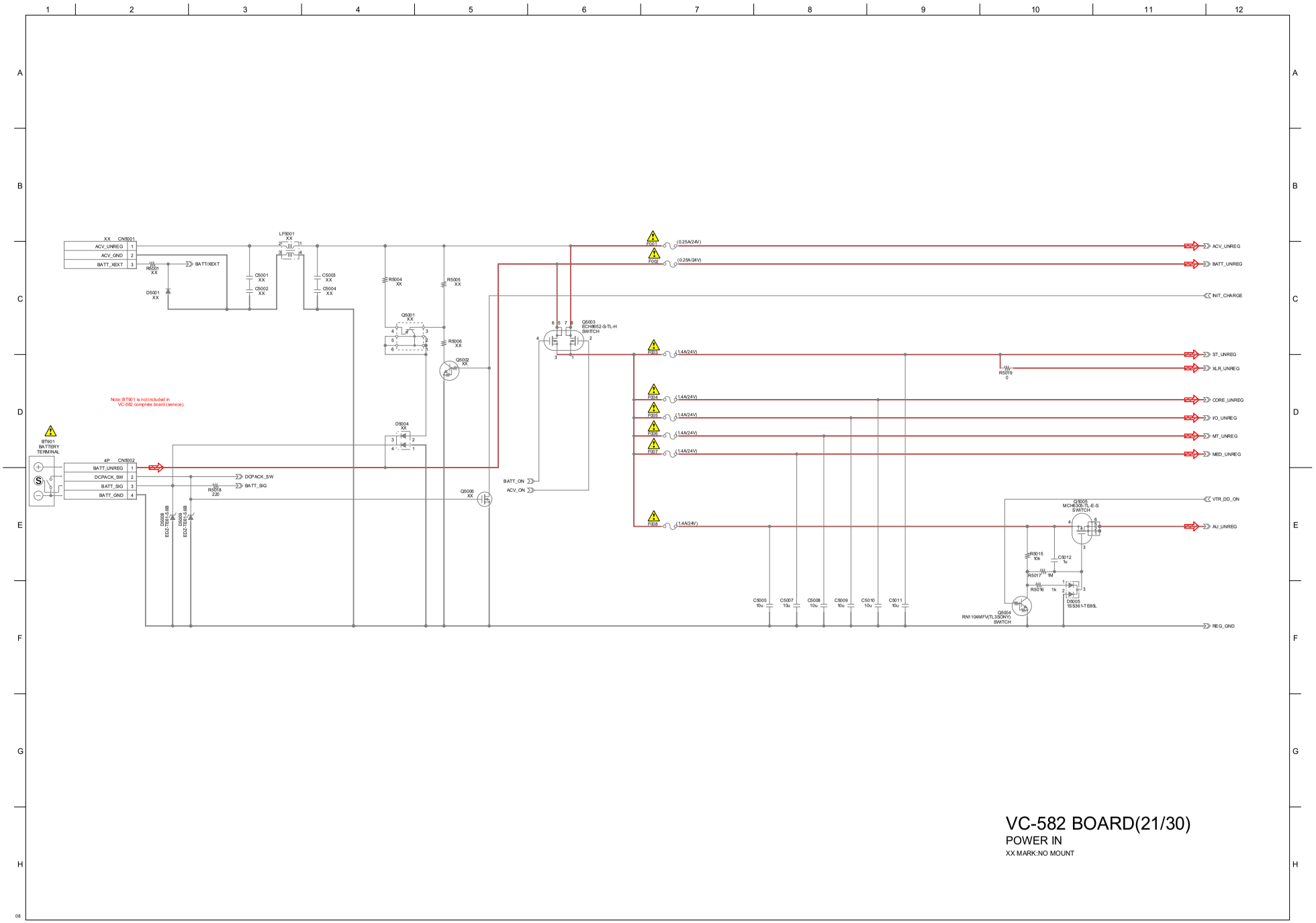

VC-582 BOARD(21/30)

POWER IN

XX MARK:NO MOUNT

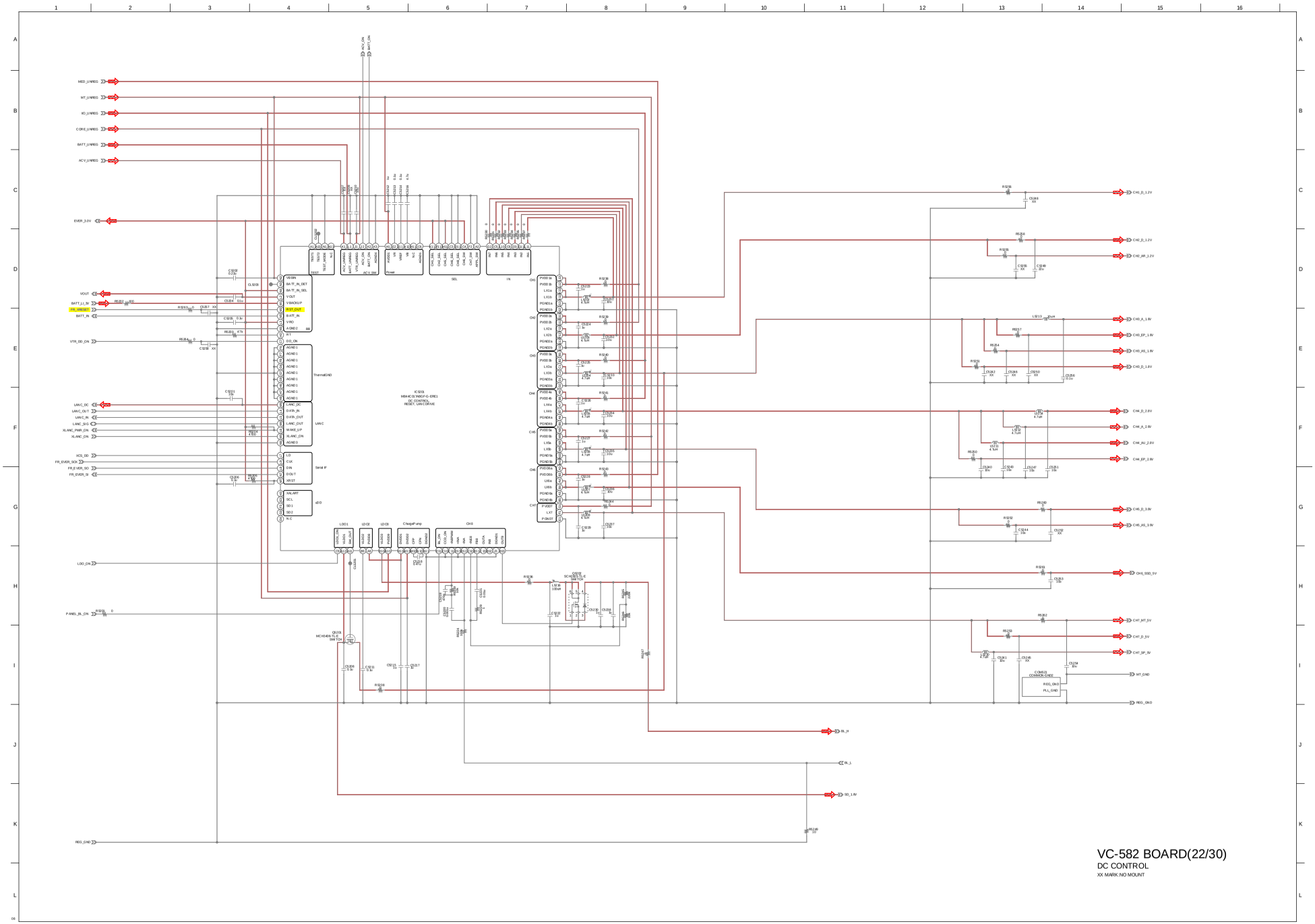
VC-582 BOARD(22/30)
DC CONTROL
XX MARK:NO MOUNT

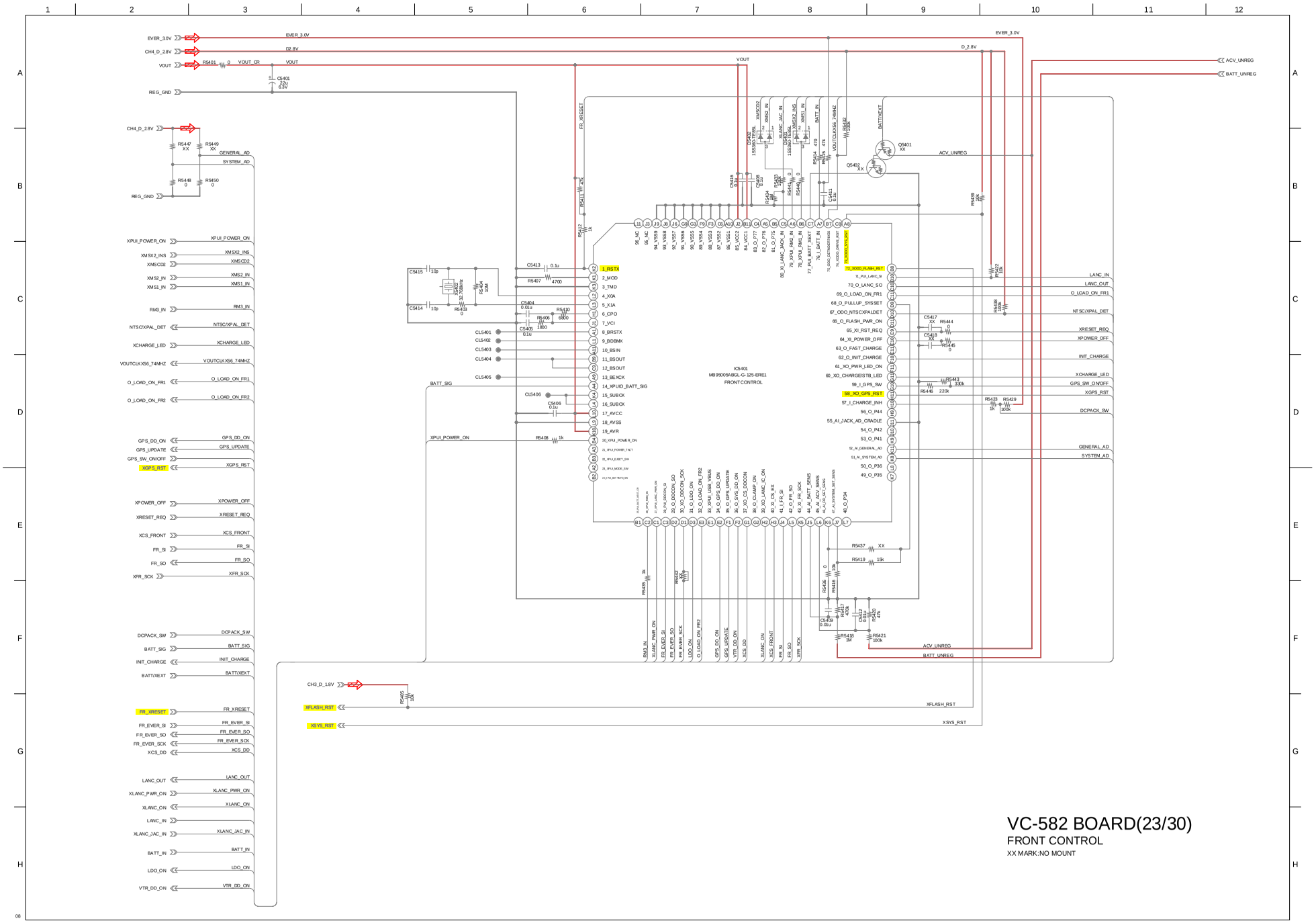
VC-582 BOARD(23/30)
FRONT CONTROL
XX MARK:NO MOUNT
IC5401
MB99005A0GL-G-125-ERE1
FRONT CONTROL

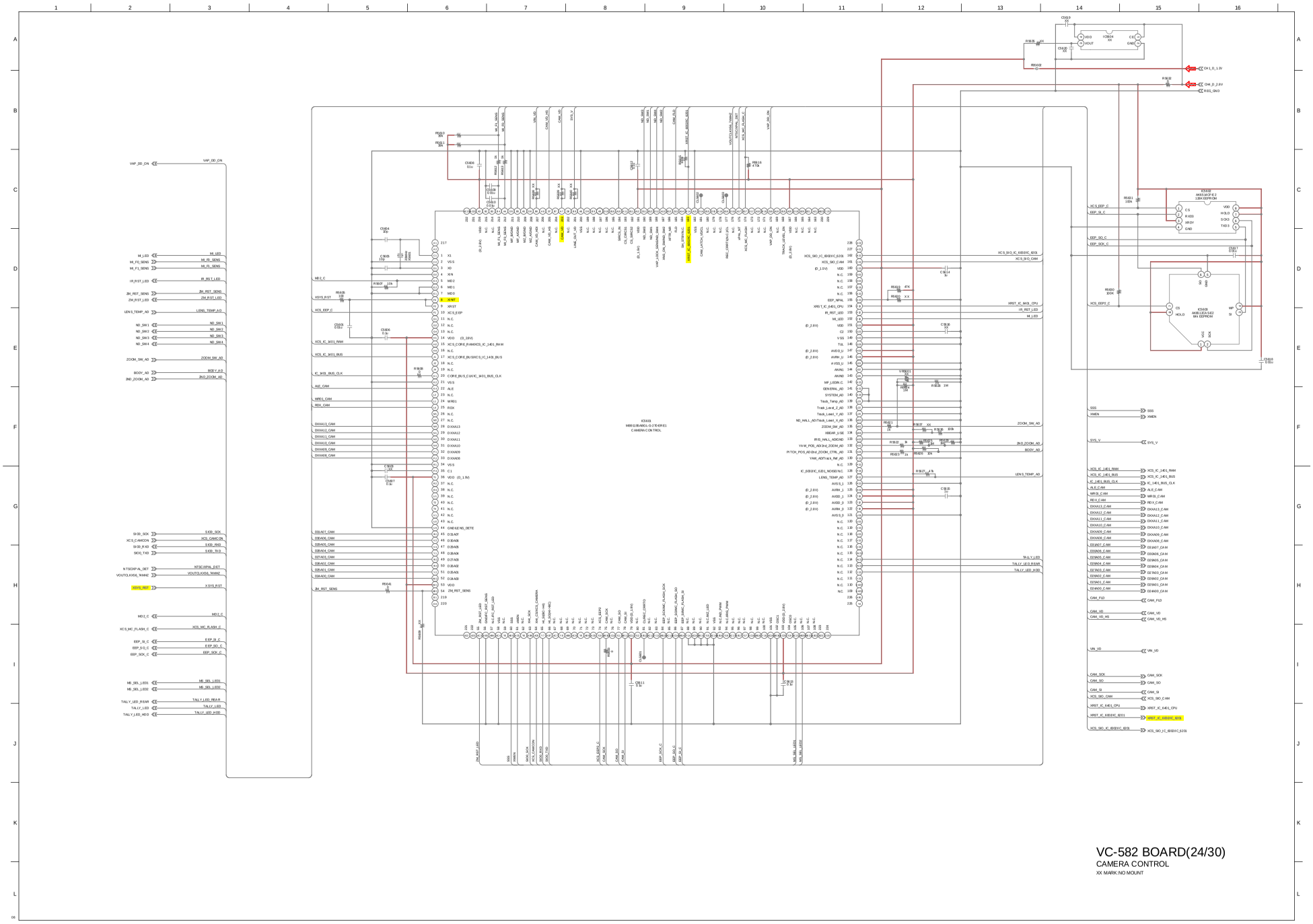
VC-582 BOARD(24/30)
CAMERA CONTROL
XX MARK:NO MOUNT

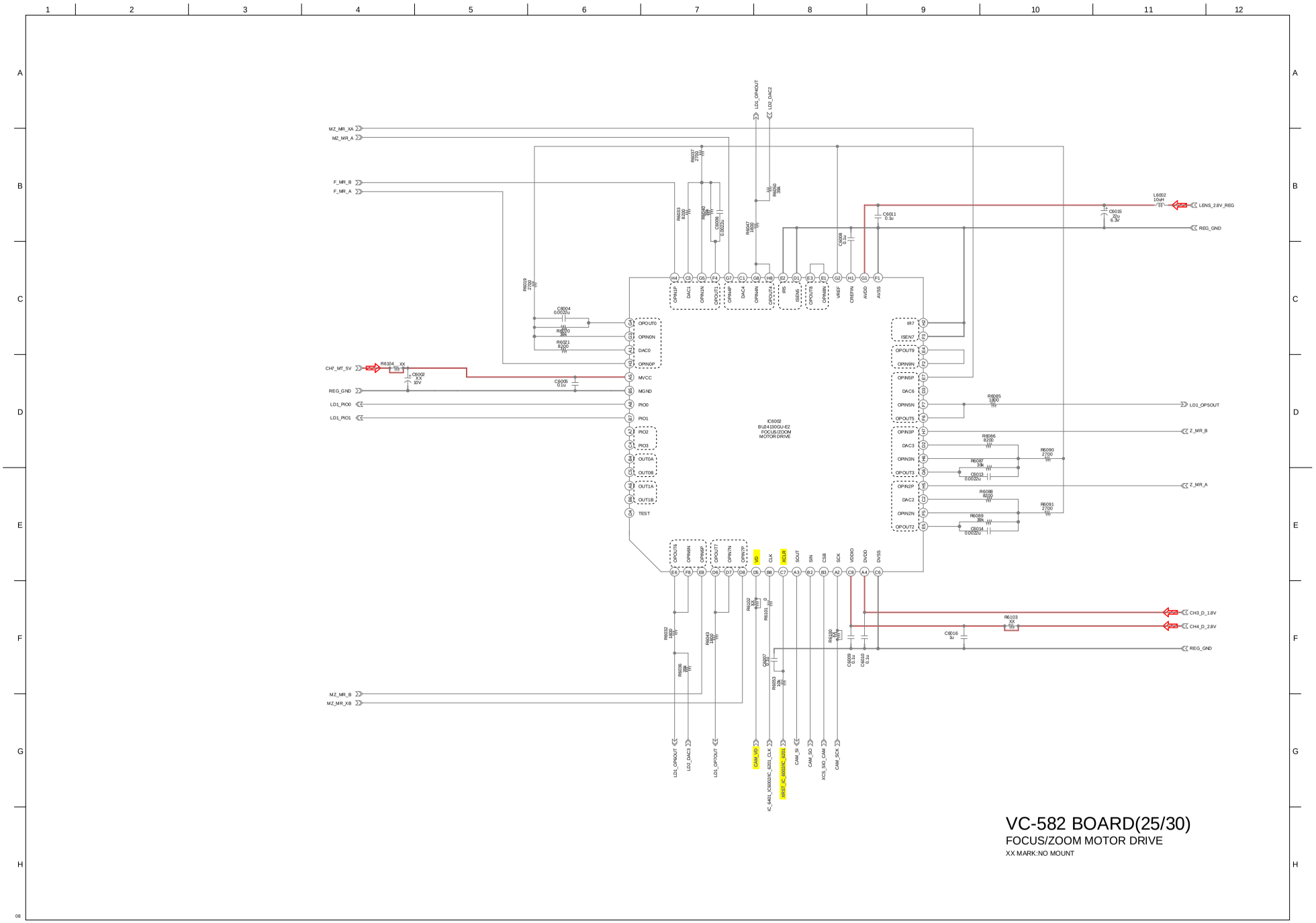

VC-582 BOARD(25/30)

FOCUS/ZOOM MOTOR DRIVE

XX MARK:NO MOUNT

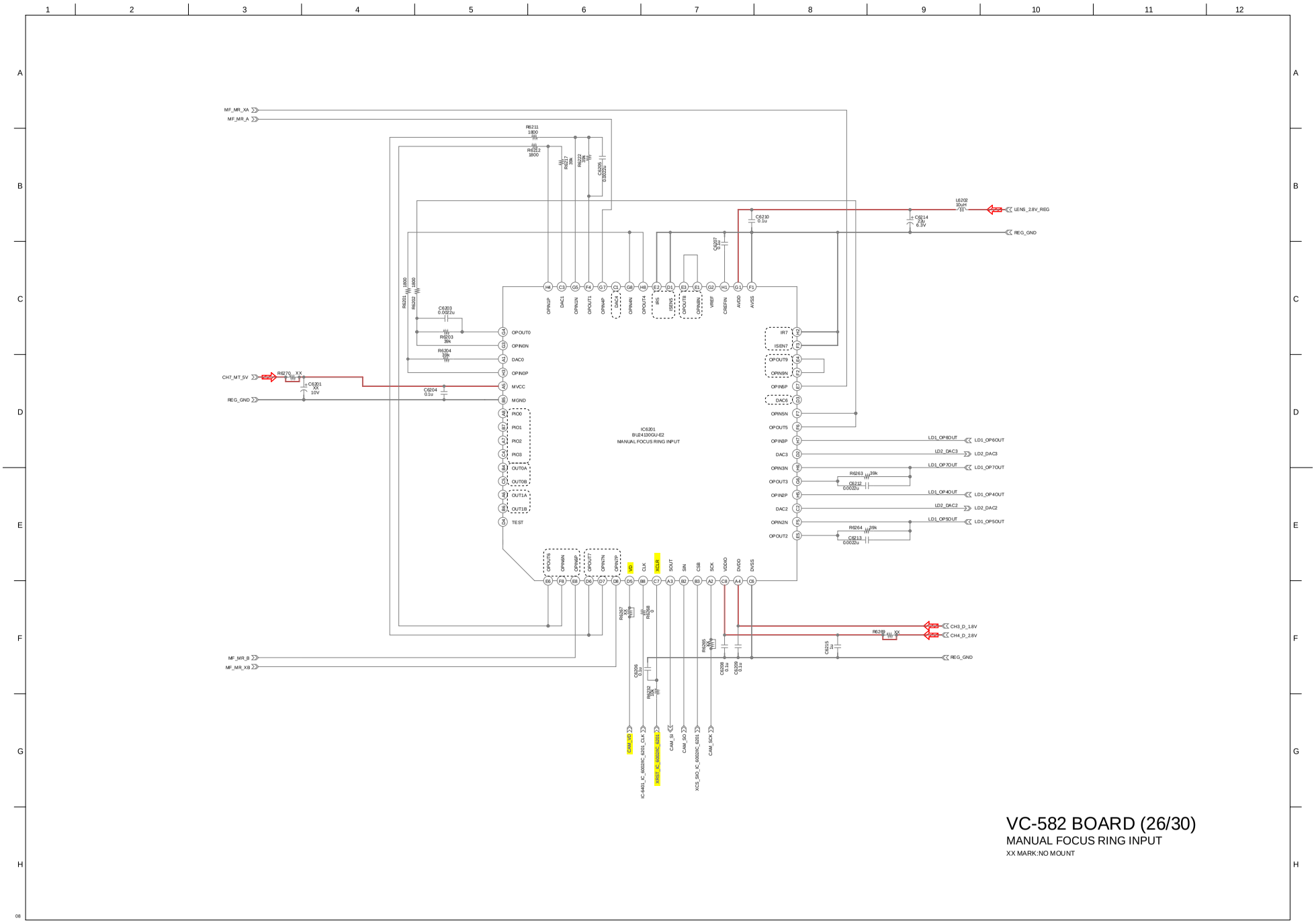

VC-582 BOARD (26/30)

MANUAL FOCUS RING INPUT

XX MARK:NO MOUNT

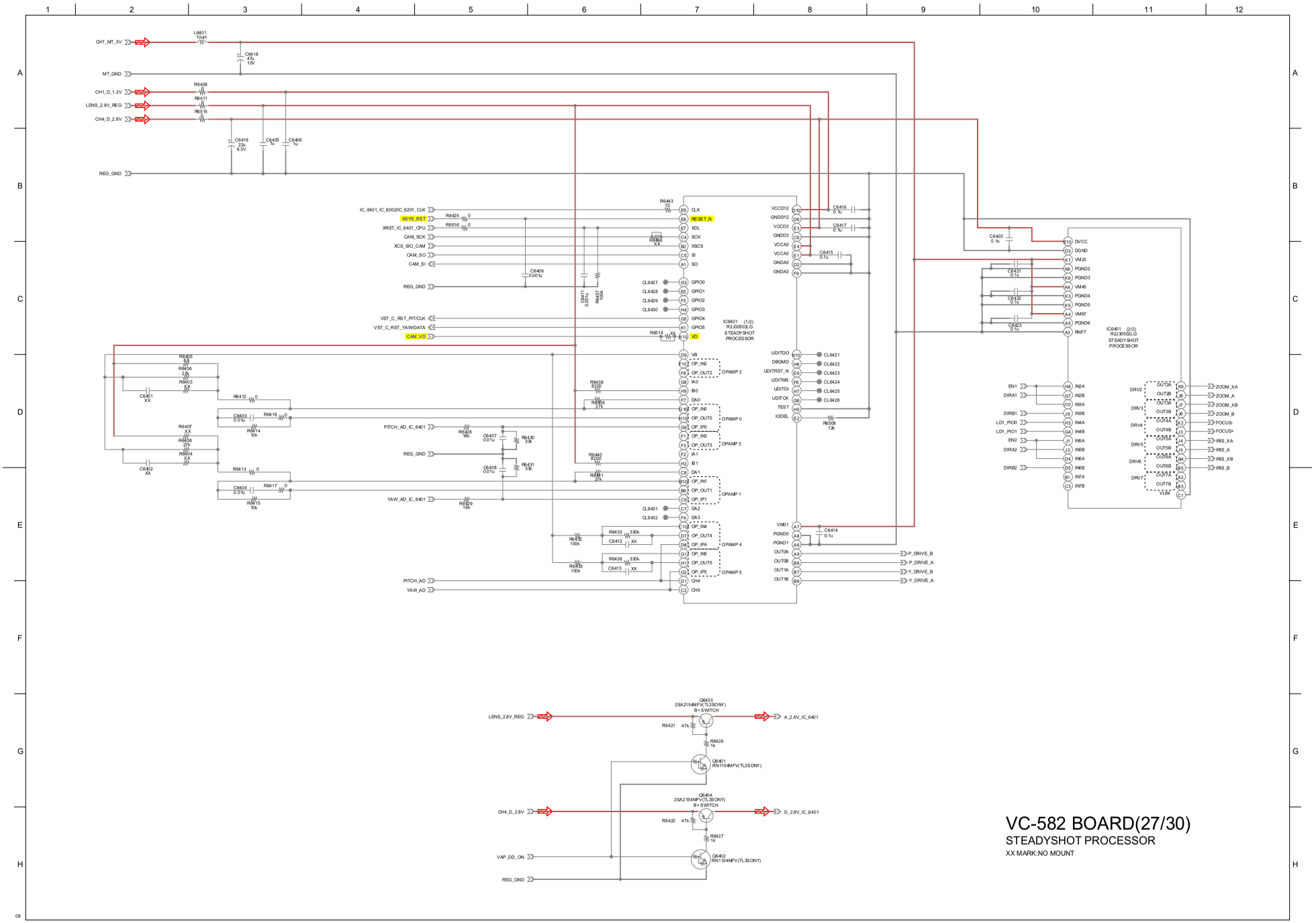
VC-582 BOARD(27/30)
STEADYSHOT PROCESSOR
XX MARK:NO MOUNT
IC6401 (1/2)
R2JU0502LG
STEADYSHOT
PROCESSOR
IC6401 (2/2)
R2JU0502LG
STEADYSHOT
PROCESSOR
CH7_MT_5V
MT_GND
CH1_D_1.2V
LENS_2.8V_REG
CH4_D_2.8V
REG_GND
IC_6401_IC_6002/IC_6201_CLK
XSYS_RST
XRST_IC_6401_CPU
CAM_SCK
XCS_SIO_CAM
CAM_SO
CAM_SI
VST_C_RST_PIT/CLK
VST_C_RST_YAW/DATA
CAM_VD
PITCH_AD_IC_6401
YAW_AD_IC_6401
PITCH_AD
YAW_AD
P_DRIVE_B
P_DRIVE_A
Y_DRIVE_B
Y_DRIVE_A
ZOOM_XA
ZOOM_A
ZOOM_XB
ZOOM_B
FOCUS-
FOCUS+
IRIS_XA
IRIS_A
IRIS_XB
IRIS_B
A_2.8V_IC_6401
D_2.8V_IC_6401
VAP_DD_ON
Q6403
2SA2154MFV(TL3SONY)
B+SWITCH
Q6401
RN1104MFV(TL3SONY)
Q6404
2SA2154MFV(TL3SONY)
B+SWITCH
Q6402
RN1104MFV(TL3SONY)

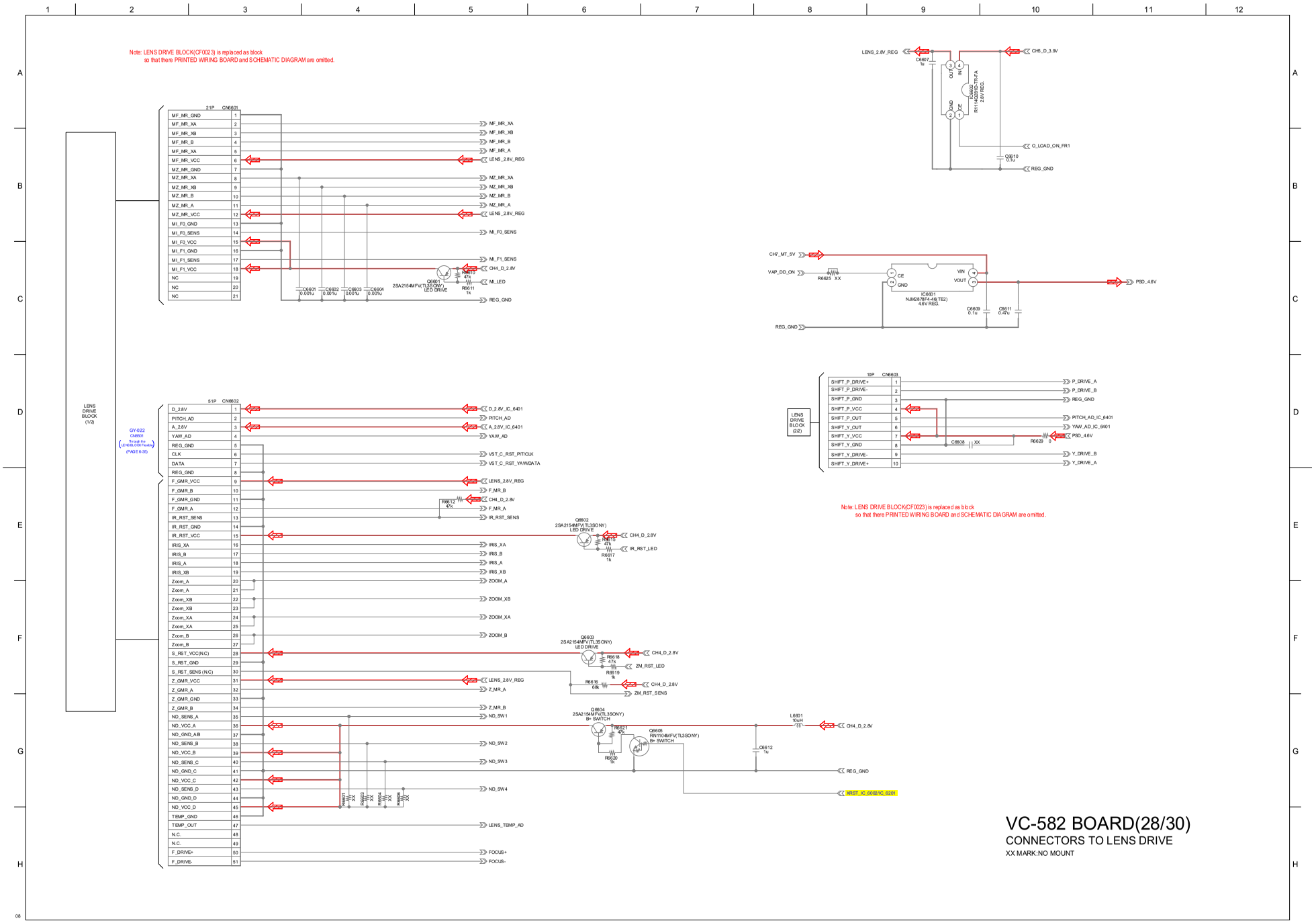
Note: LENS DRIVE BLOCK(CF0023) is replaced as block
so that there PRINTED WIRING BOARD and SCHEMATIC DIAGRAM are omitted.
LENS DRIVE BLOCK (1/2)
GY-022
CN6601
(Through B+ LENS BLOCK Feeder)
(PAGE 6-30)
21P CN6601
MF_MR_GND
MF_MR_XA
MF_MR_XB
MF_MR_B
MF_MR_XA
MF_MR_VCC
MZ_MR_GND
MZ_MR_XA
MZ_MR_XB
MZ_MR_B
MZ_MR_A
MZ_MR_VCC
MI_F0_GND
MI_F0_SENS
MI_F0_VCC
MI_F1_GND
MI_F1_SENS
MI_F1_VCC
NC
C6601 0.001u
C6602 0.001u
C6603 0.001u
C6604 0.001u
Q6601 2SA2154MFV(TL3SONY) LED DRIVE
R6610 47k
R6611 1k
CH4_D_2.8V
MI_LED
REG_GND
LENS_2.8V_REG
C6607 1u
IC6602 R1114Q281D-TR-FA 2.8V REG.
CH5_D_3.9V
O_LOAD_ON_FR1
C6610 0.1u
CH7_MT_5V
VAP_DD_ON
R6625 XX
IC6601 NJM2878F14-46(TE2) 4.6V REG.
C6609 0.1u
C6611 0.47u
PSD_4.6V
51P CN6602
D_2.8V
PITCH_AD
A_2.8V
YAW_AD
REG_GND
CLK
DATA
REG_GND
F_GMR_VCC
F_GMR_B
F_GMR_GND
F_GMR_A
IR_RST_SENS
IR_RST_GND
IR_RST_VCC
IRIS_XA
IRIS_B
IRIS_A
IRIS_XB
Zoom_A
Zoom_A
Zoom_XB
Zoom_XB
Zoom_XA
Zoom_XA
Zoom_B
Zoom_B
S_RST_VCC(N.C)
S_RST_GND
S_RST_SENS (N.C)
Z_GMR_VCC
Z_GMR_A
Z_GMR_GND
Z_GMR_B
ND_SENS_A
ND_VCC_A
ND_GND_AB
ND_SENS_B
ND_VCC_B
ND_SENS_C
ND_GND_C
ND_VCC_C
ND_SENS_D
ND_GND_D
ND_VCC_D
TEMP_GND
TEMP_OUT
N.C.
N.C.
F_DRIVE+
F_DRIVE-
D_2.8V_IC_6401
PITCH_AD
A_2.8V_IC_6401
YAW_AD
VST_C_RST_PIT/CLK
VST_C_RST_YAW/DATA
LENS_2.8V_REG
F_MR_B
CH4_D_2.8V
F_MR_A
IR_RST_SENS
Q6602 2SA2154MFV(TL3SONY) LED DRIVE
R6615 47k
R6617 1k
IR_RST_LED
IRIS_XA
IRIS_B
IRIS_A
IRIS_XB
ZOOM_A
ZOOM_XB
ZOOM_XA
ZOOM_B
Q6603 2SA2154MFV(TL3SONY) LED DRIVE
R6618 47k
R6619 1k
ZM_RST_LED
R6616 68k
ZM_RST_SENS
Z_MR_B
ND_SW1
Q6604 2SA2154MFV(TL3SONY) B+ SWITCH
R6621 47k
R6620 1k
Q6605 RN1104MFV(TL3SONY) B+ SWITCH
L6601 10uH
C6612 1u
ND_SW2
ND_SW3
ND_SW4
R6601 XX
R6602 XX
R6603 XX
R6604 XX
R6605 XX
XRST_IC_6002/IC_6201
LENS_TEMP_AD
FOCUS+
FOCUS-
LENS DRIVE BLOCK (2/2)
10P CN6603
SHIFT_P_DRIVE+
SHIFT_P_DRIVE-
SHIFT_P_GND
SHIFT_P_VCC
SHIFT_P_OUT
SHIFT_Y_OUT
SHIFT_Y_VCC
SHIFT_Y_GND
SHIFT_Y_DRIVE-
SHIFT_Y_DRIVE+
P_DRIVE_A
P_DRIVE_B
REG_GND
PITCH_AD_IC_6401
YAW_AD_IC_6401
PSD_4.6V
C6608 XX
R6629 0
Y_DRIVE_B
Y_DRIVE_A
Note: LENS DRIVE BLOCK(CF0023) is replaced as block
so that there PRINTED WIRING BOARD and SCHEMATIC DIAGRAM are omitted.
VC-582 BOARD(28/30)
CONNECTORS TO LENS DRIVE
XX MARK:NO MOUNT

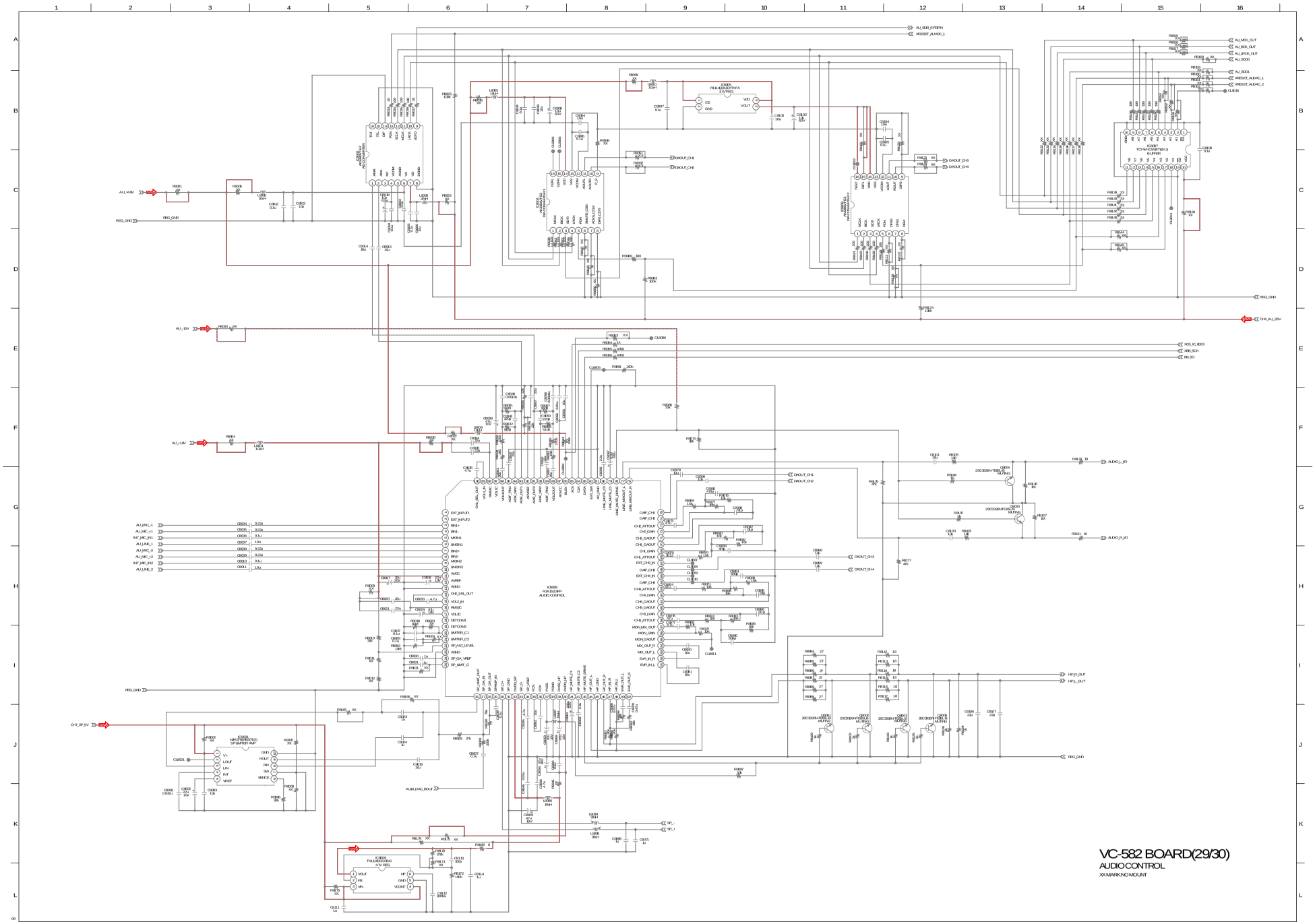
VC-582 BOARD(29/30)
AUDIO CONTROL
XX:MARK:NO MOUNT

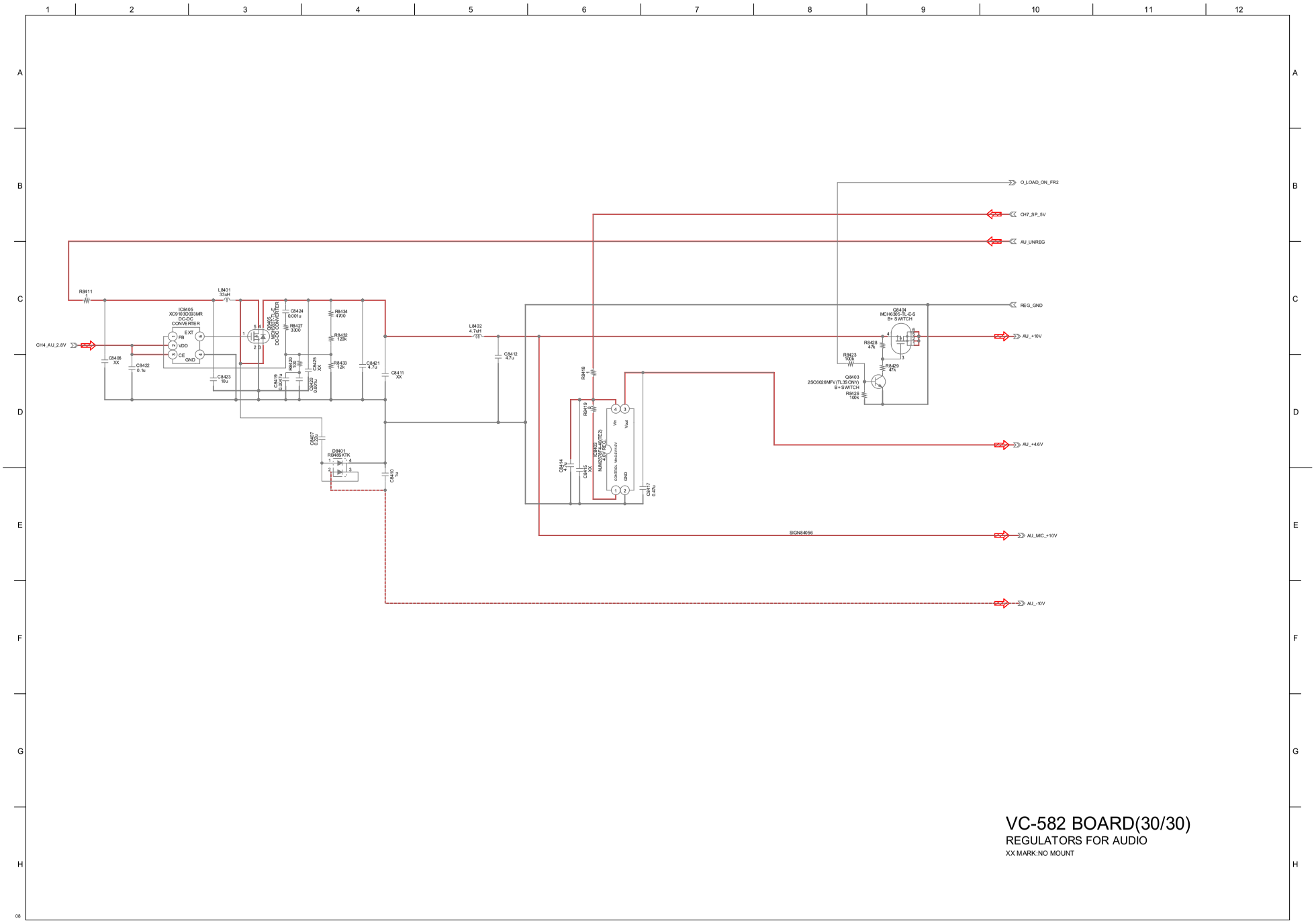

VC-582 BOARD(30/30)

REGULATORS FOR AUDIO

XX MARK:NO MOUNT

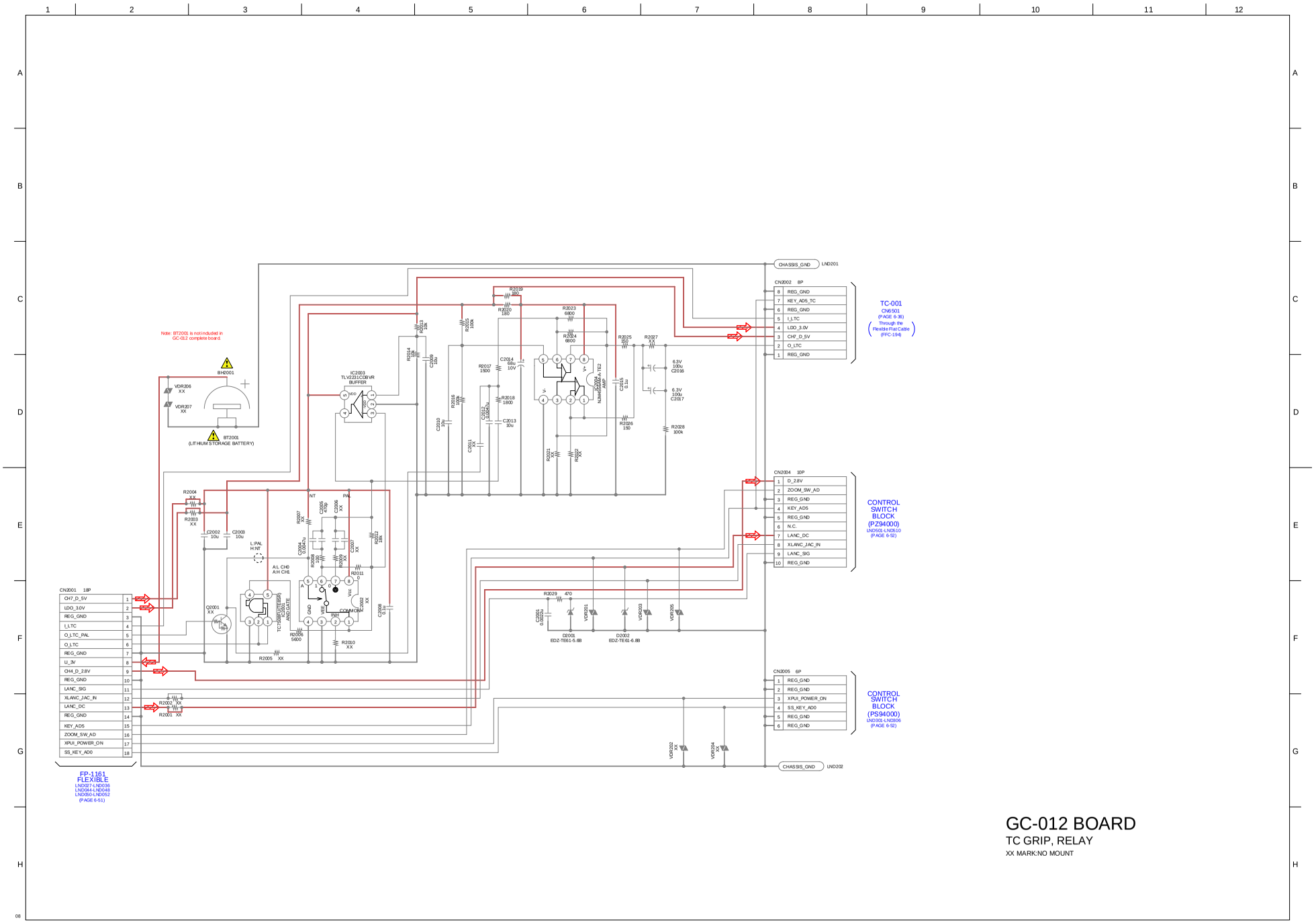
Note: BT2001 is not included in GC-012 complete board.
BH2001
BT2001
(LITHIUM STORAGE BATTERY)
VDR206 XX
VDR207 XX
IC2203
TLV2231CDBVR
BUFFER
CHASSIS_GND
LND201
CN2002 8P
REG_GND
KEY_AD5_TC
REG_GND
I_LTC
LDO_3.0V
CH7_D_5V
O_LTC
REG_GND
TC-001
CN6301
(PAGE 6-36)
Through the Flexible Flat Cable (FFC-194)
CN2004 10P
D_2.8V
ZOOM_SW_AD
REG_GND
KEY_AD5
REG_GND
N.C.
LANC_DC
XLANC_JAC_IN
LANC_SIG
REG_GND
CONTROL SWITCH BLOCK
(PZ94000)
LND501-LND510
(PAGE 6-52)
CN2005 6P
REG_GND
REG_GND
XPUI_POWER_ON
SS_KEY_AD0
REG_GND
REG_GND
CONTROL SWITCH BLOCK
(PS94000)
LND301-LND306
(PAGE 6-52)
CHASSIS_GND
LND202
CN3001 18P
CH7_D_5V
LDO_3.0V
REG_GND
I_LTC
O_LTC
O_LTC_PAL
REG_GND
U_3V
CH4_D_2.8V
REG_GND
LANC_SIG
XLANC_JAC_IN
LANC_DC
REG_GND
KEY_AD5
ZOOM_SW_AD
XPUI_POWER_ON
SS_KEY_AD0
FP-1161
FLEXIBLE
LND027-LND036
LND044-LND048
LND050-LND052
(PAGE 6-51)
L:PAL
H:NT
A:L CH0
A:H CH1
Q2001 XX
D2001
EDZ-TE61-5.6B
D2002
EDZ-TE61-6.8B
GC-012 BOARD
TC GRIP, RELAY
XX MARK:NO MOUNT

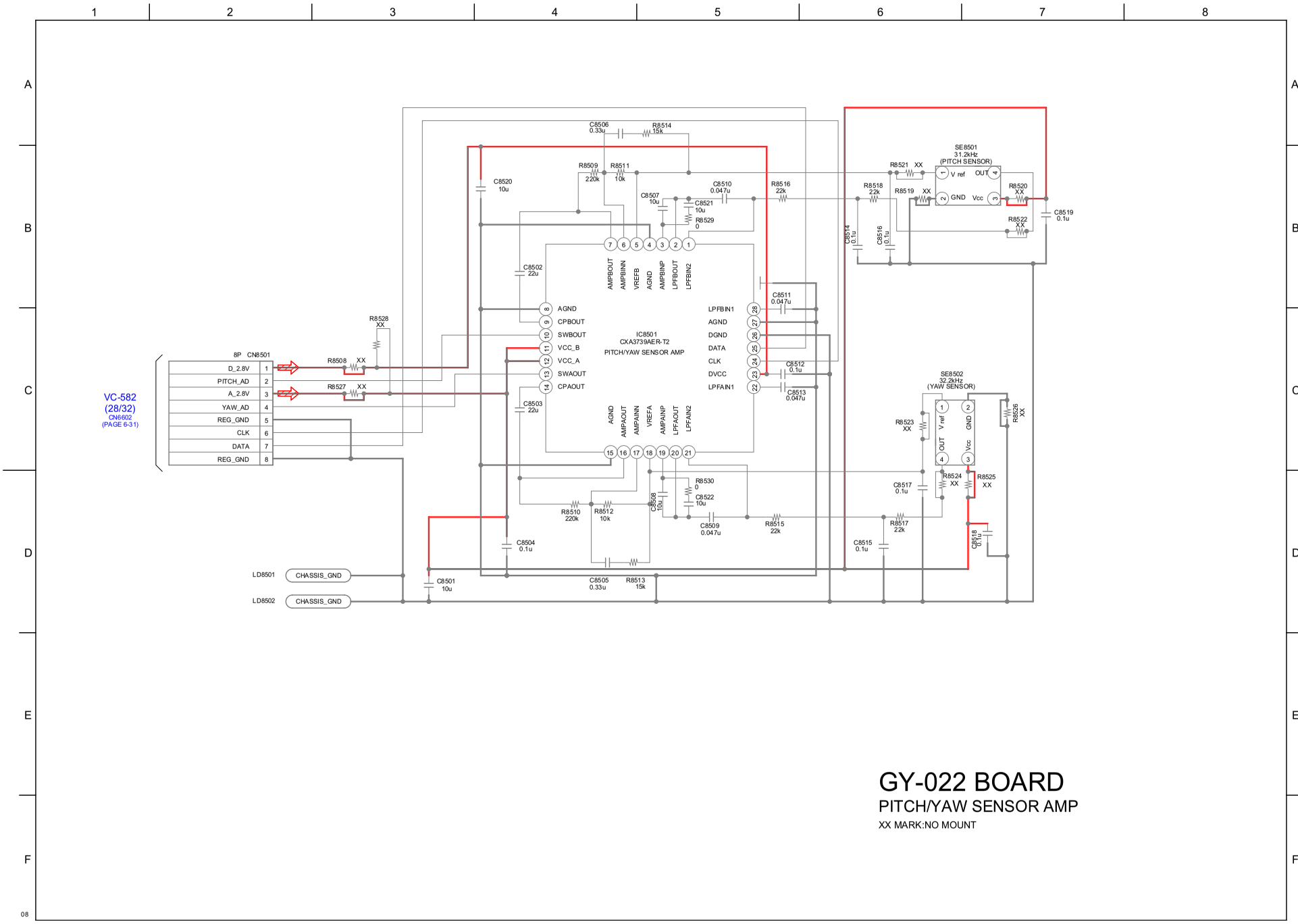

GY-022 BOARD

PITCH/YAW SENSOR AMP

XX MARK:NO MOUNT

08

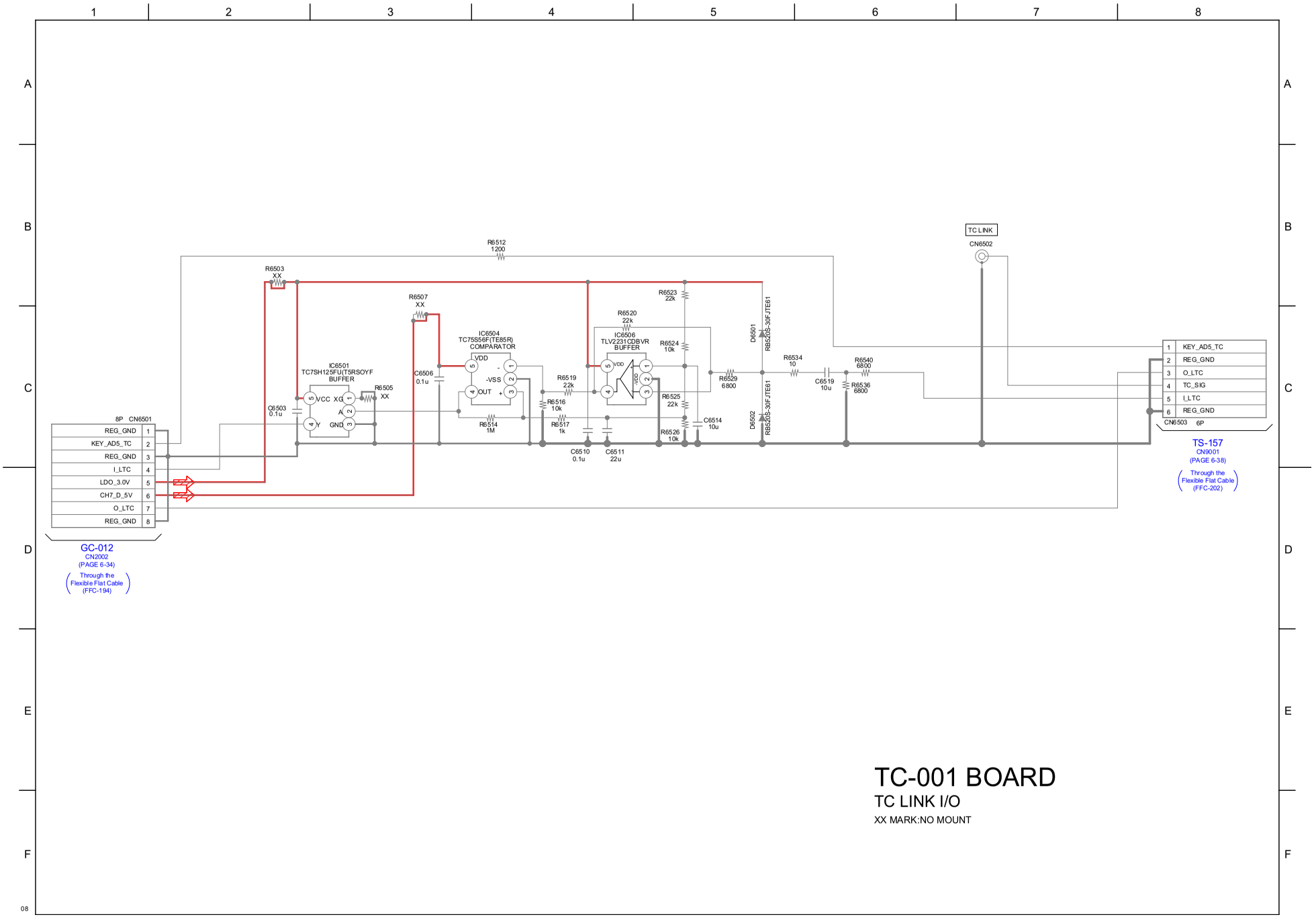

TC-001 BOARD

TC LINK I/O

XX MARK:NO MOUNT

08

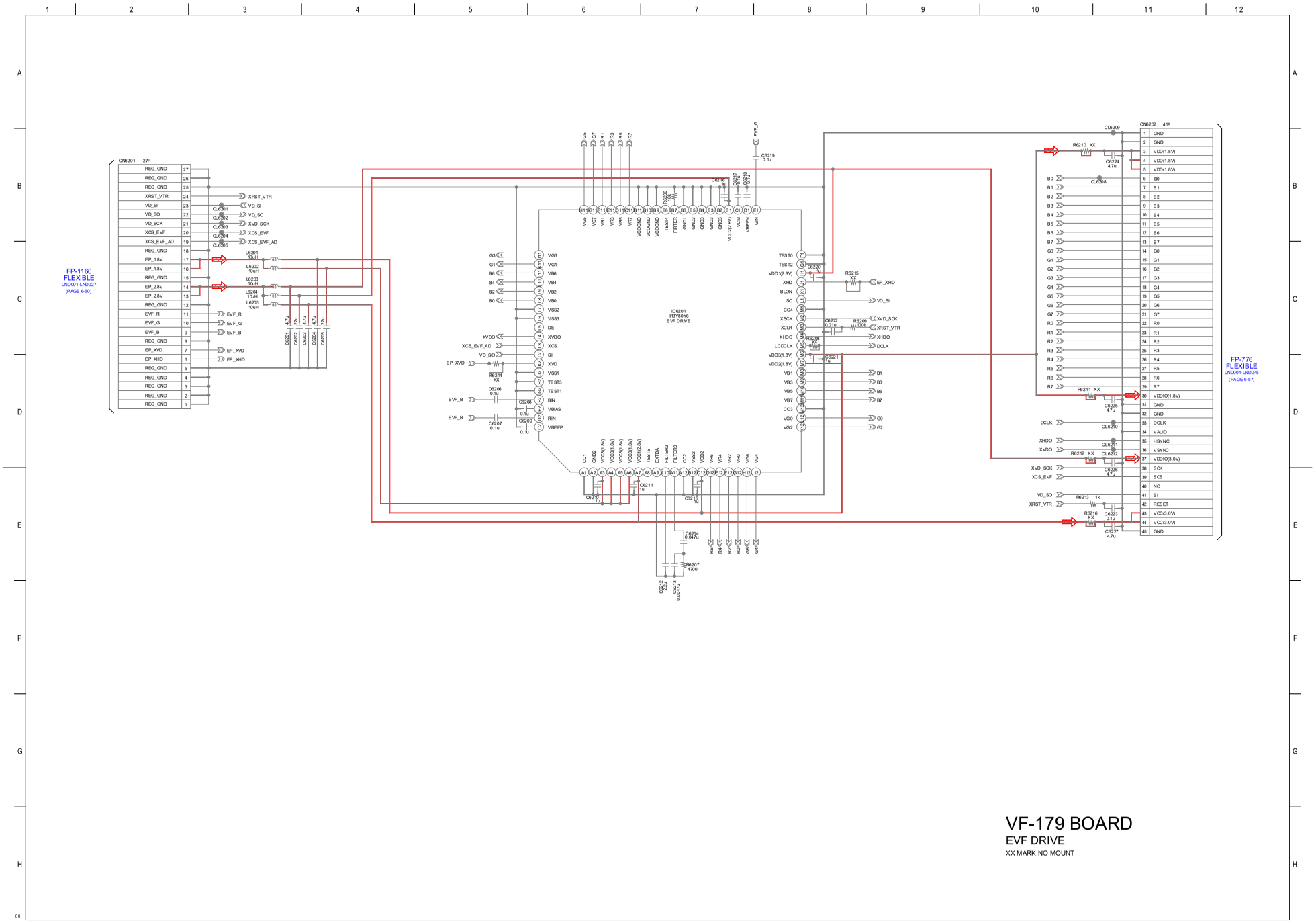

VF-179 BOARD

EVF DRIVE

XX MARK:NO MOUNT

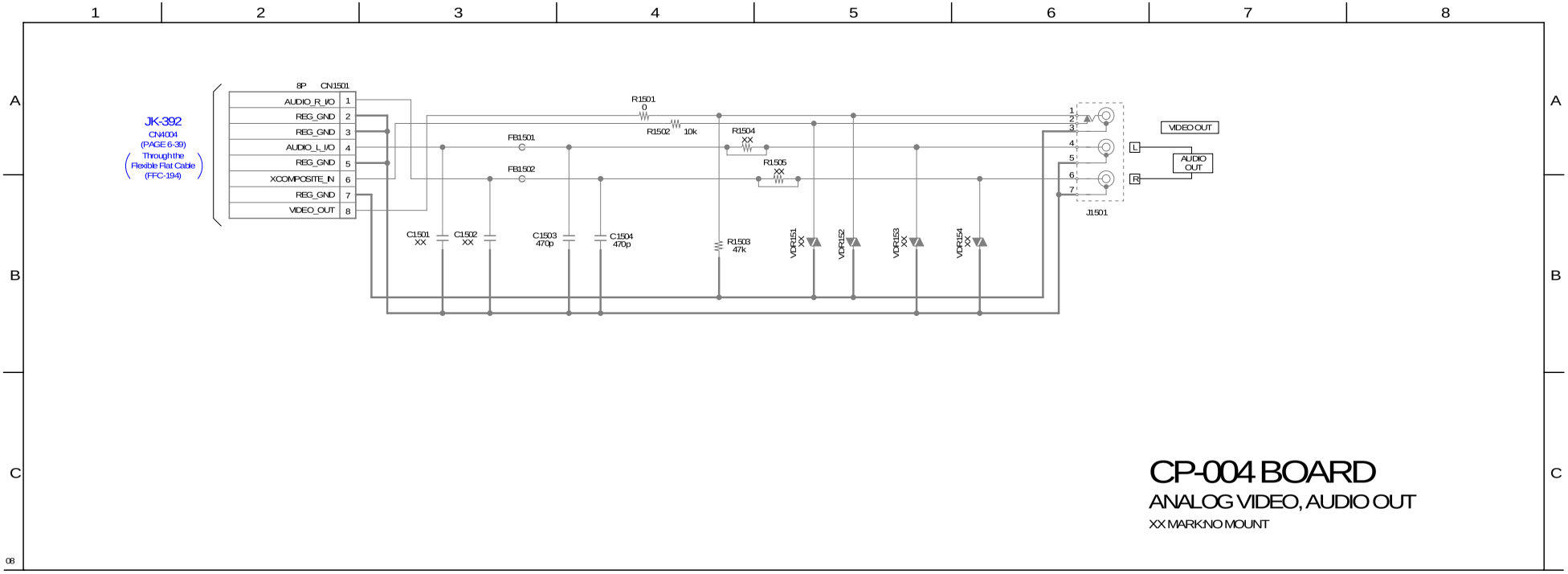
JK-392
CN4004
(PAGE 6-39)
Through the Flexible Flat Cable (FFC-194)
8P CN1501
AUDIO_R_I/O 1
REG_GND 2
REG_GND 3
AUDIO_L_I/O 4
REG_GND 5
XCOMPOSITE_IN 6
REG_GND 7
VIDEO_OUT 8
R1501 0
R1502 10k
R1504 XX
R1505 XX
FB1501
FB1502
C1501 XX
C1502 XX
C1503 470p
C1504 470p
R1503 47k
VDR1501 XX
VDR1502
VDR1503 XX
VDR1504 XX
J1501
VIDEO OUT
L
AUDIO OUT
R
CP-004 BOARD
ANALOG VIDEO, AUDIO OUT
XX MARK:NO MOUNT

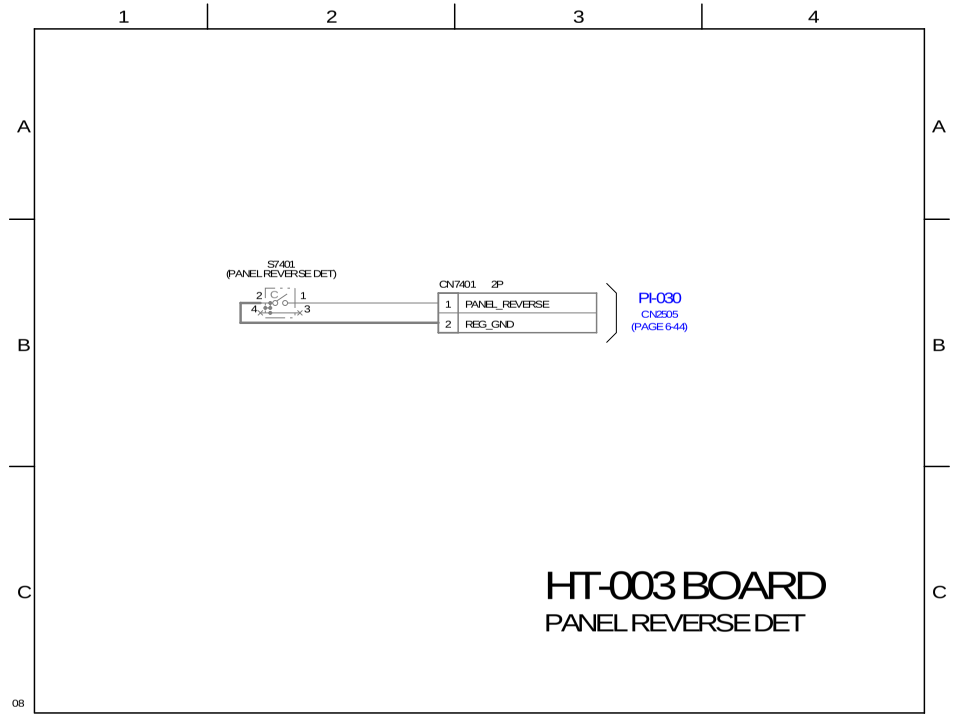
S7401
(PANEL REVERSE DET)
CN7401 2P
1 PANEL_REVERSE
2 REG_GND
PI-030
CN2505
(PAGE 6-44)
HT-003 BOARD
PANEL REVERSE DET

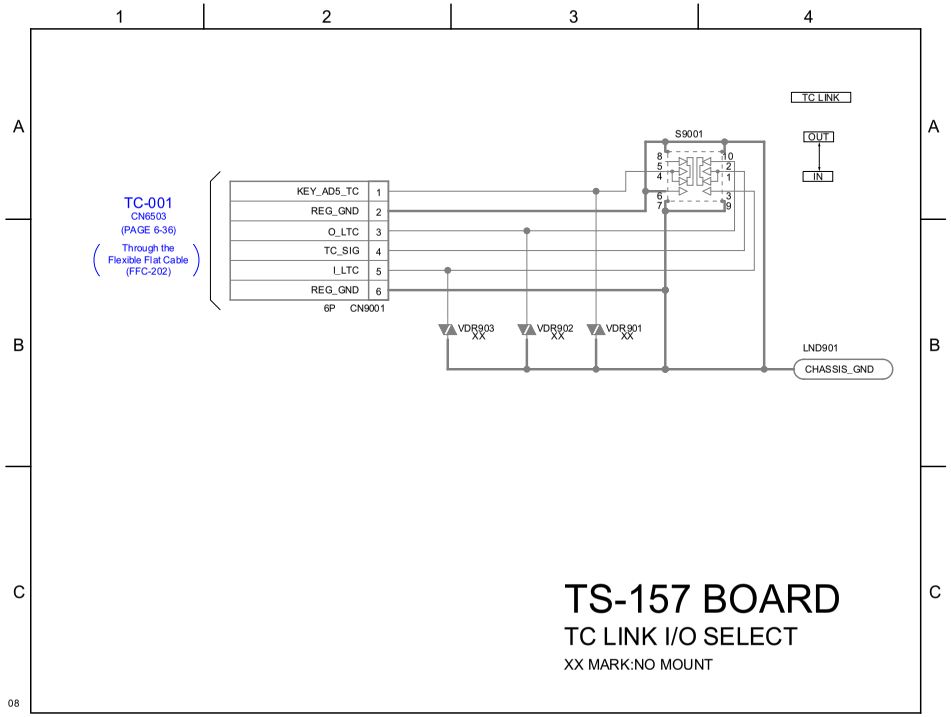
TC-001
CN6503
(PAGE 6-36)
Through the Flexible Flat Cable (FFC-202)
KEY_AD5_TC 1
REG_GND 2
O_LTC 3
TC_SIG 4
I_LTC 5
REG_GND 6
6P CN9001
S9001
TC LINK
OUT
IN
VDR903 XX
VDR902 XX
VDR901 XX
LND901
CHASSIS_GND
TS-157 BOARD
TC LINK I/O SELECT
XX MARK:NO MOUNT

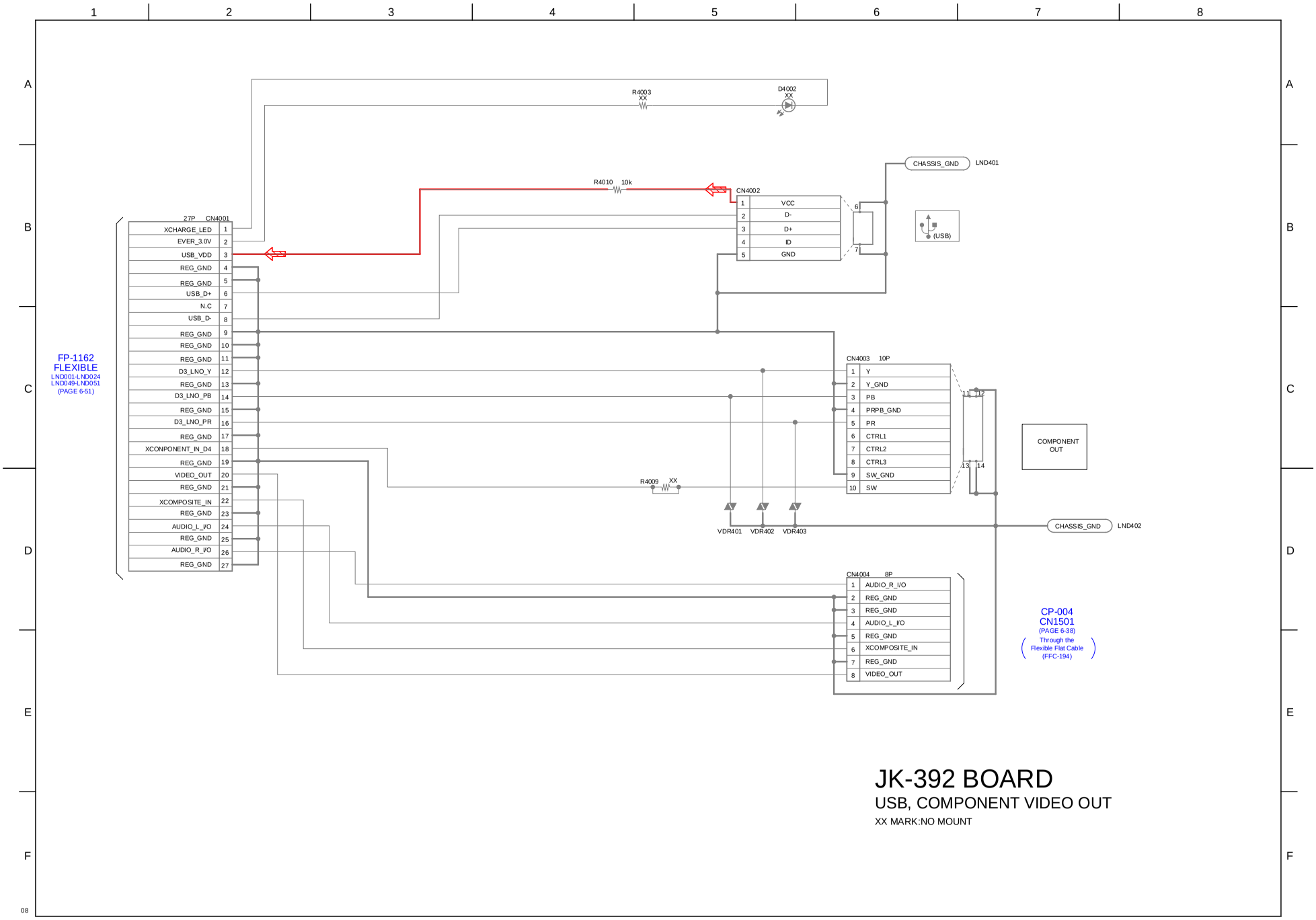
R4003
XX
D4002
XX
CHASSIS_GND
LND401
R4010
10k
CN4002
1 VCC
2 D-
3 D+
4 ID
5 GND
6
7
(USB)
27P CN4001
XCHARGE_LED 1
EVER_3.0V 2
USB_VDD 3
REG_GND 4
REG_GND 5
USB_D+ 6
N.C 7
USB_D- 8
REG_GND 9
REG_GND 10
REG_GND 11
D3_LNO_Y 12
REG_GND 13
D3_LNO_PB 14
REG_GND 15
D3_LNO_PR 16
REG_GND 17
XCONPONENT_IN_D4 18
REG_GND 19
VIDEO_OUT 20
REG_GND 21
XCOMPOSITE_IN 22
REG_GND 23
AUDIO_L_I/O 24
REG_GND 25
AUDIO_R_I/O 26
REG_GND 27
FP-1162
FLEXIBLE
LND001-LND024
LND049-LND051
(PAGE 6-51)
CN4003 10P
1 Y
2 Y_GND
3 PB
4 PRPB_GND
5 PR
6 CTRL1
7 CTRL2
8 CTRL3
9 SW_GND
10 SW
11 12
13 14
COMPONENT
OUT
R4009
XX
VDR401
VDR402
VDR403
CHASSIS_GND
LND402
CN4004 8P
1 AUDIO_R_I/O
2 REG_GND
3 REG_GND
4 AUDIO_L_I/O
5 REG_GND
6 XCOMPOSITE_IN
7 REG_GND
8 VIDEO_OUT
CP-004
CN1501
(PAGE 6-38)
Through the
Flexible Flat Cable
(FFC-194)
JK-392 BOARD
USB, COMPONENT VIDEO OUT
XX MARK:NO MOUNT
08

Ver. 1.1 2010.01
The changed portions from
Ver. 1.0 are shown in blue.

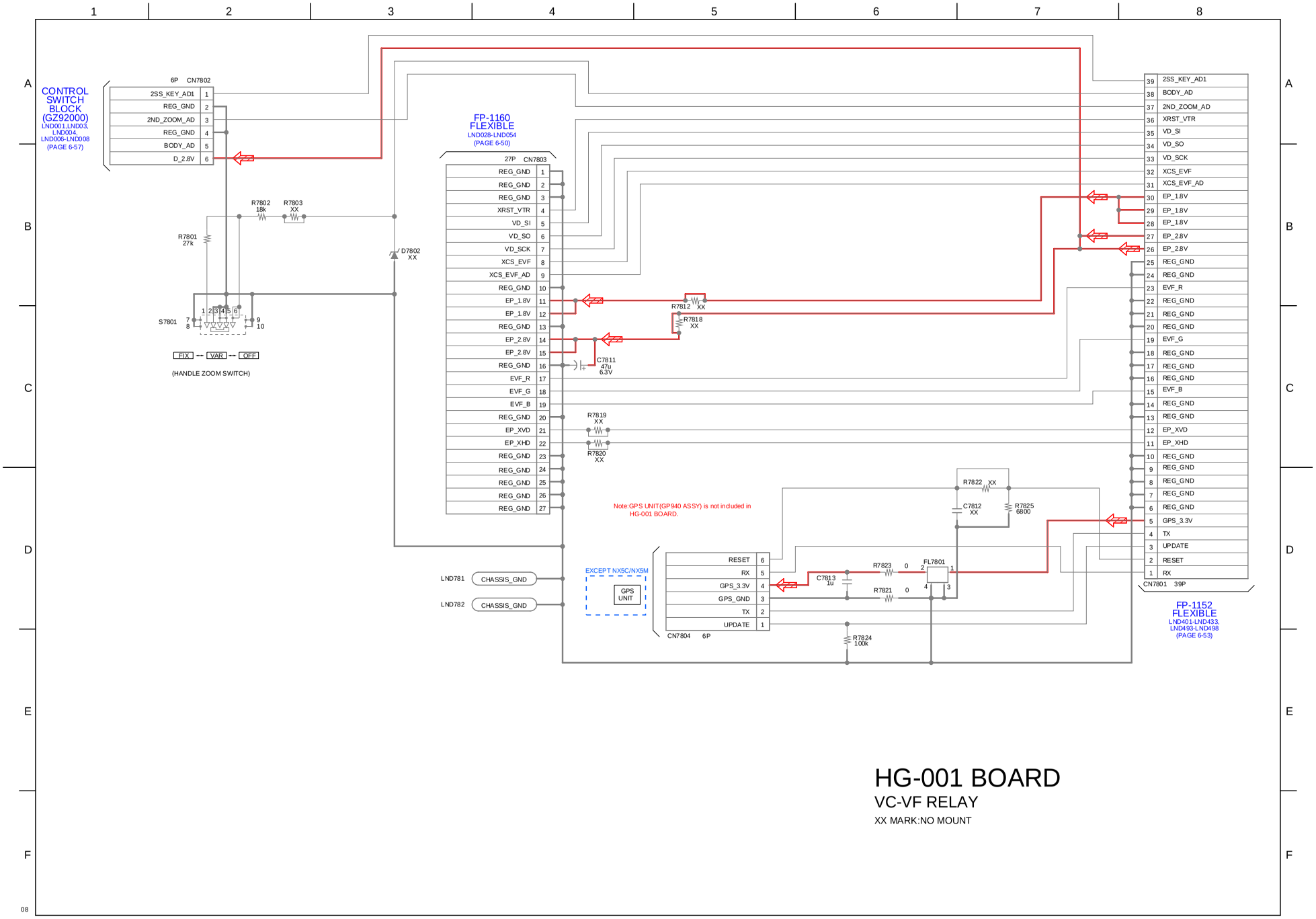

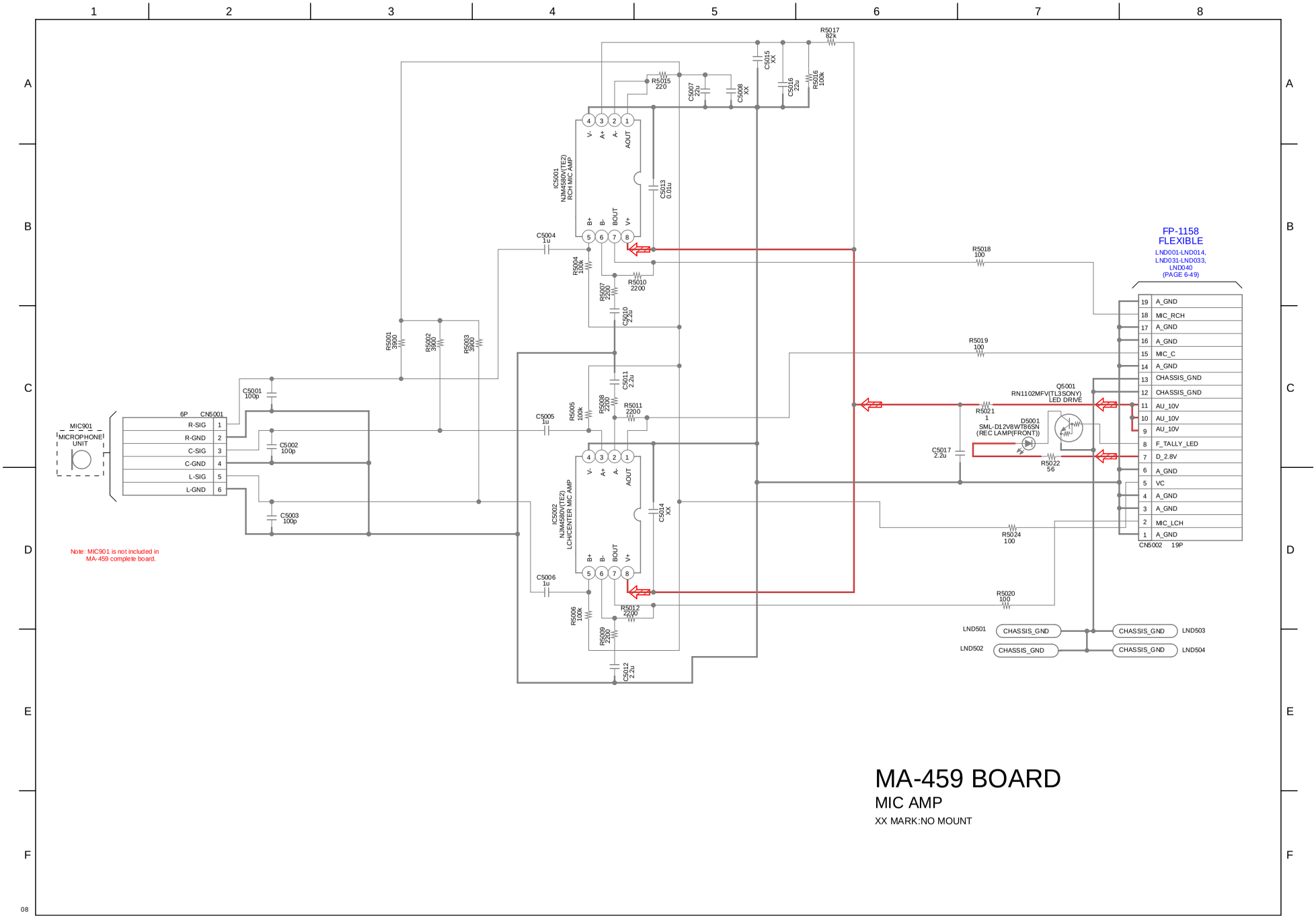
MA-459 BOARD
MIC AMP
XX MARK:NO MOUNT
MIC901
MICROPHONE UNIT
6P CN5001
R-SIG 1
R-GND 2
C-SIG 3
C-GND 4
L-SIG 5
L-GND 6
Note: MIC901 is not included in MA-459 complete board.
IC5001 NJM4580V(TE2) RCH MIC AMP
IC5002 NJM4580V(TE2) LCH/CENTER MIC AMP
V- A+ A- AOUT
B+ B- BOUT V+
FP-1158 FLEXIBLE
LND001-LND014, LND031-LND033, LND040 (PAGE 6-49)
CN5002 19P
19 A_GND
18 MIC_RCH
17 A_GND
16 A_GND
15 MIC_C
14 A_GND
13 CHASSIS_GND
12 CHASSIS_GND
11 AU_10V
10 AU_10V
9 AU_10V
8 F_TALLY_LED
7 D_2.8V
6 A_GND
5 VC
4 A_GND
3 A_GND
2 MIC_LCH
1 A_GND
Q5001 RN1102MFV(TL3SONY) LED DRIVE
D5001 SML-D12V8WT86SN (REC LAMP(FRONT))
LND501 CHASSIS_GND
LND502 CHASSIS_GND
LND503 CHASSIS_GND
LND504 CHASSIS_GND

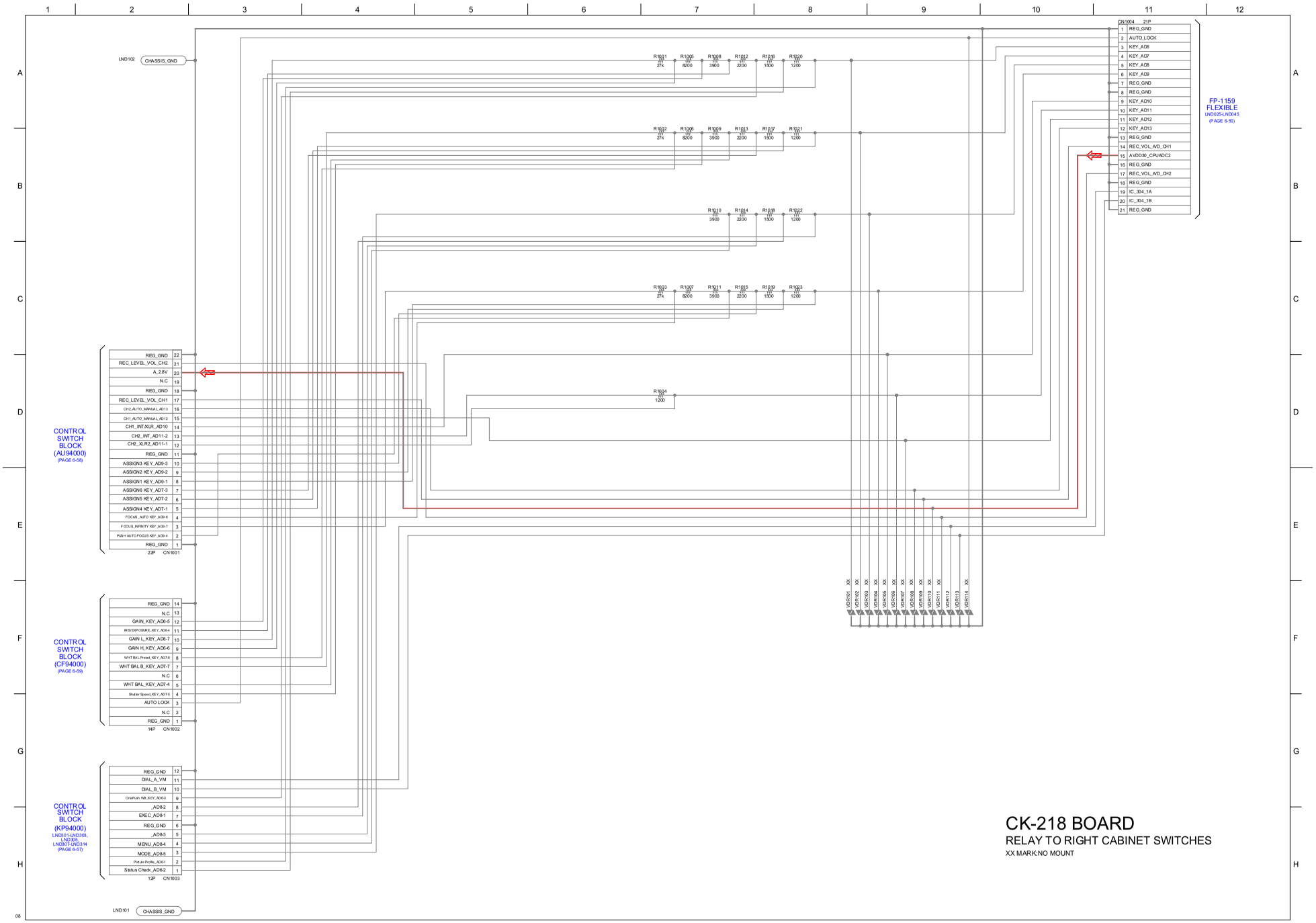
CK-218 BOARD
RELAY TO RIGHT CABINET SWITCHES
XX MARK:NO MOUNT
CONTROL SWITCH BLOCK (AU94000)
(PAGE 6-58)
CONTROL SWITCH BLOCK (CF94000)
(PAGE 6-59)
CONTROL SWITCH BLOCK (KP94000)
LND3001-LND3303, LND3306, LND3307-LND3314
(PAGE 6-57)
FP-1159 FLEXIBLE
LND025-LND045
(PAGE 6-50)
CN1004 21P
CN1001 23P
CN1002 14P
CN1003 12P
LND102 CHASSIS_GND
LND101 CHASSIS_GND

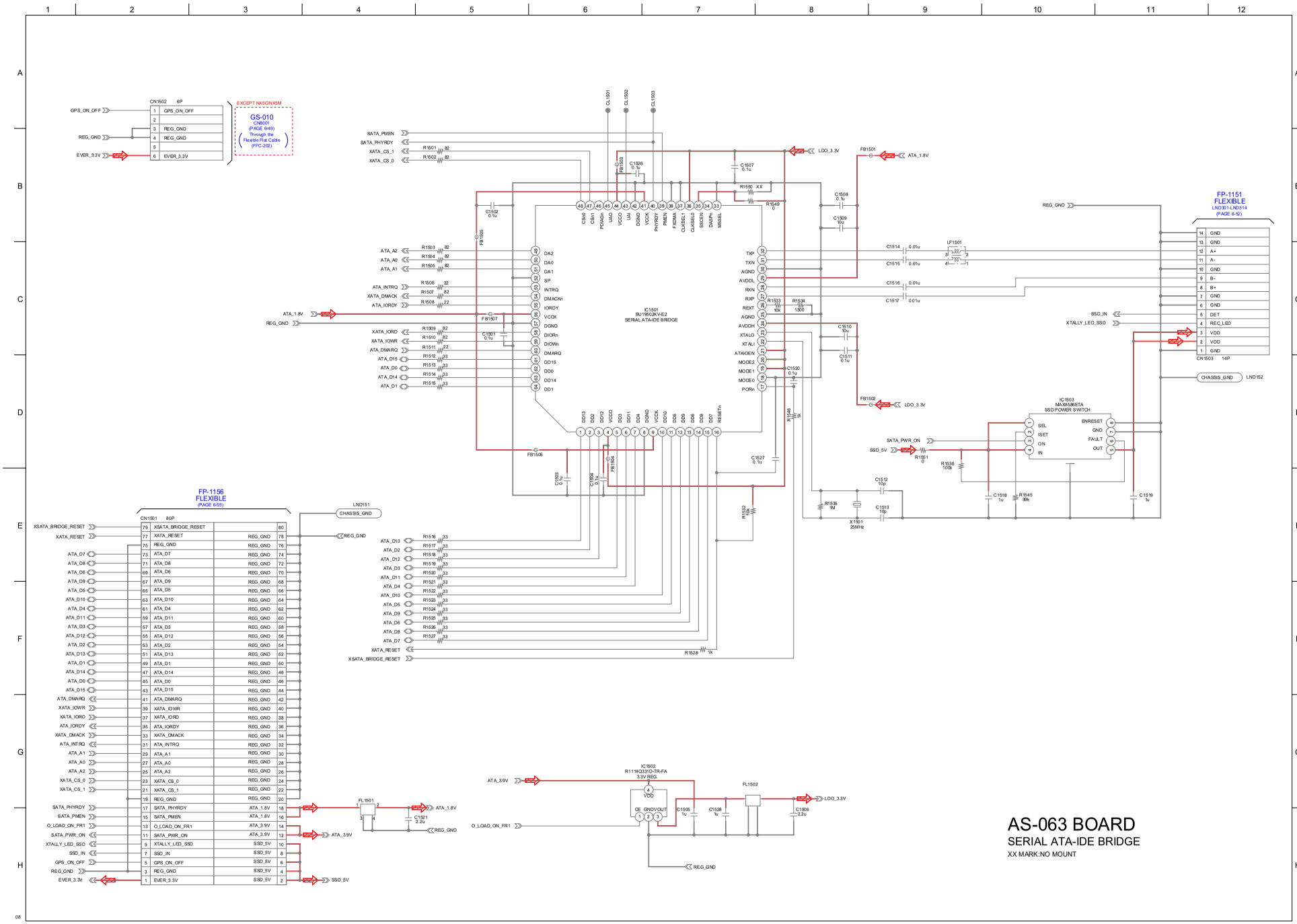
AS-063 BOARD
SERIAL ATA-IDE BRIDGE
XX MARK:NO MOUNT
IC1501
BU19502KV-E2
SERIAL ATA-IDE BRIDGE
FP-1151
FLEXIBLE
LND301-LND314
(PAGE 6-52)
FP-1156
FLEXIBLE
(PAGE 6-55)
GS-010
CN6001
(PAGE 6-49)
Through the
Flexible Flat Cable
(FFC-202)
EXCEPT NX5C/NX5M
IC1503
MAX6598ETA
SSD POWER SWITCH
IC1502
R1114Q331D-TR-FA
3.3V REG.
X1501
25MHz
LF1501
FL1501
FL1502
CN1502 6P
CN1503 14P
CN1501 80P

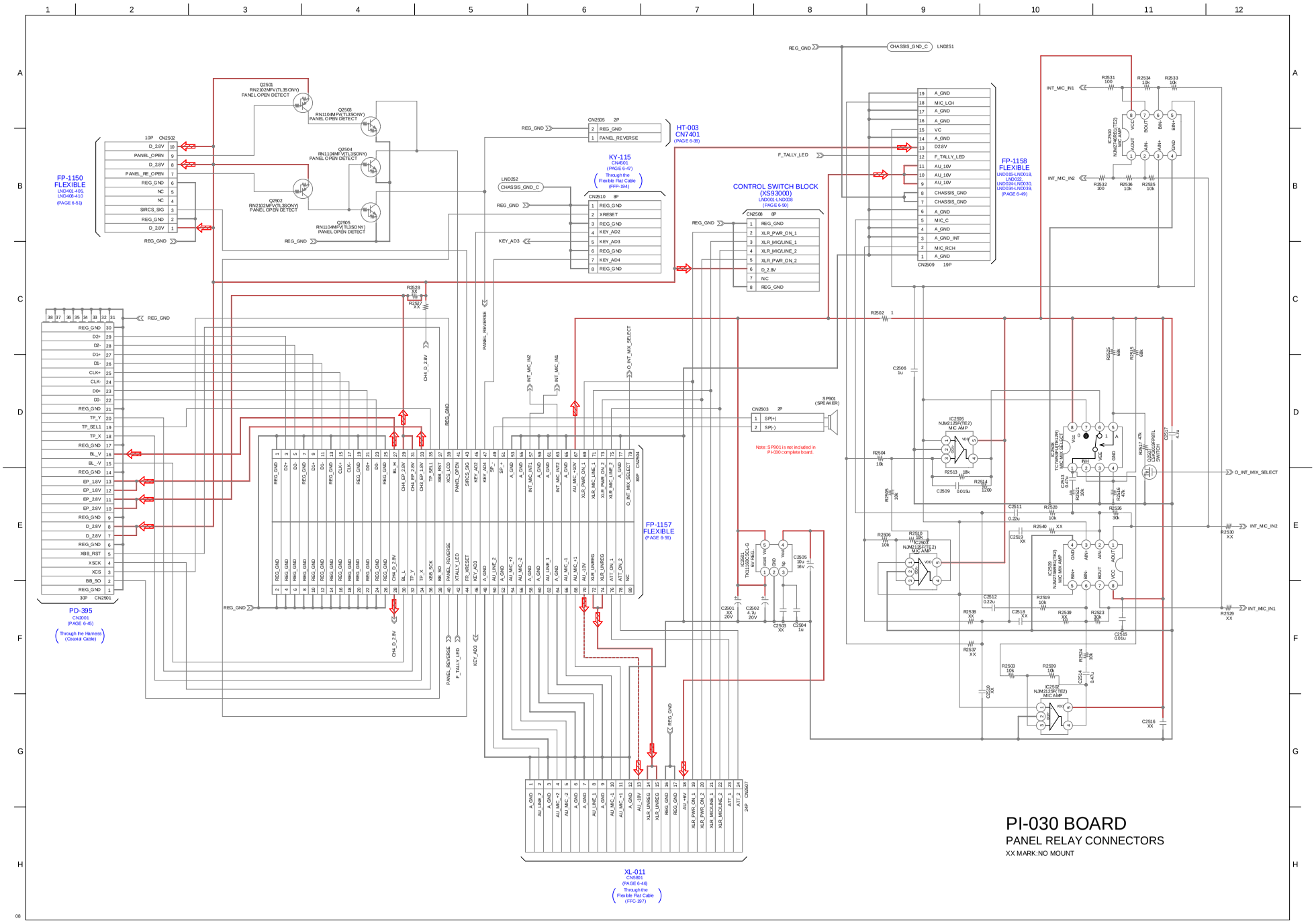
FP-1150
FLEXIBLE
LND401-405,
LND408-410
(PAGE 6-51)
CN2502
10P
D_2.8V
PANEL_OPEN
D_2.8V
PANEL_RE_OPEN
REG_GND
NC
NC
SIRCS_SIG
REG_GND
D_2.8V
Q2501
RN2102MFV(TL3SONY)
PANEL OPEN DETECT
Q2503
RN1104MFV(TL3SONY)
PANEL OPEN DETECT
Q2504
RN1104MFV(TL3SONY)
PANEL OPEN DETECT
Q2502
RN2102MFV(TL3SONY)
PANEL OPEN DETECT
Q2505
RN1104MFV(TL3SONY)
PANEL OPEN DETECT
CN2505
2P
REG_GND
PANEL_REVERSE
HT-003
CN7401
(PAGE 6-38)
KY-115
CN4501
(PAGE 6-47)
Through the
Flexible Flat Cable
(FFP-394)
LND252
CHASSIS_GND_C
CN2510
8P
REG_GND
XRESET
REG_GND
KEY_AD2
KEY_AD3
REG_GND
KEY_AD4
REG_GND
KEY_AD3
CONTROL SWITCH BLOCK
(XS93000)
LND001-LND008
(PAGE 6-50)
CN2508
8P
REG_GND
XLR_PWR_ON_1
XLR_MIC/LINE_1
XLR_MIC/LINE_2
XLR_PWR_ON_2
D_2.8V
N.C
REG_GND
CHASSIS_GND_C
LND251
F_TALLY_LED
FP-1158
FLEXIBLE
LND035-LND018,
LND022,
LND034-LND030,
LND034-LND039,
(PAGE 6-49)
CN2509
19P
A_GND
MIC_LCH
A_GND
A_GND
VC
A_GND
D2.8V
F_TALLY_LED
AU_10V
AU_10V
AU_10V
CHASSIS_GND
CHASSIS_GND
A_GND
MIC_C
A_GND
A_GND_INT
MIC_RCH
A_GND
INT_MIC_IN1
INT_MIC_IN2
IC2505
NJM2125F(TE2)
MIC AMP
IC2506
TC7W53FU(TE12R)
MIC MIX SELECT
IC2507
NJM2125F(TE2)
MIC AMP
IC2508
NJM2068M(TE2)
MIC MIX AMP
IC2509
NJM2068M(TE2)
MIC MIX AMP
IC2502
NJM2125F(TE2)
MIC AMP
CN2503
2P
SP(+)
SP(-)
SP901
(SPEAKER)
Note: SP901 is not included in
PI-030 complete board.
CN2504
80P
FP-1157
FLEXIBLE
(PAGE 6-56)
CN2501
30P
PD-395
CN2001
(PAGE 6-45)
Through the Harness
(Coaxial Cable)
CN2503
24P
XL-011
CN5801
(PAGE 6-46)
Through the
Flexible Flat Cable
(FFC-397)
O_INT_MIX_SELECT
INT_MIC_IN2
INT_MIC_IN1
CH4_D_2.8V
PANEL_REVERSE
F_TALLY_LED
KEY_AD3
REG_GND
PI-030 BOARD
PANEL RELAY CONNECTORS
XX MARK:NO MOUNT

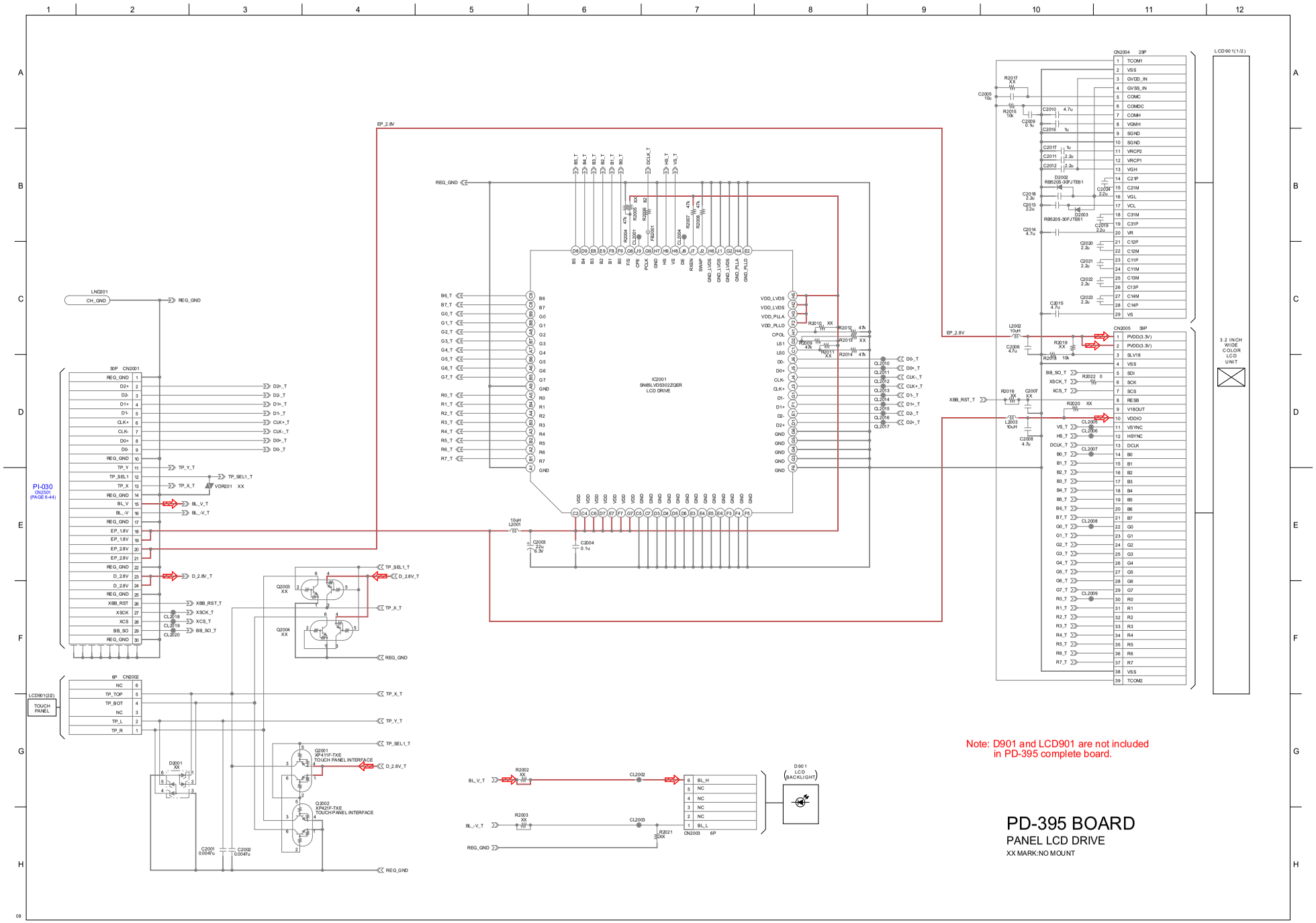
IC2001
SN65LVDS102ZQER
LCD DRIVE
CN2004 29P
CN2005 39P
LCD901(1/2)
3.2 INCH WIDE COLOR LCD UNIT
CN2001 30P
CN2002 6P
CN2003 6P
PI-030
CN2501
(PAGE 6-44)
LCD901(2/2)
TOUCH PANEL
D901
LCD
(BACKLIGHT)
Q2001
XP411F-TXE
TOUCH PANEL INTERFACE
Q2002
XP421F-TXE
TOUCH PANEL INTERFACE
EP_2.8V
REG_GND
LND201
CH_GND
XBB_RST_T
Note: D901 and LCD901 are not included
in PD-395 complete board.
PD-395 BOARD
PANEL LCD DRIVE
XX MARK:NO MOUNT

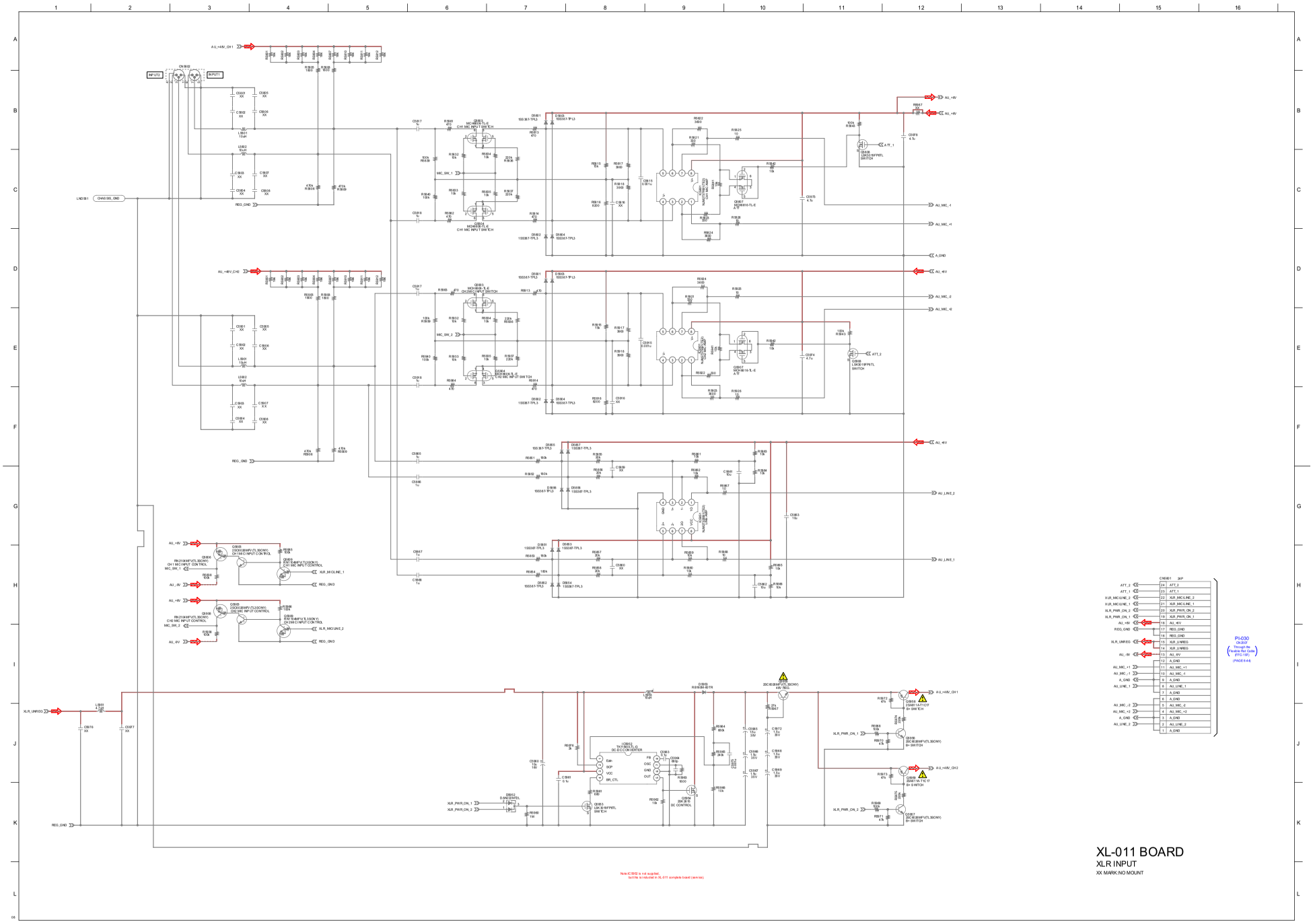
XL-011 BOARD
XLR INPUT
XX MARK:NO MOUNT
P1-030
CN801
(FFC-19F)
(PAGE E-4-4)
Note:IC5802 is not supplied,
but this is included in XL-011 complete board (service)

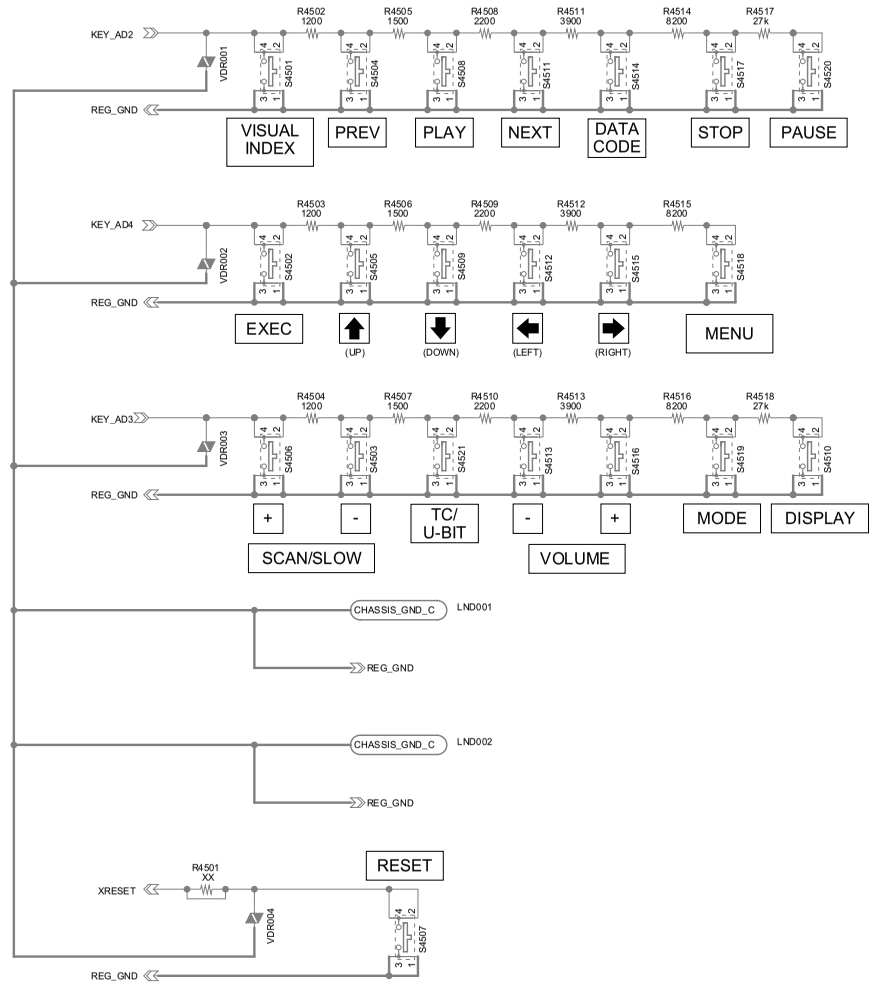

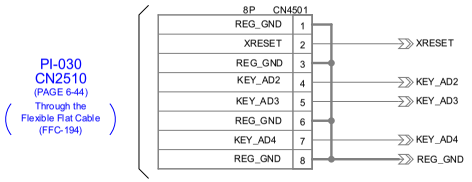

KY-115 BOARD

TOP PANEL SWITCHES

XX MARK:NO MOUNT

08

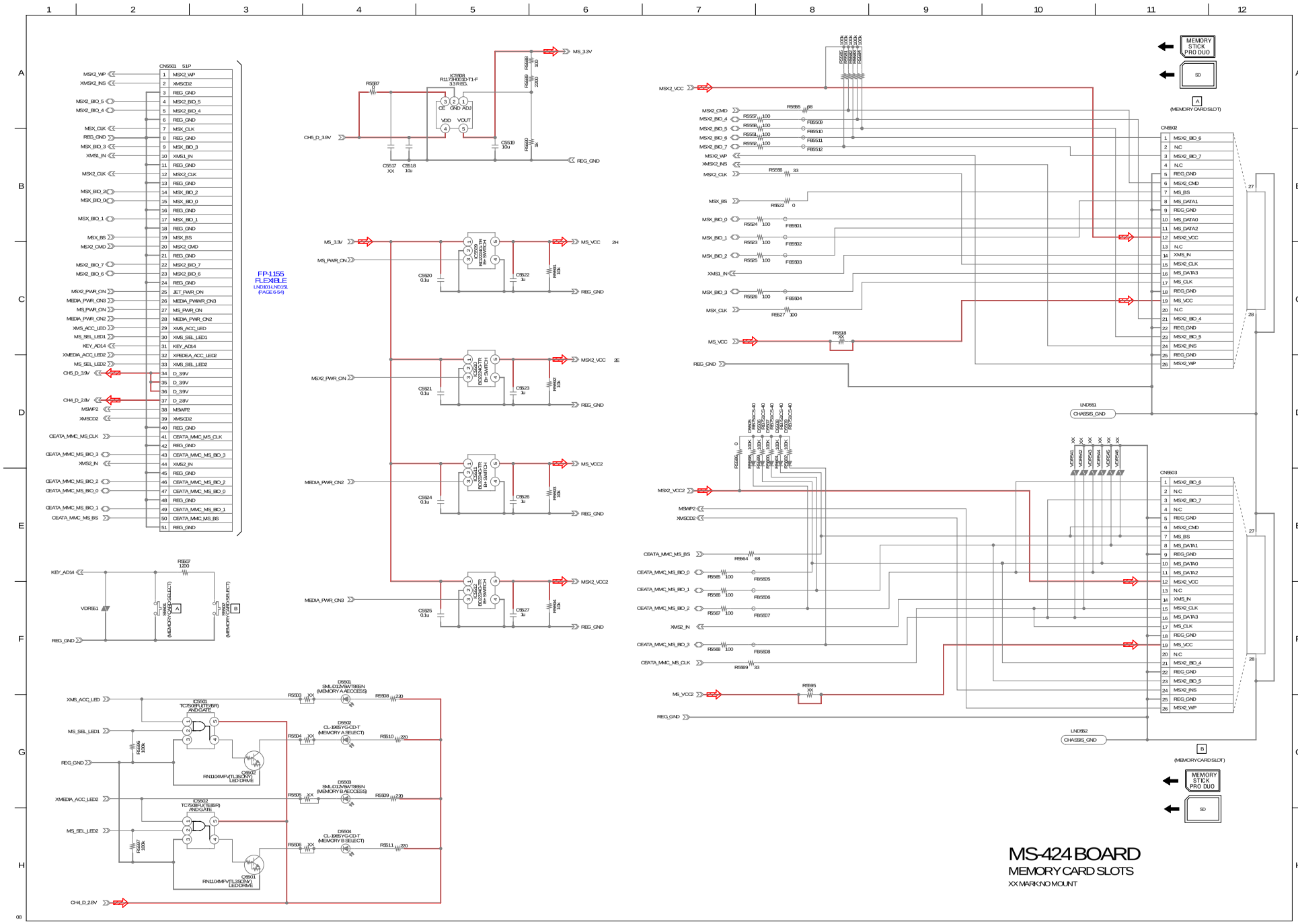
MS-424 BOARD
MEMORY CARD SLOTS
XX MARK:NO MOUNT
FP-1155
FLEXIBLE
CN5501 51P
CN5502
CN5503
MEMORY STICK PRO DUO
SD
(MEMORY CARD SLOT)
MS_3.3V
MS_VCC
MS2_VCC
MS_VCC2
MS2_VCC2
REG_GND
CHASSIS_GND

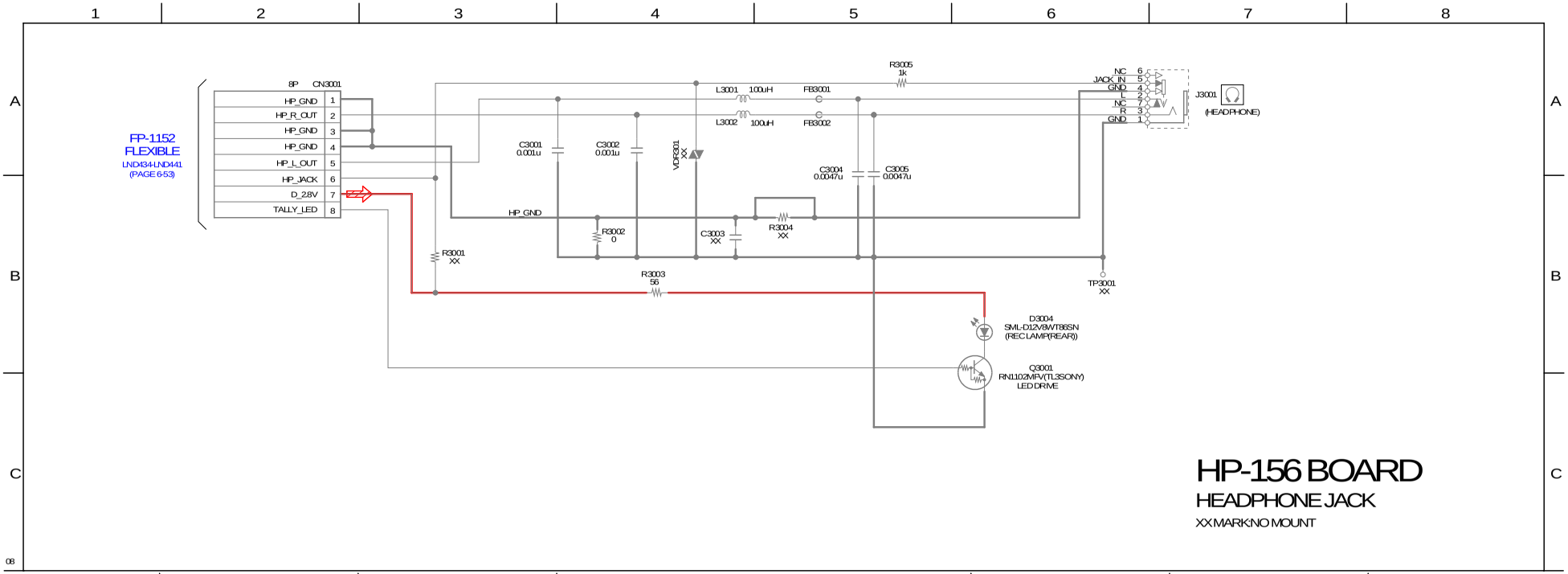
FP-1152
FLEXIBLE
LND434-LND441
(PAGE 6-53)
8P CN3001
HP_GND 1
HP_R_OUT 2
HP_GND 3
HP_GND 4
HP_L_OUT 5
HP_JACK 6
D_2.8V 7
TALLY_LED 8
R3001
XX
HP_GND
C3001
0.001u
C3002
0.001u
R3002
0
VDR301
XX
L3001 100uH
L3002 100uH
FB3001
FB3002
C3003
XX
R3004
XX
C3004
0.0047u
C3005
0.0047u
R3005
1k
R3003
56
NC 6
JACK_IN 5
GND 4
L 2
NC 7
R 3
GND 1
J3001
(HEADPHONE)
TP3001
XX
D3004
SML-D12V8WT86SN
(REC LAMP(REAR))
Q3001
RN1102MFV(TL3SONY)
LED DRIVE
HP-156 BOARD
HEADPHONE JACK
XX MARK:NO MOUNT

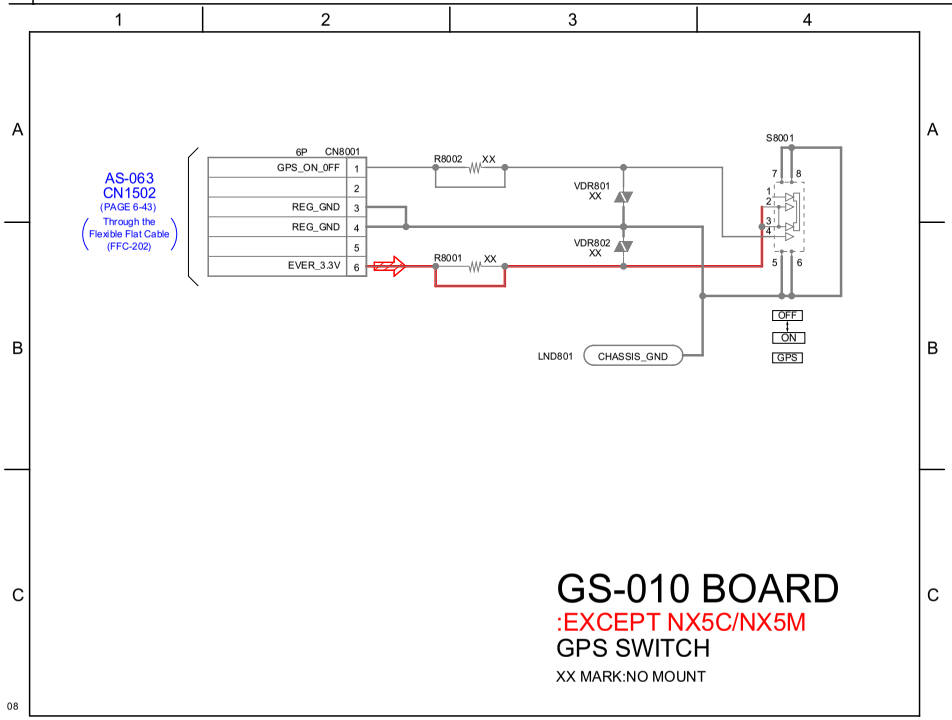
AS-063
CN1502
(PAGE 6-43)
Through the
Flexible Flat Cable
(FFC-202)
6P CN8001
GPS_ON_OFF 1
2
REG_GND 3
REG_GND 4
5
EVER_3.3V 6
R8002
XX
R8001
XX
VDR801
XX
VDR802
XX
S8001
OFF
ON
GPS
LND801
CHASSIS_GND
GS-010 BOARD
:EXCEPT NX5C/NX5M
GPS SWITCH
XX MARK:NO MOUNT

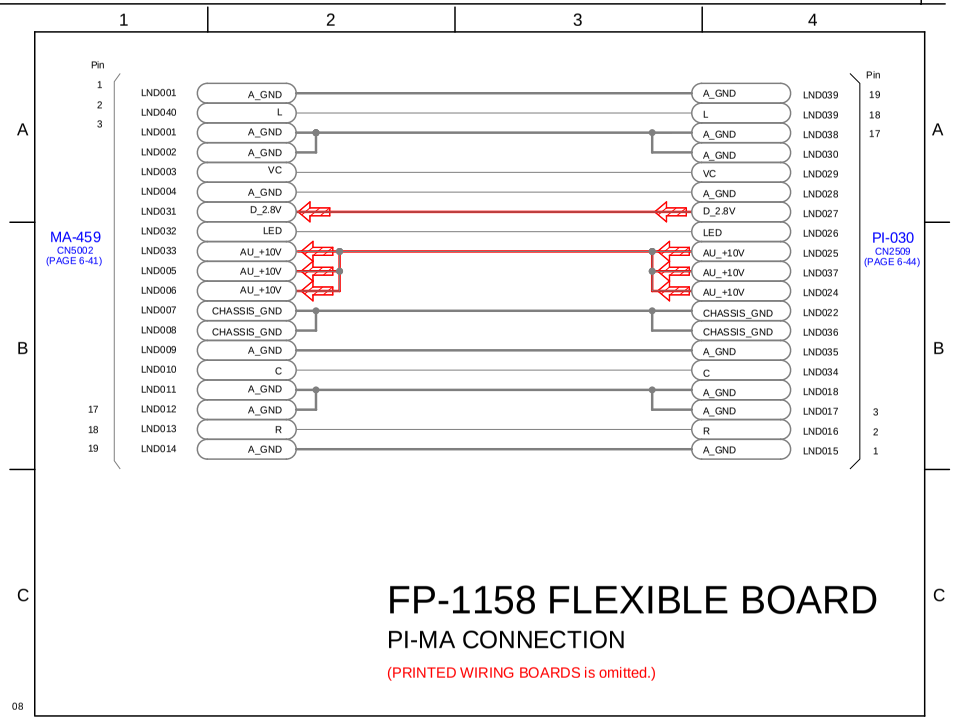
MA-459
CN5002
(PAGE 6-41)
Pin
1
2
3
17
18
19
LND001 A_GND
LND040 L
LND001 A_GND
LND002 A_GND
LND003 VC
LND004 A_GND
LND031 D_2.8V
LND032 LED
LND033 AU_+10V
LND005 AU_+10V
LND006 AU_+10V
LND007 CHASSIS_GND
LND008 CHASSIS_GND
LND009 A_GND
LND010 C
LND011 A_GND
LND012 A_GND
LND013 R
LND014 A_GND
A_GND LND039
L LND039
A_GND LND038
A_GND LND030
VC LND029
A_GND LND028
D_2.8V LND027
LED LND026
AU_+10V LND025
AU_+10V LND037
AU_+10V LND024
CHASSIS_GND LND022
CHASSIS_GND LND036
A_GND LND035
C LND034
A_GND LND018
A_GND LND017
R LND016
A_GND LND015
PI-030
CN2509
(PAGE 6-44)
Pin
19
18
17
3
2
1
FP-1158 FLEXIBLE BOARD
PI-MA CONNECTION
(PRINTED WIRING BOARDS is omitted.)

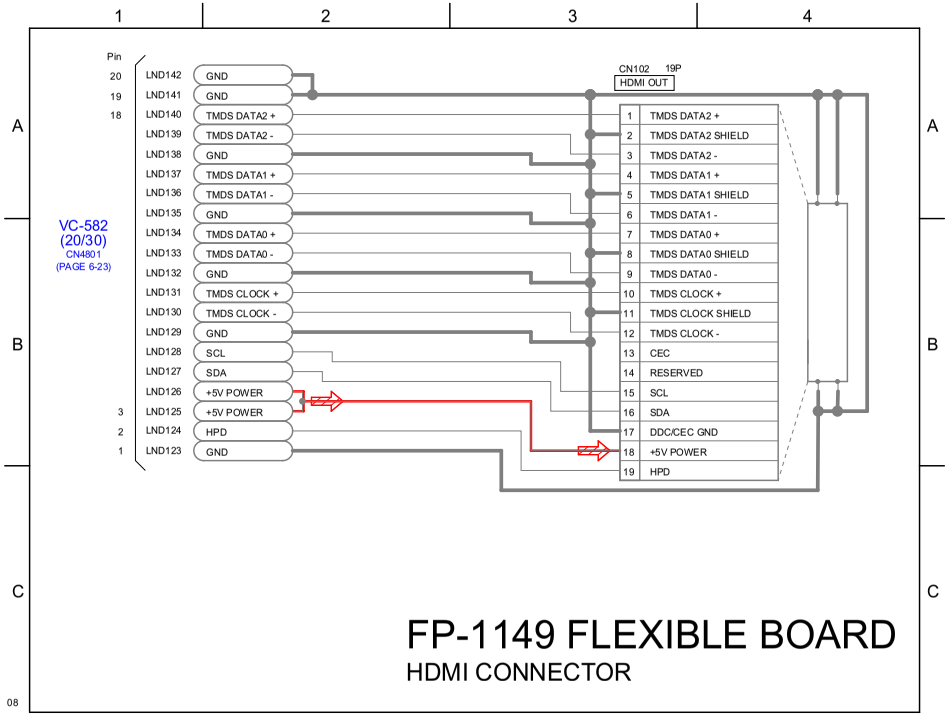

FP-1149 FLEXIBLE BOARD

HDMI CONNECTOR

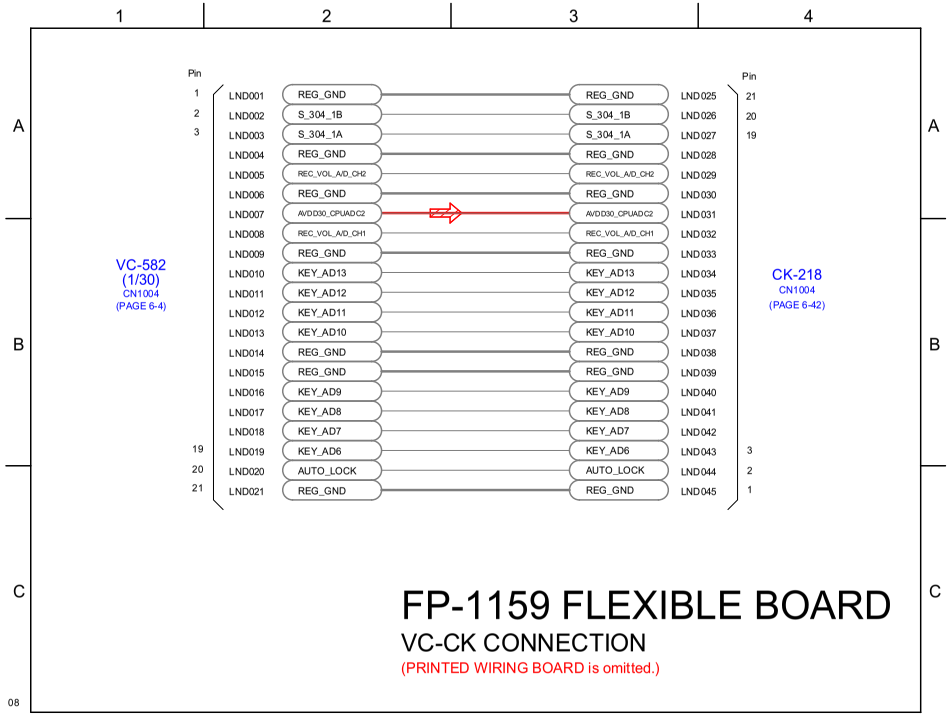

FP-1159 FLEXIBLE BOARD

VC-CK CONNECTION

(PRINTED WIRING BOARD is omitted.)

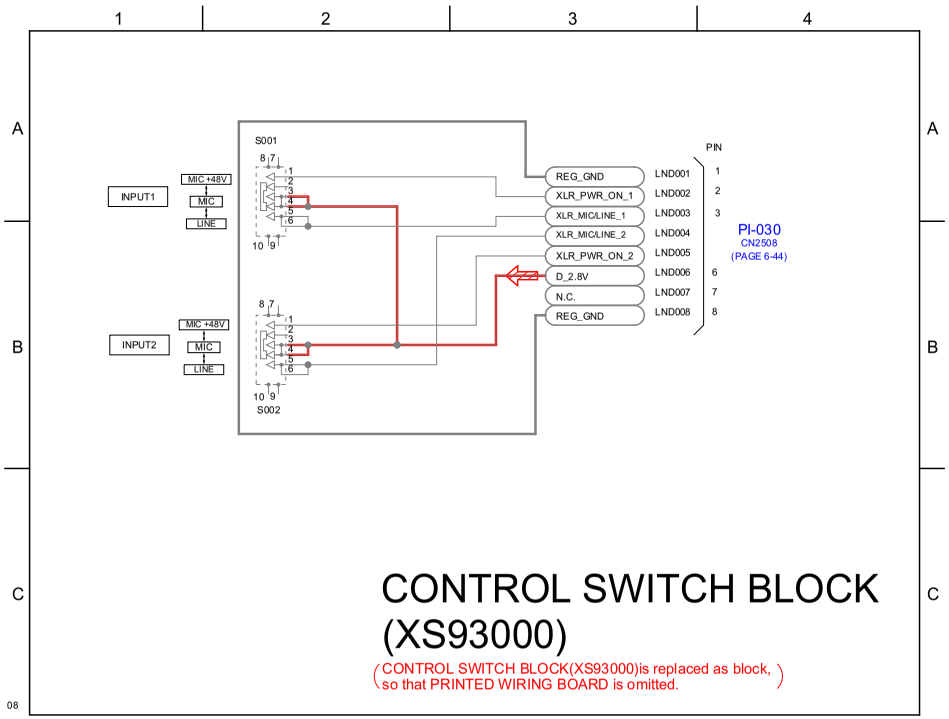

CONTROL SWITCH BLOCK (XS93000)

(CONTROL SWITCH BLOCK(XS93000)is replaced as block, so that PRINTED WIRING BOARD is omitted.)

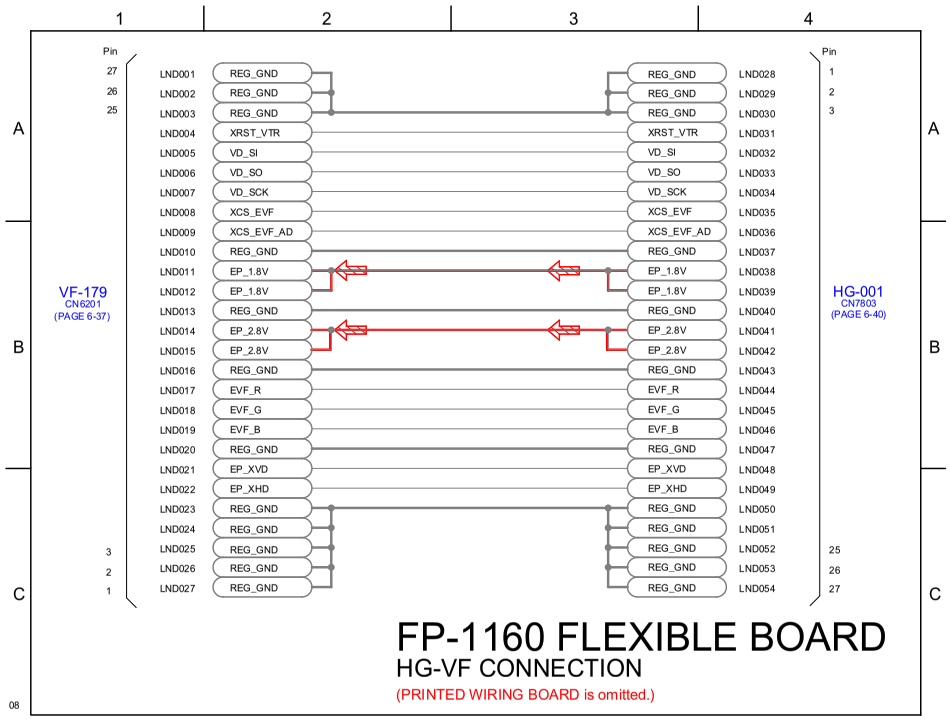

FP-1160 FLEXIBLE BOARD

HG-VF CONNECTION

(PRINTED WIRING BOARD is omitted.)

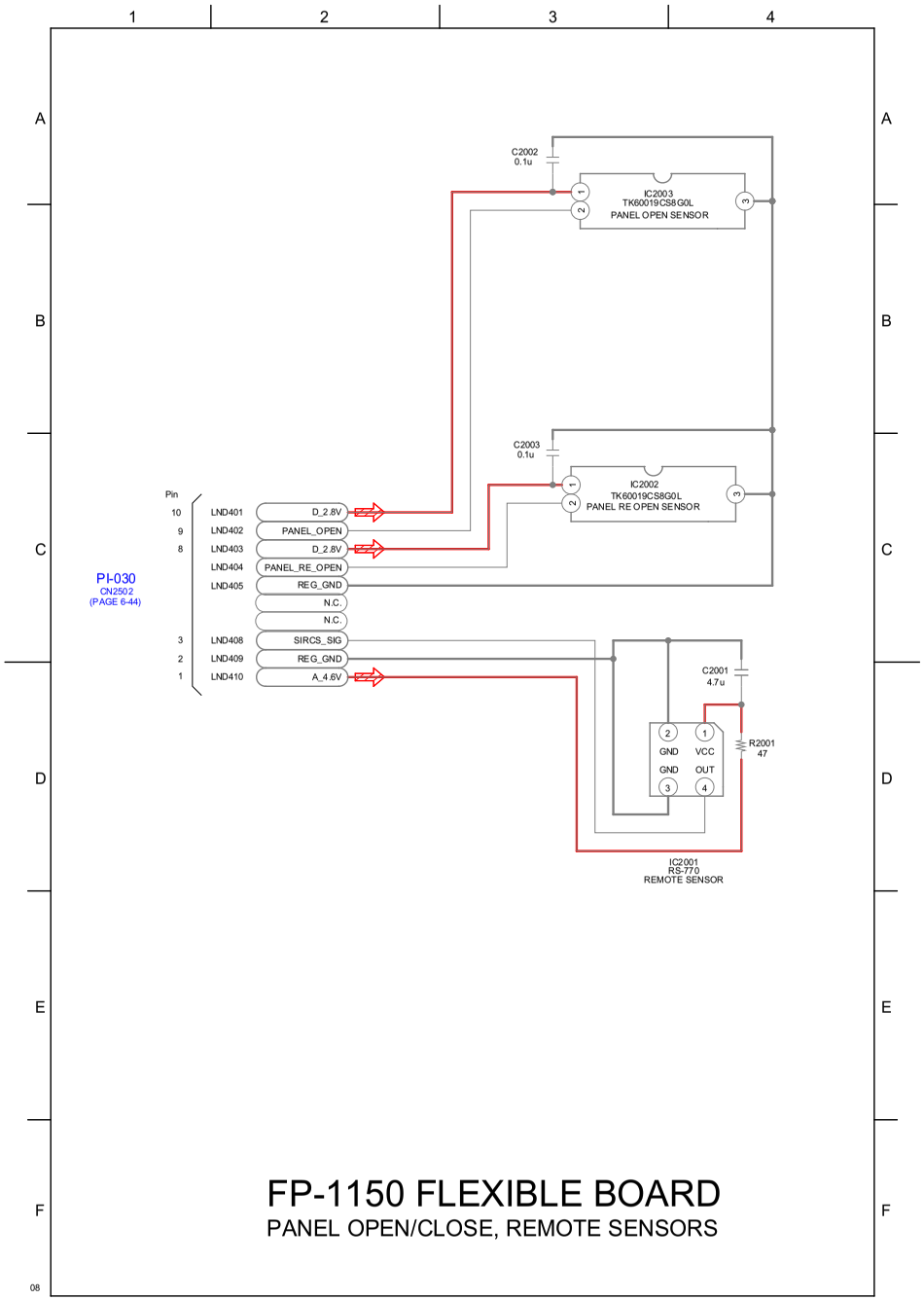

FP-1150 FLEXIBLE BOARD

PANEL OPEN/CLOSE, REMOTE SENSORS

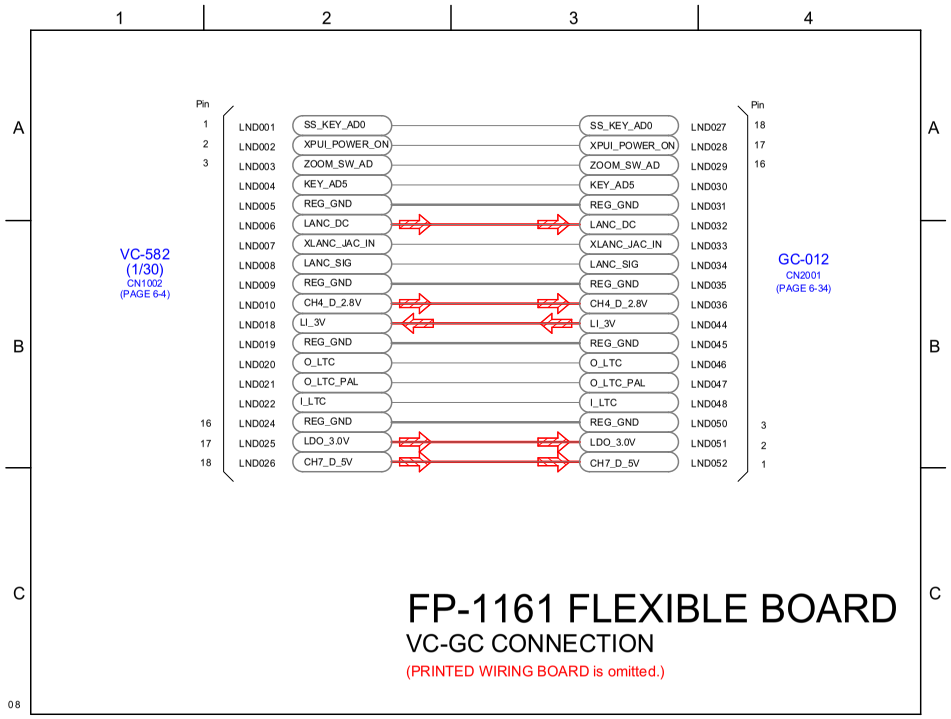

FP-1161 FLEXIBLE BOARD

VC-GC CONNECTION

(PRINTED WIRING BOARD is omitted.)

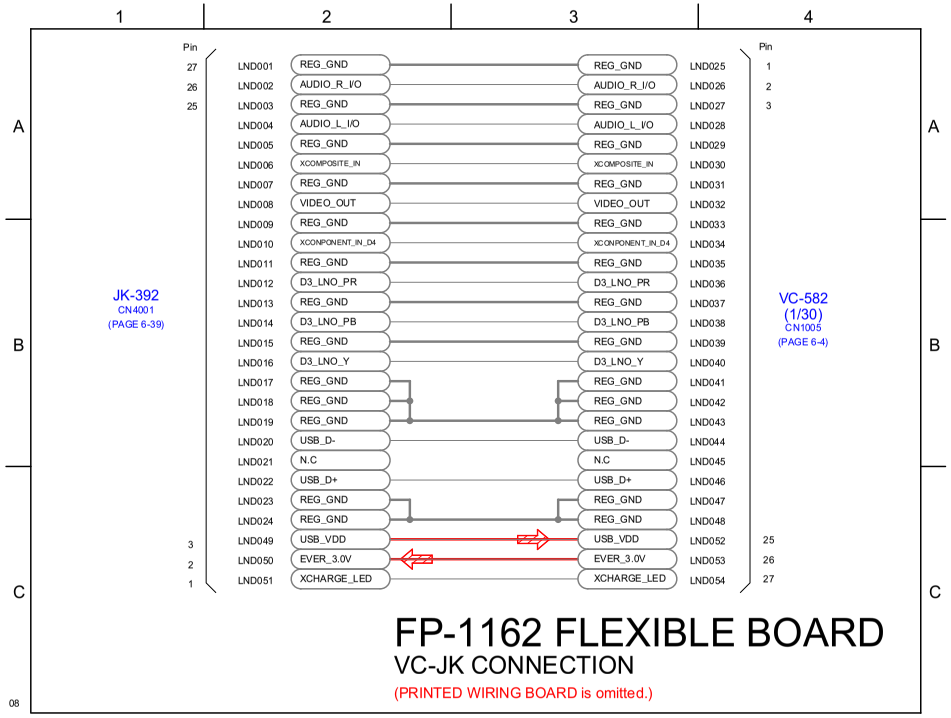

FP-1162 FLEXIBLE BOARD

VC-JK CONNECTION

(PRINTED WIRING BOARD is omitted.)

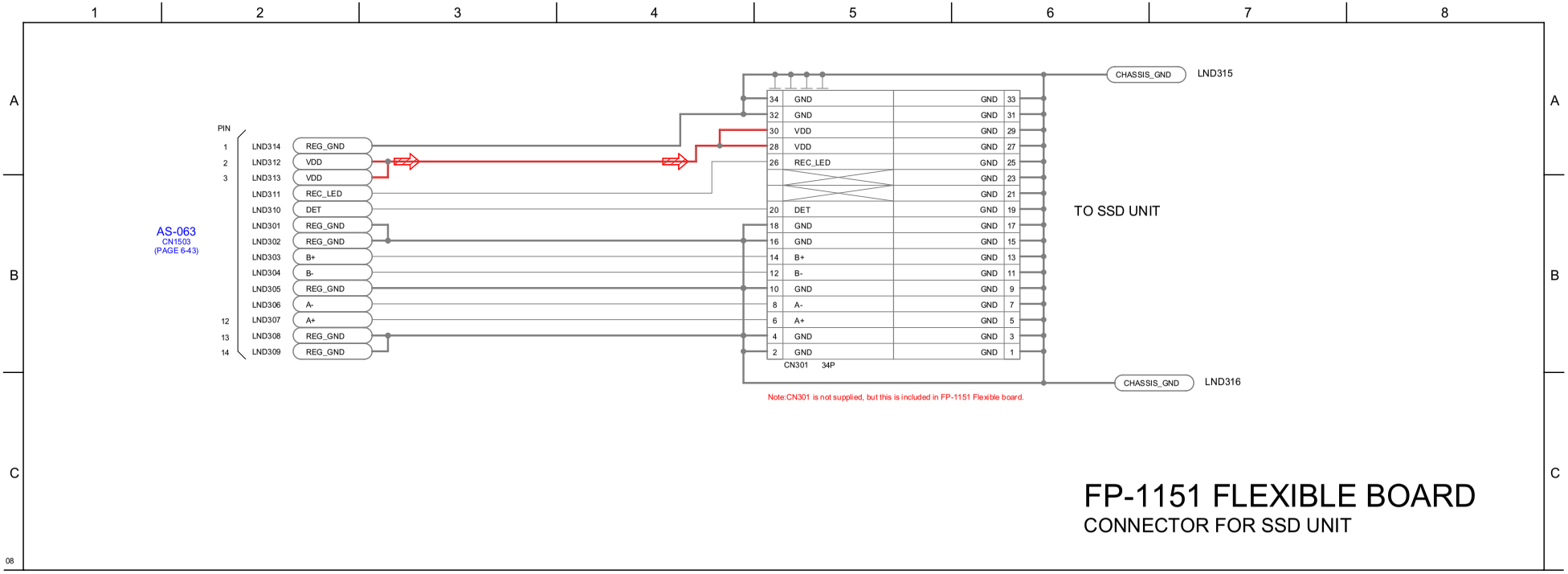

FP-1151 FLEXIBLE BOARD

CONNECTOR FOR SSD UNIT

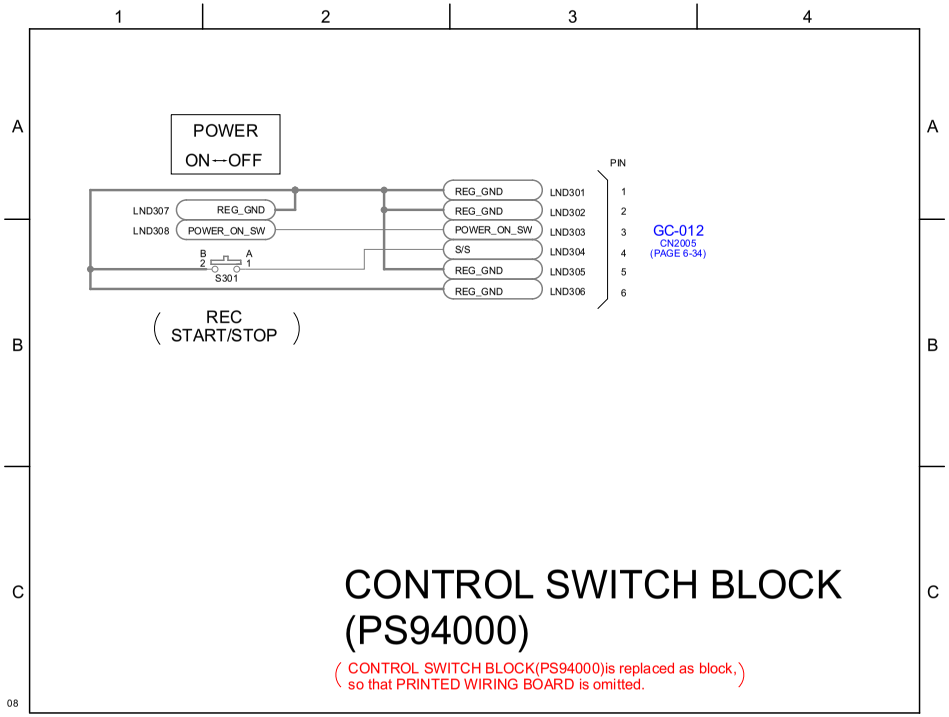

CONTROL SWITCH BLOCK (PS94000)

(CONTROL SWITCH BLOCK(PS94000)is replaced as block, so that PRINTED WIRING BOARD is omitted.)

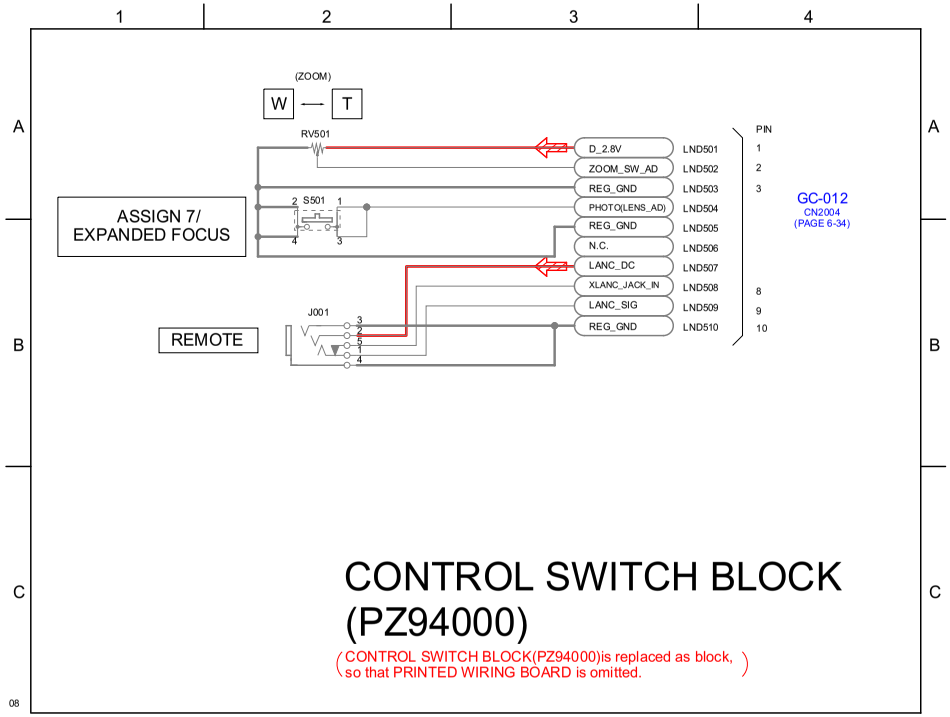

CONTROL SWITCH BLOCK (PZ94000)

(CONTROL SWITCH BLOCK(PZ94000)is replaced as block, so that PRINTED WIRING BOARD is omitted.)

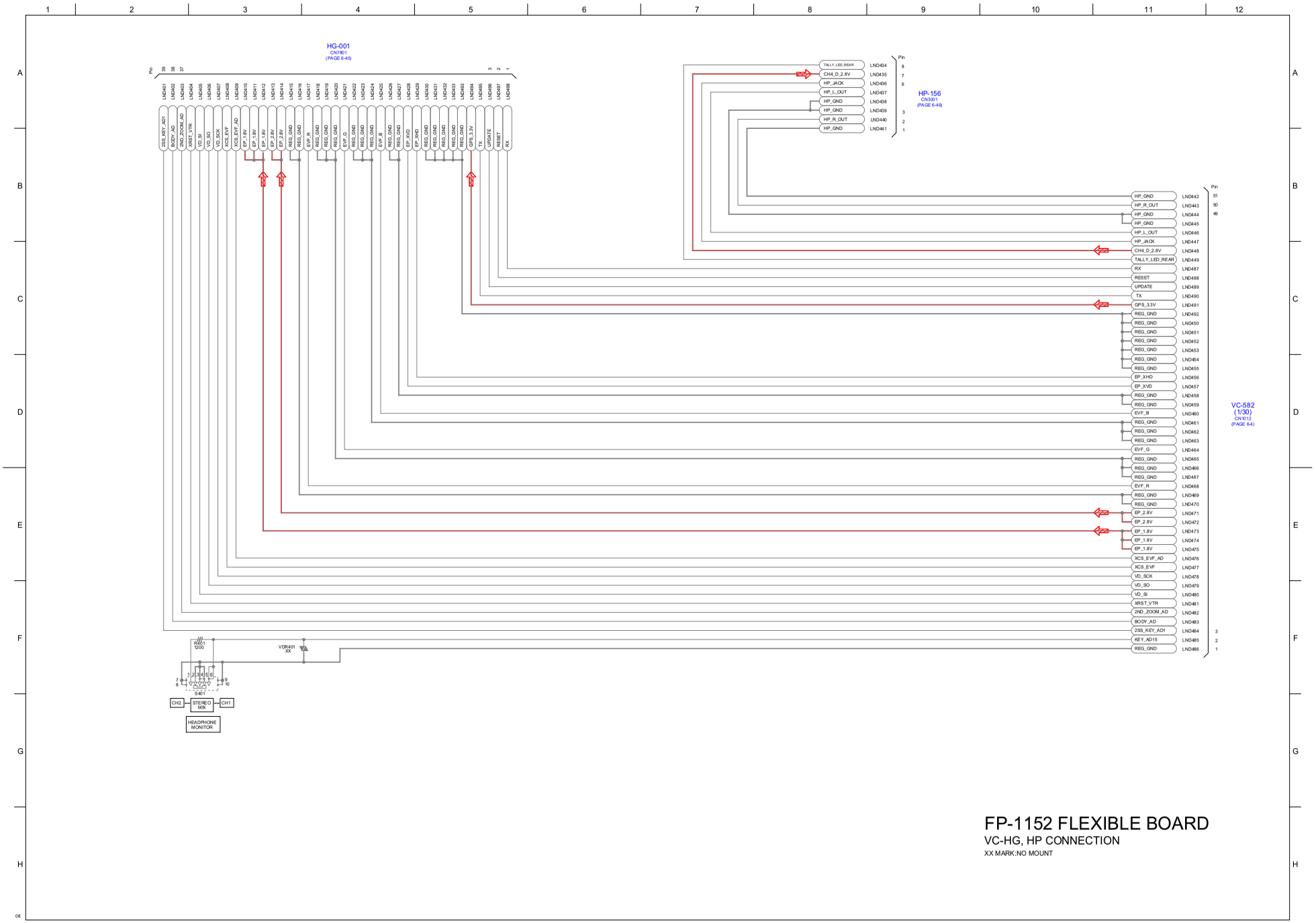

FP-1152 FLEXIBLE BOARD

VC-HG, HP CONNECTION

XX MARK:NO MOUNT

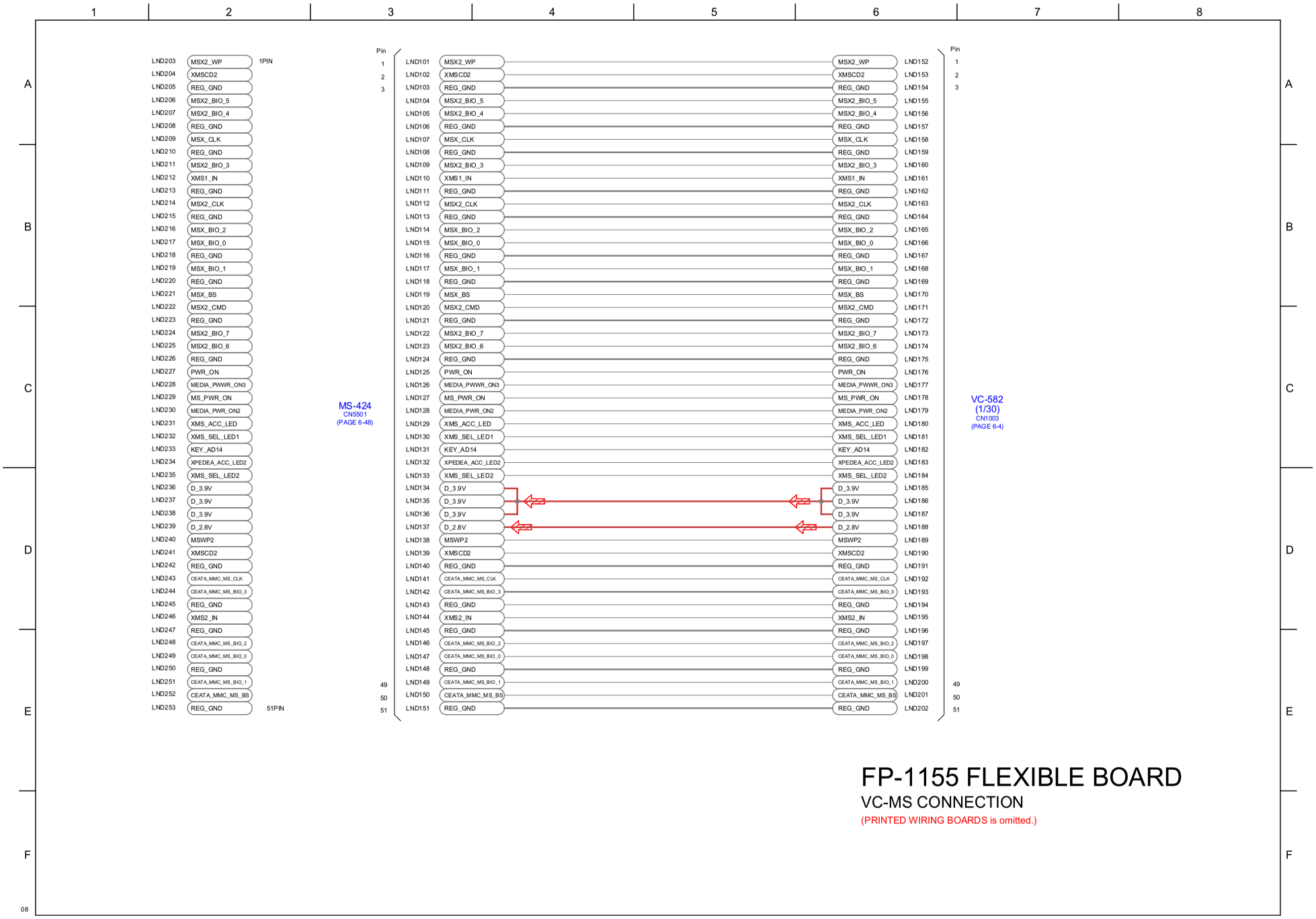

FP-1155 FLEXIBLE BOARD

VC-MS CONNECTION

(PRINTED WIRING BOARDS is omitted.)

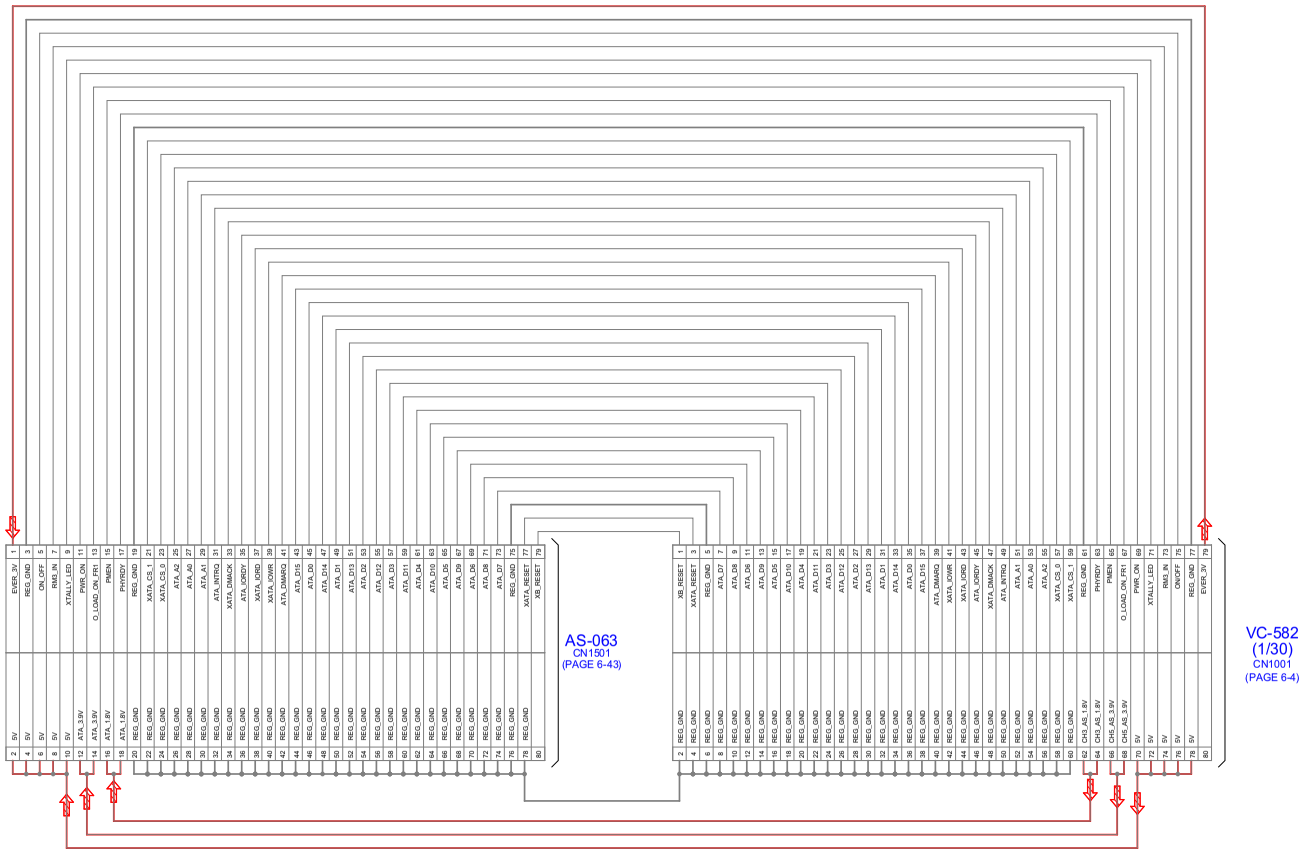

FP-1156 FLEXIBLE BOARD

VC-AS CONNECTION

(PRINTED WIRING BOARD is omitted.)

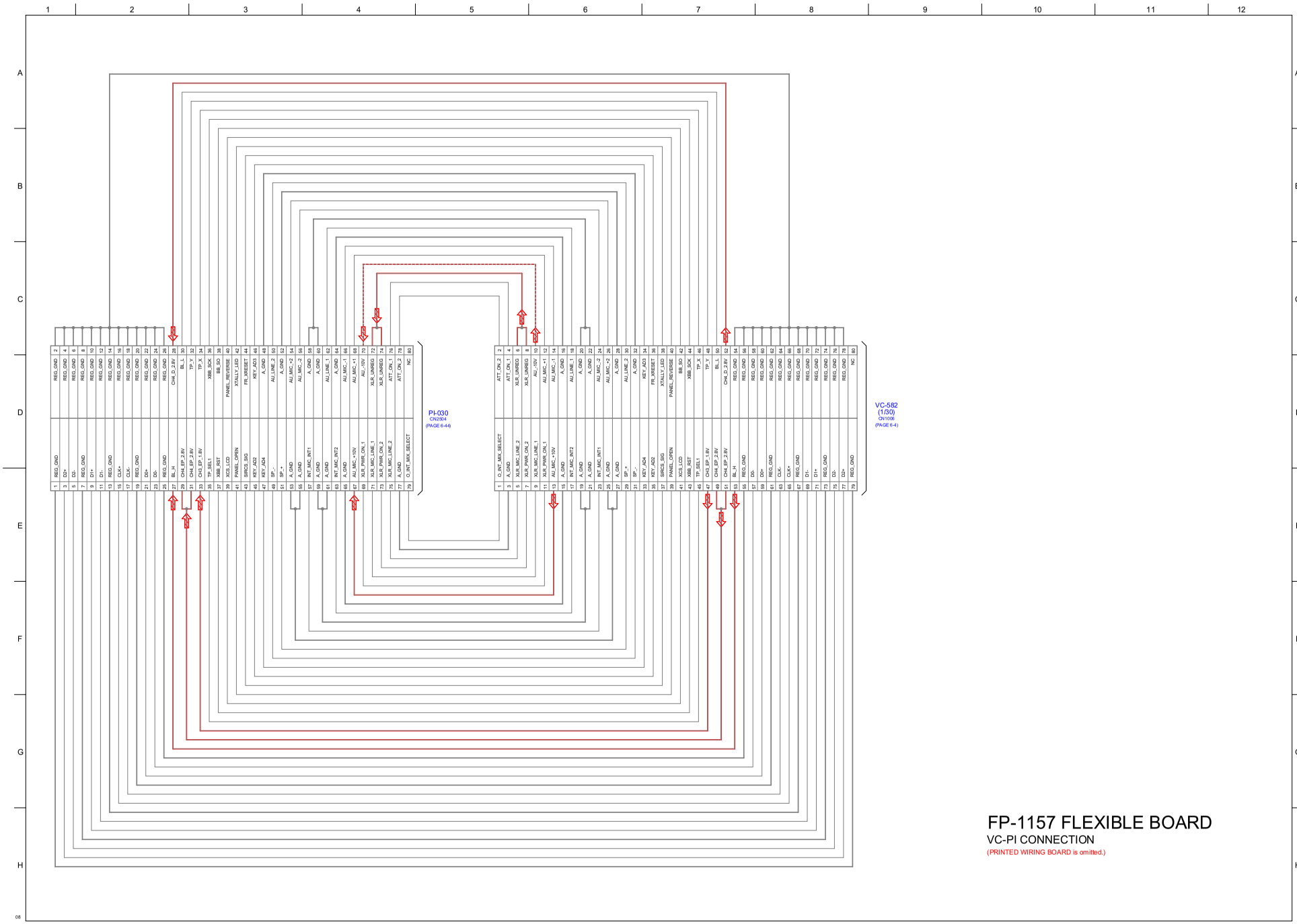

FP-1157 FLEXIBLE BOARD

VC-PI CONNECTION

(PRINTED WIRING BOARD is omitted.)

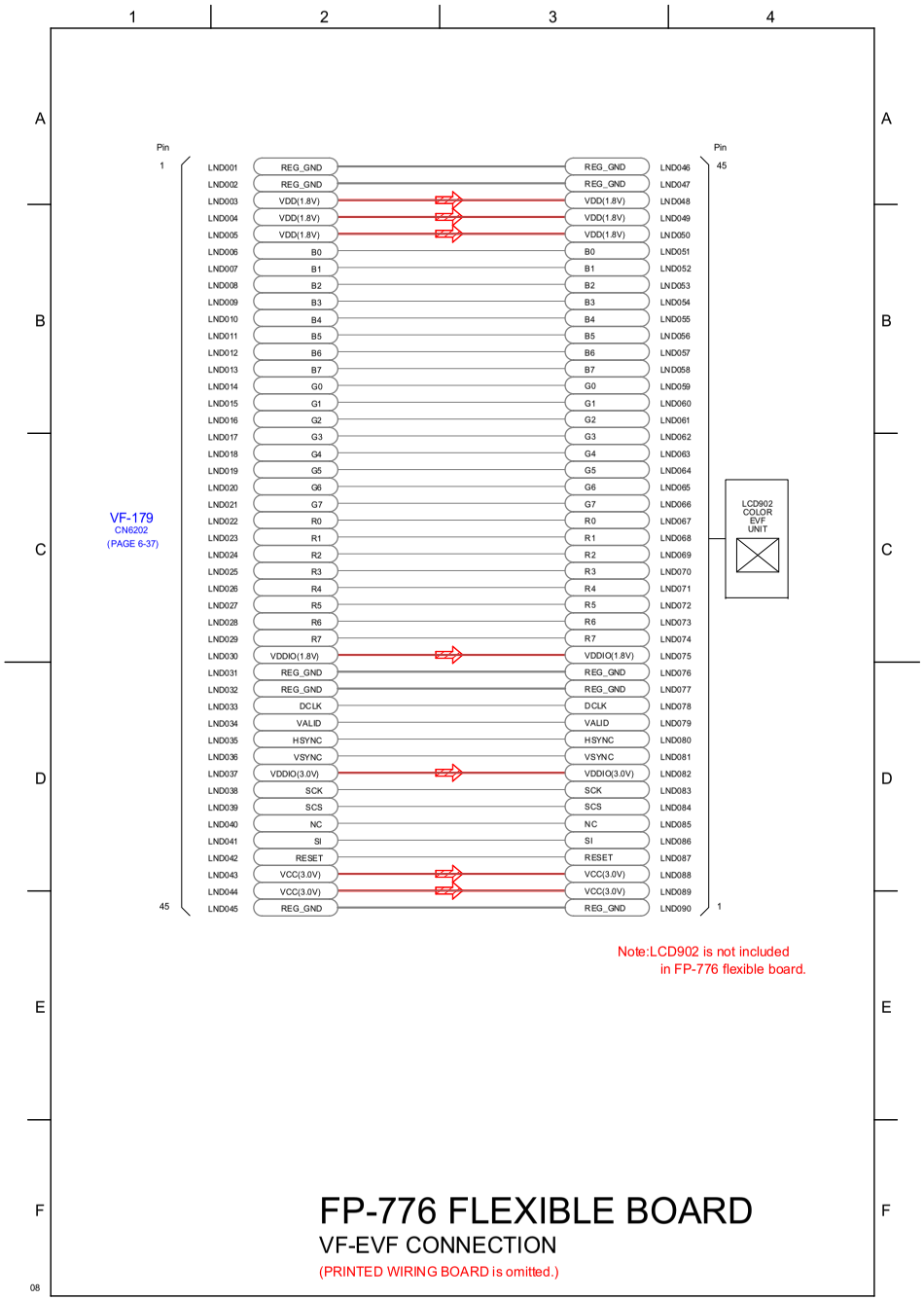
VF-179
CN6202
(PAGE 6-37)
Pin
1
45
LND001 REG_GND
LND002 REG_GND
LND003 VDD(1.8V)
LND004 VDD(1.8V)
LND005 VDD(1.8V)
LND006 B0
LND007 B1
LND008 B2
LND009 B3
LND010 B4
LND011 B5
LND012 B6
LND013 B7
LND014 G0
LND015 G1
LND016 G2
LND017 G3
LND018 G4
LND019 G5
LND020 G6
LND021 G7
LND022 R0
LND023 R1
LND024 R2
LND025 R3
LND026 R4
LND027 R5
LND028 R6
LND029 R7
LND030 VDDIO(1.8V)
LND031 REG_GND
LND032 REG_GND
LND033 DCLK
LND034 VALID
LND035 HSYNC
LND036 VSYNC
LND037 VDDIO(3.0V)
LND038 SCK
LND039 SCS
LND040 NC
LND041 SI
LND042 RESET
LND043 VCC(3.0V)
LND044 VCC(3.0V)
LND045 REG_GND
REG_GND LND046
REG_GND LND047
VDD(1.8V) LND048
VDD(1.8V) LND049
VDD(1.8V) LND050
B0 LND051
B1 LND052
B2 LND053
B3 LND054
B4 LND055
B5 LND056
B6 LND057
B7 LND058
G0 LND059
G1 LND060
G2 LND061
G3 LND062
G4 LND063
G5 LND064
G6 LND065
G7 LND066
R0 LND067
R1 LND068
R2 LND069
R3 LND070
R4 LND071
R5 LND072
R6 LND073
R7 LND074
VDDIO(1.8V) LND075
REG_GND LND076
REG_GND LND077
DCLK LND078
VALID LND079
HSYNC LND080
VSYNC LND081
VDDIO(3.0V) LND082
SCK LND083
SCS LND084
NC LND085
SI LND086
RESET LND087
VCC(3.0V) LND088
VCC(3.0V) LND089
REG_GND LND090
LCD902
COLOR
EVF
UNIT
Note:LCD902 is not included
in FP-776 flexible board.
FP-776 FLEXIBLE BOARD
VF-EVF CONNECTION
(PRINTED WIRING BOARD is omitted.)
08

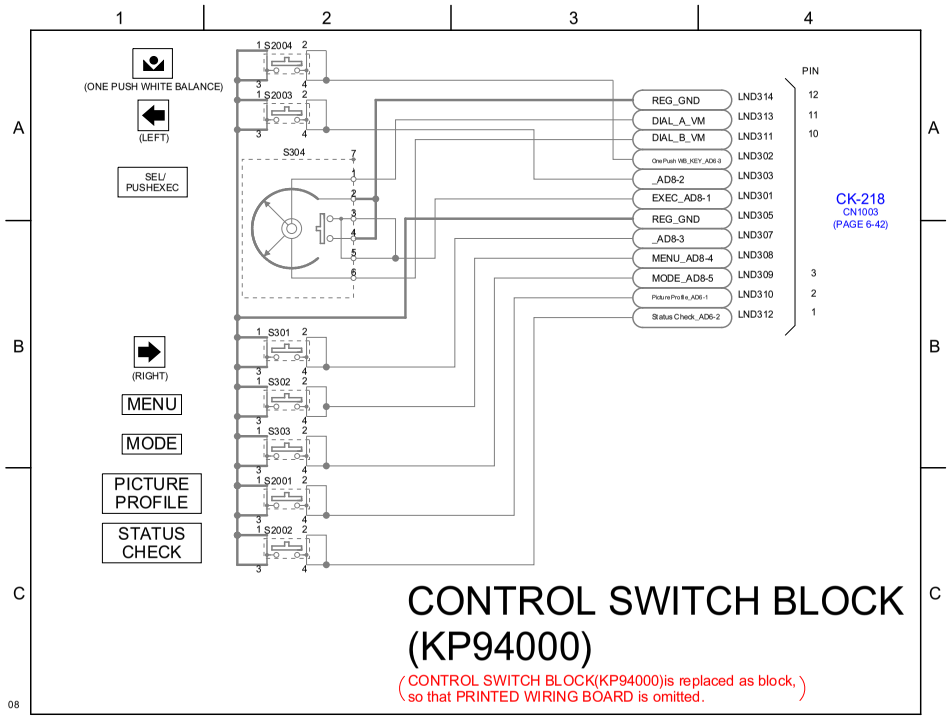
(ONE PUSH WHITE BALANCE)
(LEFT)
SEL/
PUSHEXEC
(RIGHT)
MENU
MODE
PICTURE
PROFILE
STATUS
CHECK
S2004
S2003
S304
S301
S302
S303
S2001
S2002
REG_GND LND314
DIAL_A_VM LND313
DIAL_B_VM LND311
One Push WB_KEY_AD8-3 LND302
_AD8-2 LND303
EXEC_AD8-1 LND301
REG_GND LND305
_AD8-3 LND307
MENU_AD8-4 LND308
MODE_AD8-5 LND309
Picture Profile_AD8-1 LND310
Status Check_AD6-2 LND312
PIN
CK-218
CN1003
(PAGE 6-42)
CONTROL SWITCH BLOCK
(KP94000)
(CONTROL SWITCH BLOCK(KP94000)is replaced as block,
so that PRINTED WIRING BOARD is omitted.)
08

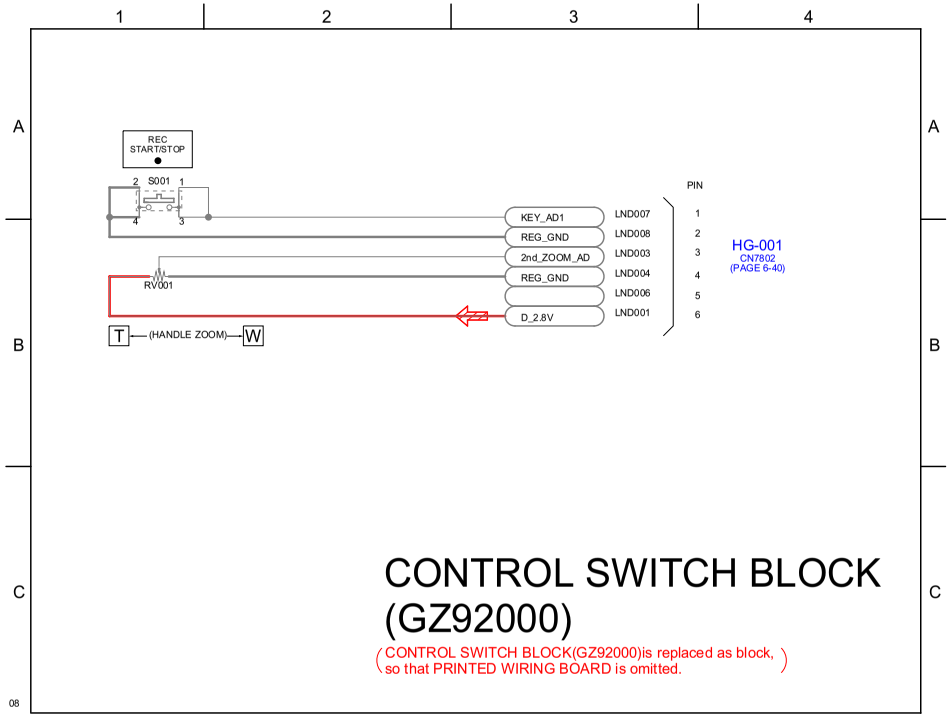
REC
START/STOP
S001
RV001
T
(HANDLE ZOOM)
W
KEY_AD1 LND007
REG_GND LND008
2nd_ZOOM_AD LND003
REG_GND LND004
LND006
D_2.8V LND001
PIN
HG-001
CN7802
(PAGE 6-40)
CONTROL SWITCH BLOCK
(GZ92000)
(CONTROL SWITCH BLOCK(GZ92000)is replaced as block,
so that PRINTED WIRING BOARD is omitted.)
08

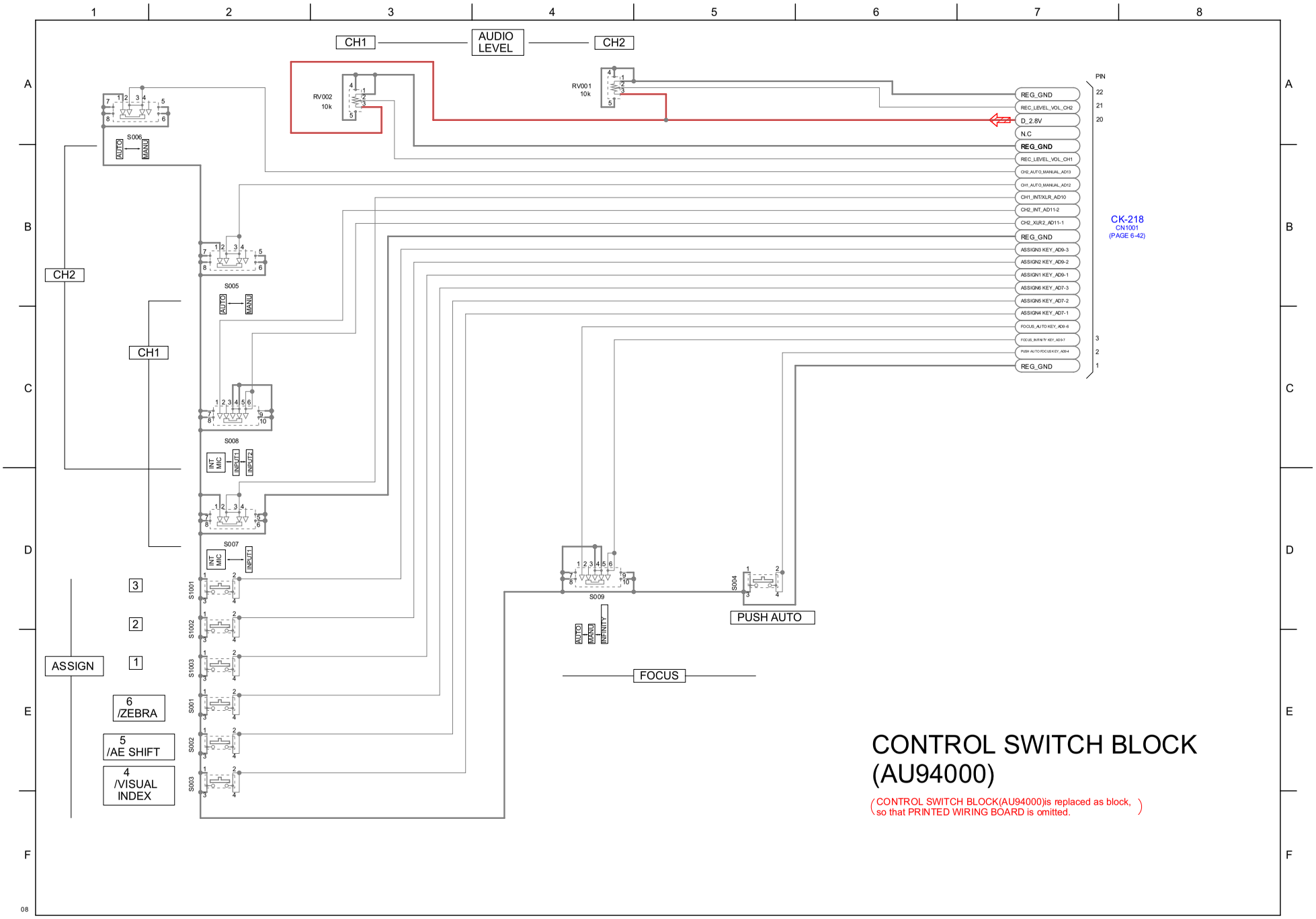
CH1
AUDIO LEVEL
CH2
RV002 10k
RV001 10k
S006
AUTO
MANU
S005
S008
INT MIC
INPUT1
INPUT2
S007
CH2
CH1
ASSIGN
3
2
1
6 /ZEBRA
5 /AE SHIFT
4 /VISUAL INDEX
S1001
S1002
S1003
S001
S002
S003
S009
INFINITY
FOCUS
S004
PUSH AUTO
PIN
REG_GND
REC_LEVEL_VOL_CH2
D_2.8V
N.C
REG_GND
REC_LEVEL_VOL_CH1
CH2_AUTO_MANUAL_AD13
CH1_AUTO_MANUAL_AD12
CH1_INT/XLR_AD10
CH2_INT_AD11-2
CH2_XLR2_AD11-1
REG_GND
ASSIGN3 KEY_AD9-3
ASSIGN2 KEY_AD9-2
ASSIGN1 KEY_AD9-1
ASSIGN6 KEY_AD7-3
ASSIGN5 KEY_AD7-2
ASSIGN4 KEY_AD7-1
FOCUS_AUTO KEY_AD9-6
FOCUS_INFINITY KEY_AD9-7
PUSH AUTO FOCUS KEY_AD9-4
REG_GND
CK-218
CN1001
(PAGE 6-42)
CONTROL SWITCH BLOCK
(AU94000)
(CONTROL SWITCH BLOCK(AU94000)is replaced as block, so that PRINTED WIRING BOARD is omitted.)
08

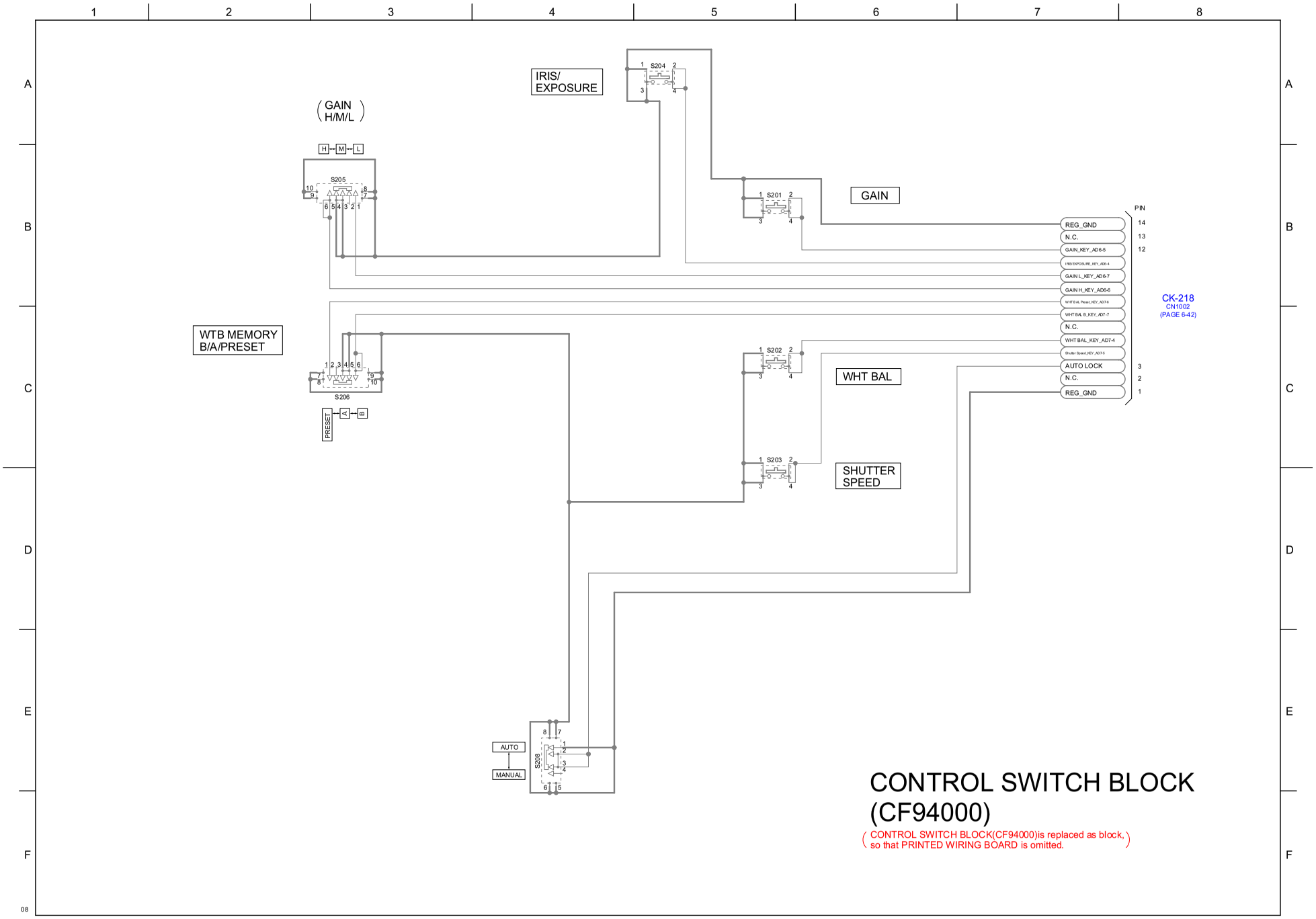
IRIS/
EXPOSURE
S204
GAIN
H/M/L
H
M
L
S205
S201
GAIN
PIN
REG_GND
N.C.
GAIN_KEY_AD6-5
IRIS/EXPOSURE_KEY_AD6-4
GAIN L_KEY_AD6-7
GAIN H_KEY_AD6-6
WHT BAL Preset_KEY_AD7-6
WHT BAL B_KEY_AD7-7
N.C.
WHT BAL_KEY_AD7-4
Shutter Speed_KEY_AD7-5
AUTO LOCK
N.C.
REG_GND
14
13
12
3
2
1
CK-218
CN1002
(PAGE 6-42)
WTB MEMORY
B/A/PRESET
S206
PRESET
S202
WHT BAL
S203
SHUTTER
SPEED
AUTO
MANUAL
S208
CONTROL SWITCH BLOCK
(CF94000)
(CONTROL SWITCH BLOCK(CF94000)is replaced as block,
so that PRINTED WIRING BOARD is omitted.)

CM-097 BOARD (SIDE A)

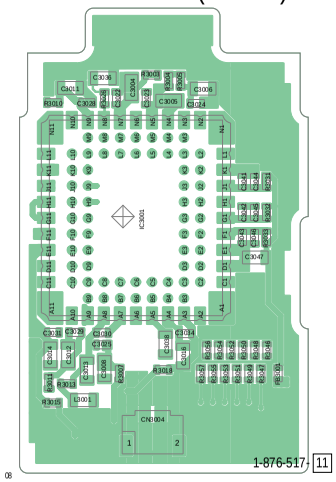

CM-097 BOARD (SIDE B)

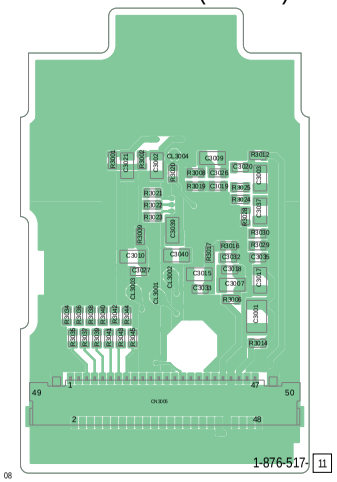

Note: In red and blue, the same CM-097 board is used respective.
Note: CM-097 complete board and all mounted parts (including IC3001(CMOS IMAGER)) are not supplied, but they are included in PRISM DEVICE(service).

CM-104 BOARD (SIDE A)

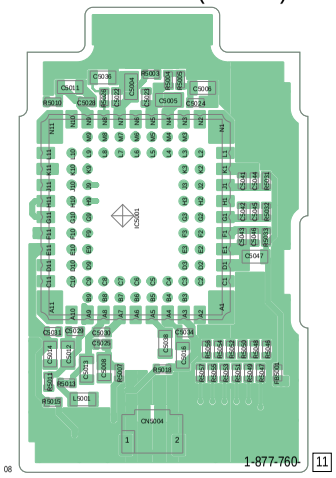

CM-104 BOARD (SIDE B)

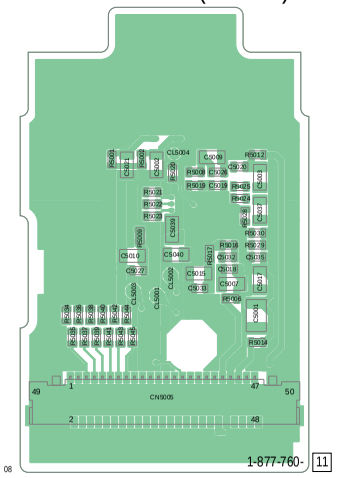

Note: CM-104 complete board and all mounted parts(including IC5001(CMOS IMAGER)) are not supplied, but they are included in PRISM DEVICE(service).

: Uses unleaded solder.

VC-582 BOARD (SIDE A)

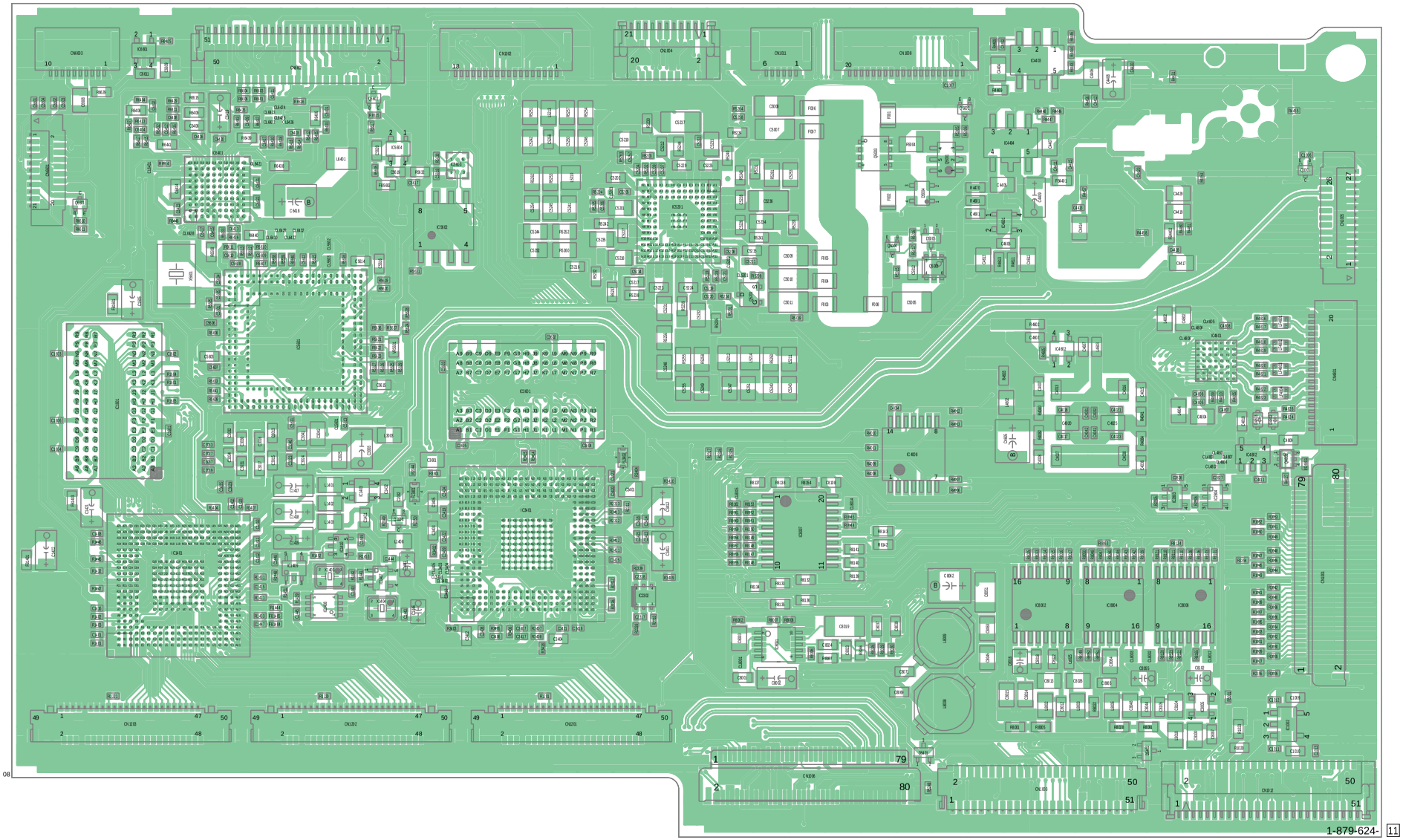

: Uses unleaded solder.

VC-582 BOARD (SIDE B)

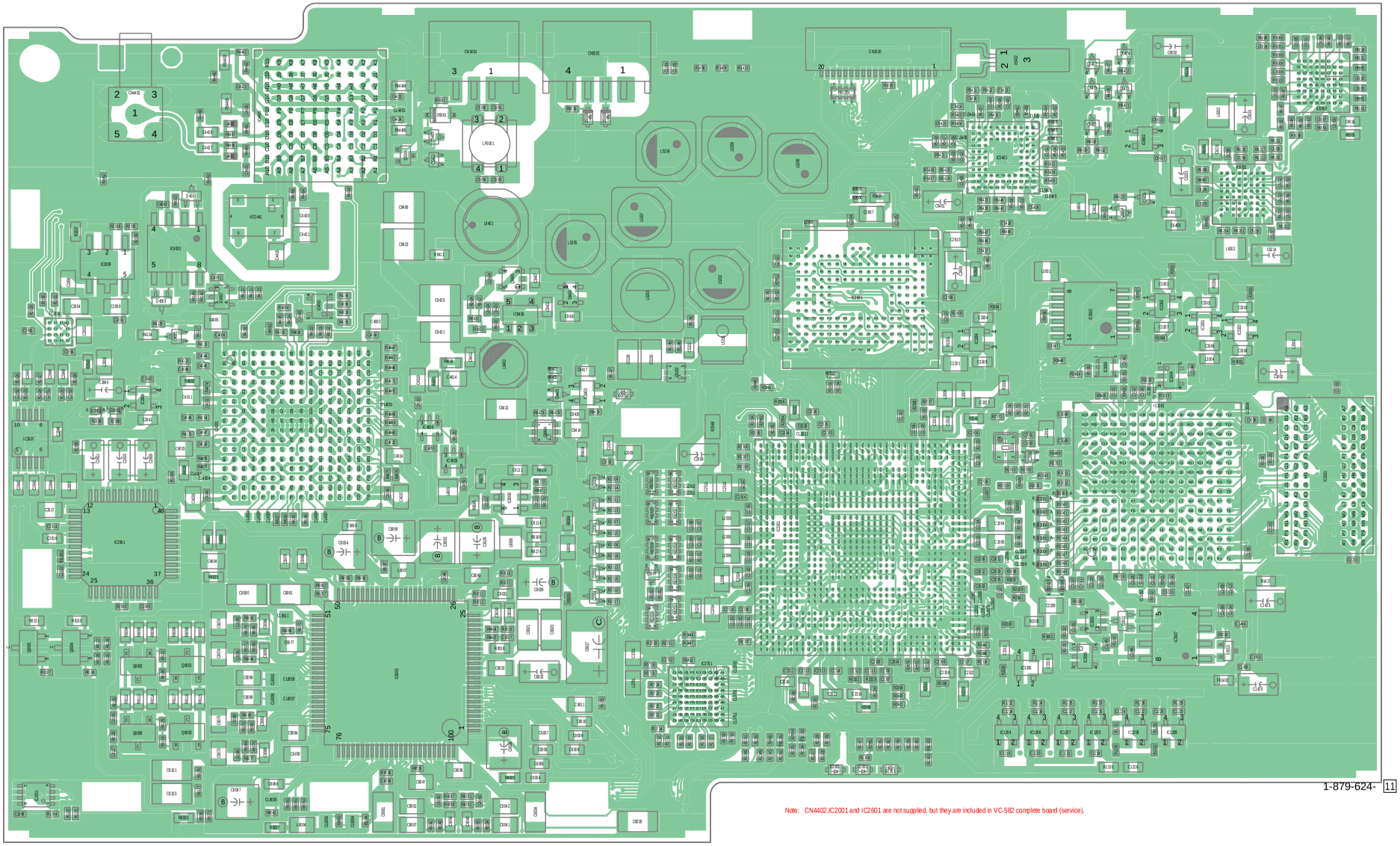

1-879-624- 11

Note: CN4402,IC2001 and IC2601 are not supplied, but they are included in VC-582 complete board (service).

08

: Uses unleaded solder.

GC-012 BOARD (SIDE A)

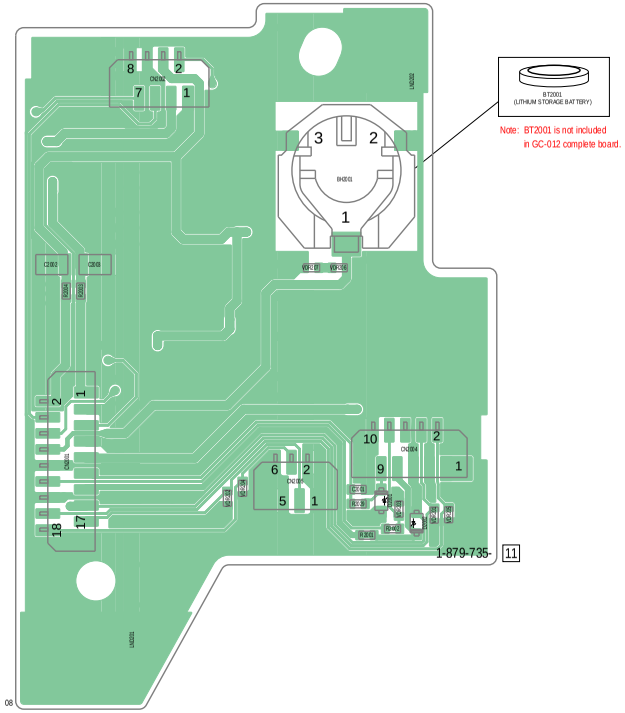

GC-012 BOARD (SIDE B)

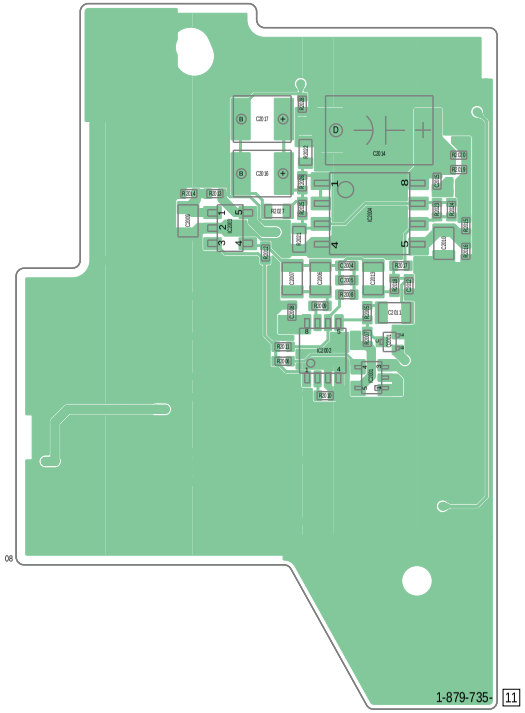

TC-001 BOARD (SIDE A)

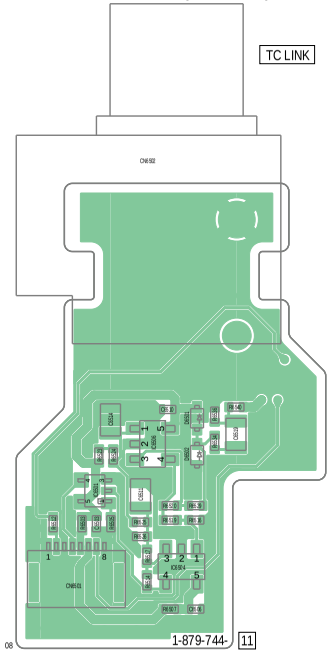

TC-001 BOARD (SIDE B)

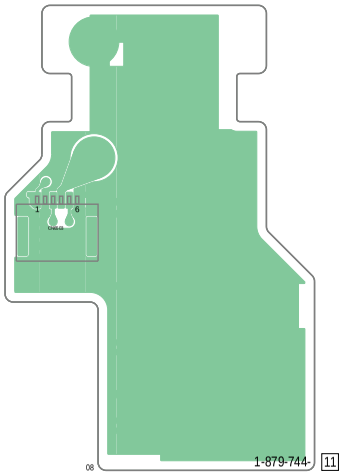

Caution :
Danger of explosion if battery is incorrectly replaced.
Replace only with the same or equivalent type.
Dispose of used batteries according to the instructions.

注意 :
電池の交換は，正しく行わないと破裂する恐れがあります。
電池を交換する場合には必ず同じ型名の電池又は同等品と交換してください。
使用済み電池は，取扱指示に従って処分してください。

Note: Replace the battery holder (BH2001) together when replacing the lithium storage battery (BT2001) on the GC-012 board. (The battery holder removed once cannot be used again.)
When mounting these parts, mount new battery holder first and attach new lithium storage battery next.

ノート:
GC- 基板のリチウム蓄電池（B ）を交換する場合はバッテリホルダ(B)も同時に新品に交換して下さい。
(一度使用したバッテリホルダは再使用できません。)
部品取り付けの際は，先にバッテリホルダを取り付けてからリチウム蓄電池を装着して下さい。

VF-179 BOARD (SIDE A)

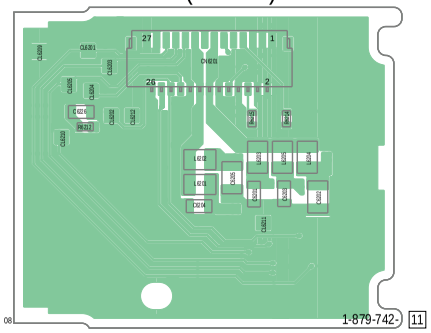

VF-179 BOARD (SIDE B)

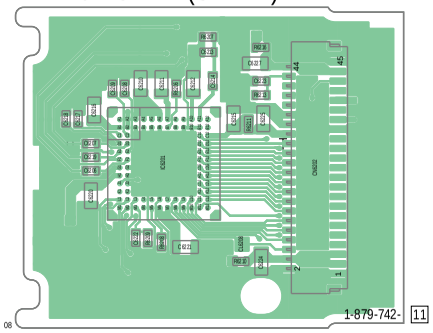

GY-022 BOARD (SIDE A)

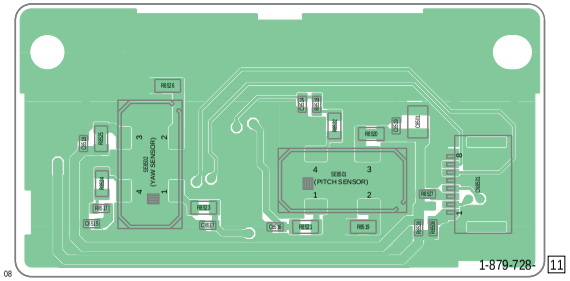

GY-022 BOARD (SIDE B)

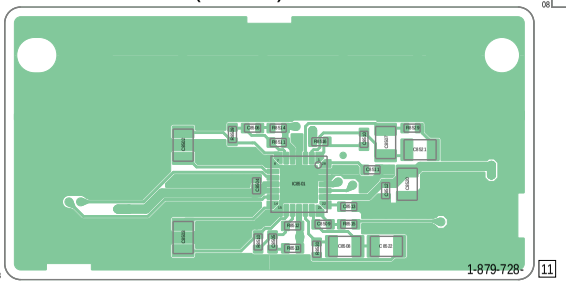

: Uses unleaded solder.

CP-004 BOARD (SIDE A)

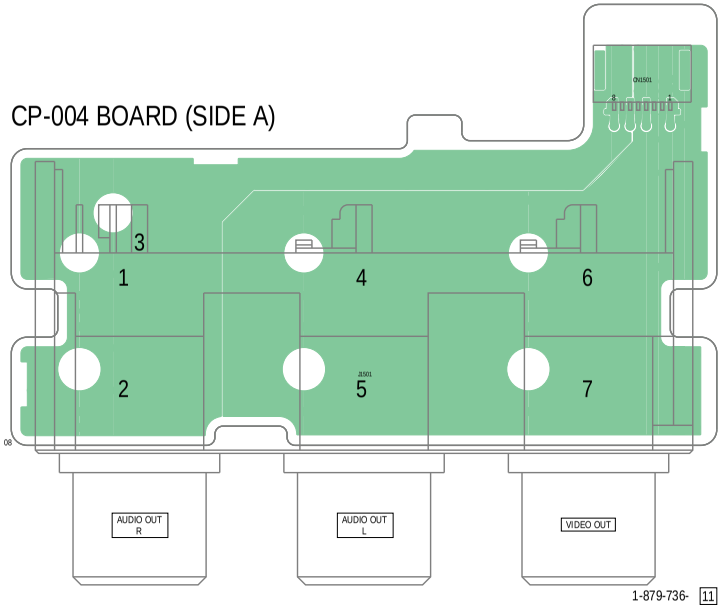

CP-004 BOARD (SIDE B)

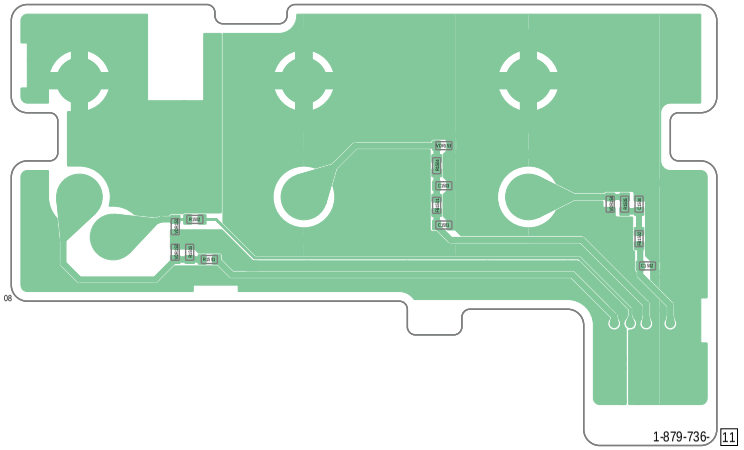

MA-459 BOARD (SIDE A)

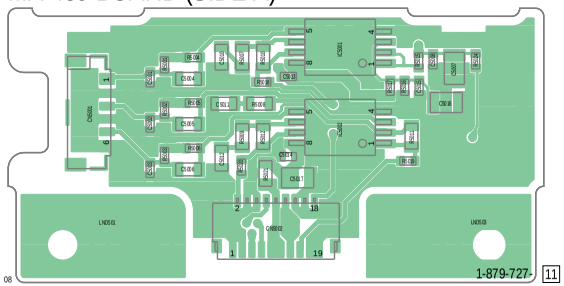

MA-459 BOARD (SIDE B)

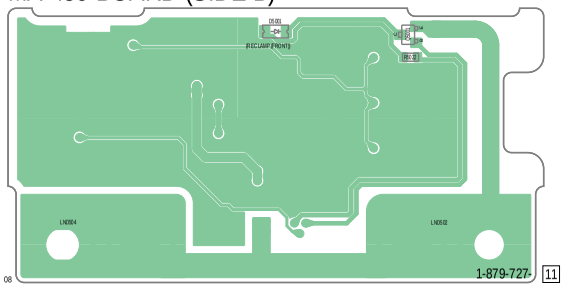

HG-001 BOARD (SIDE A)

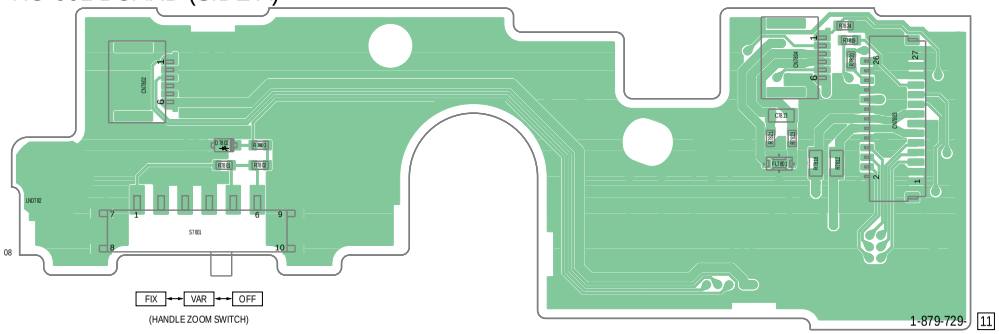

HG-001 BOARD (SIDE B)

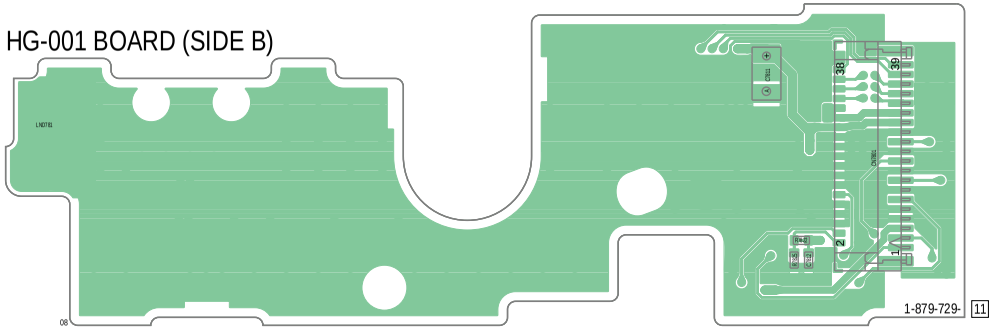

HT-003 BOARD (SIDE A)

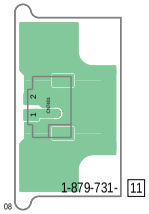

HT-003 BOARD (SIDE B)

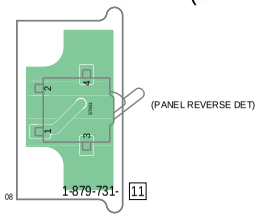

: Uses unleaded solder.

CK-218 BOARD (SIDE A)

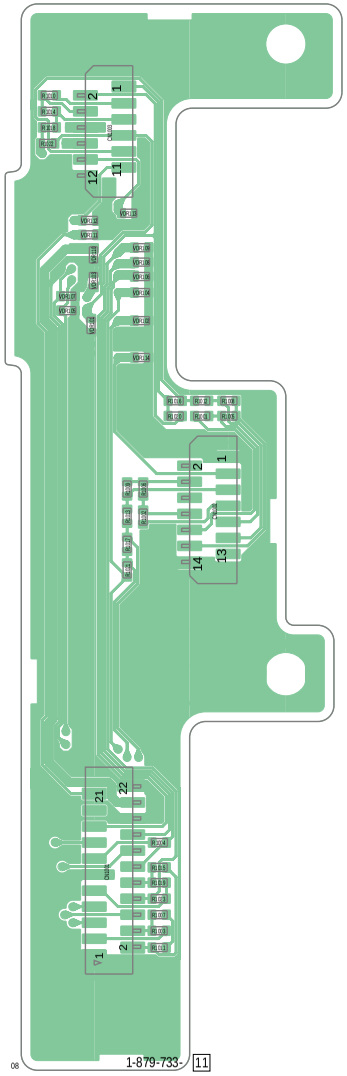

CK-218 BOARD (SIDE B)

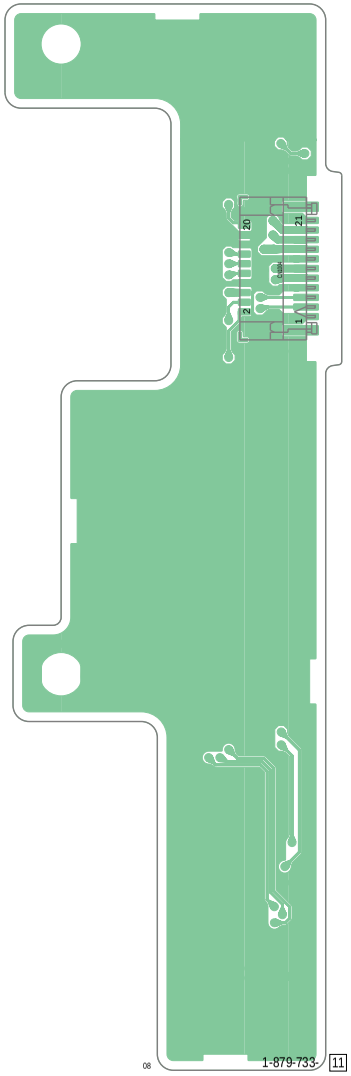

AS-063 BOARD (SIDE A)

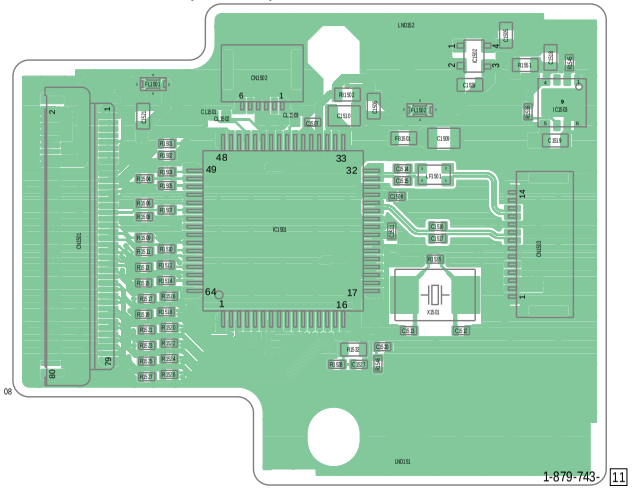

AS-063 BOARD (SIDE B)

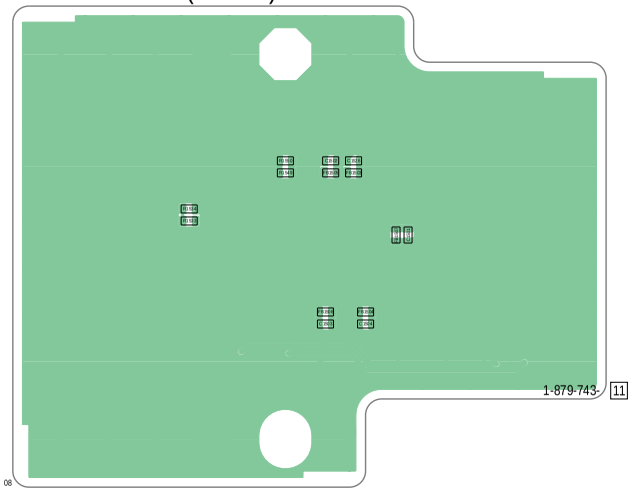

HP-156 BOARD (SIDE A)

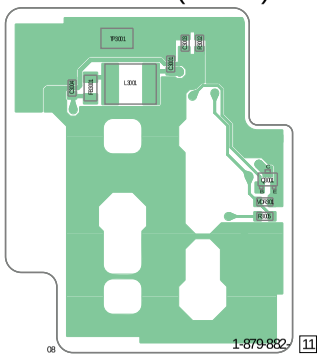

HP-156 BOARD (SIDE B)

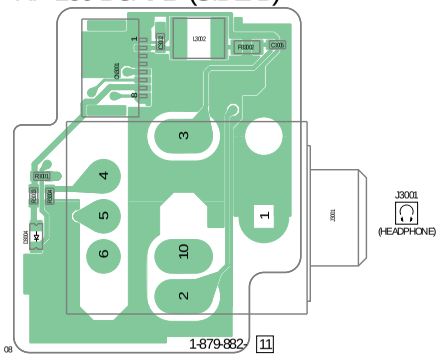

TS-157 BOARD

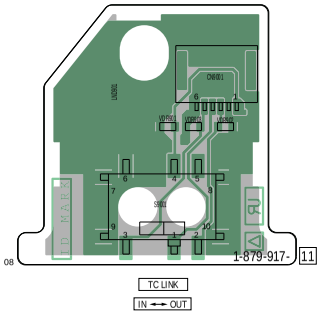

: Uses unleaded solder.

PI-030 BOARD (SIDE A)

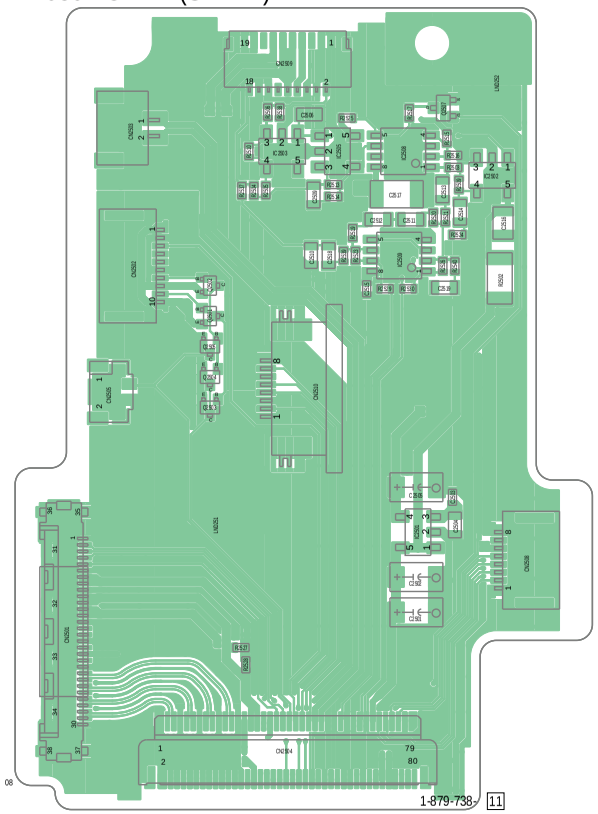

PI-030 BOARD (SIDE B)

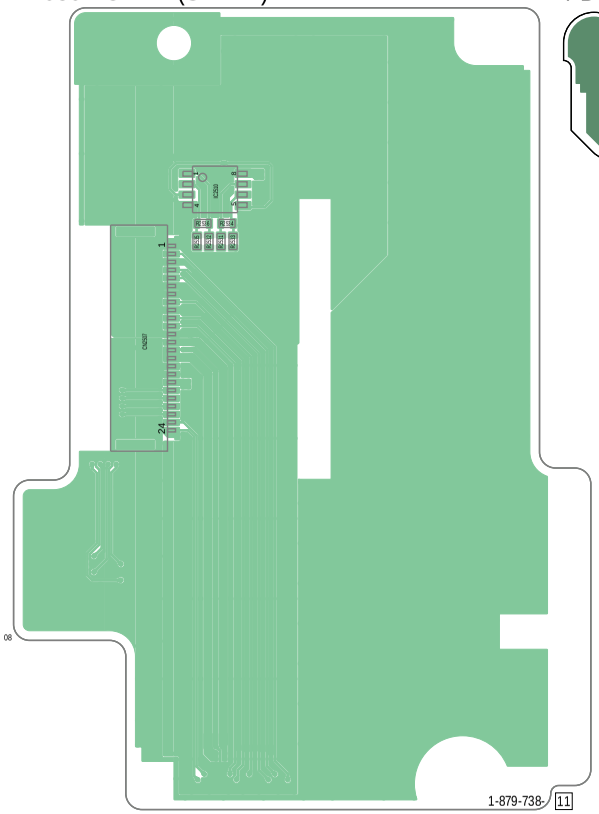

PD-395 BOARD

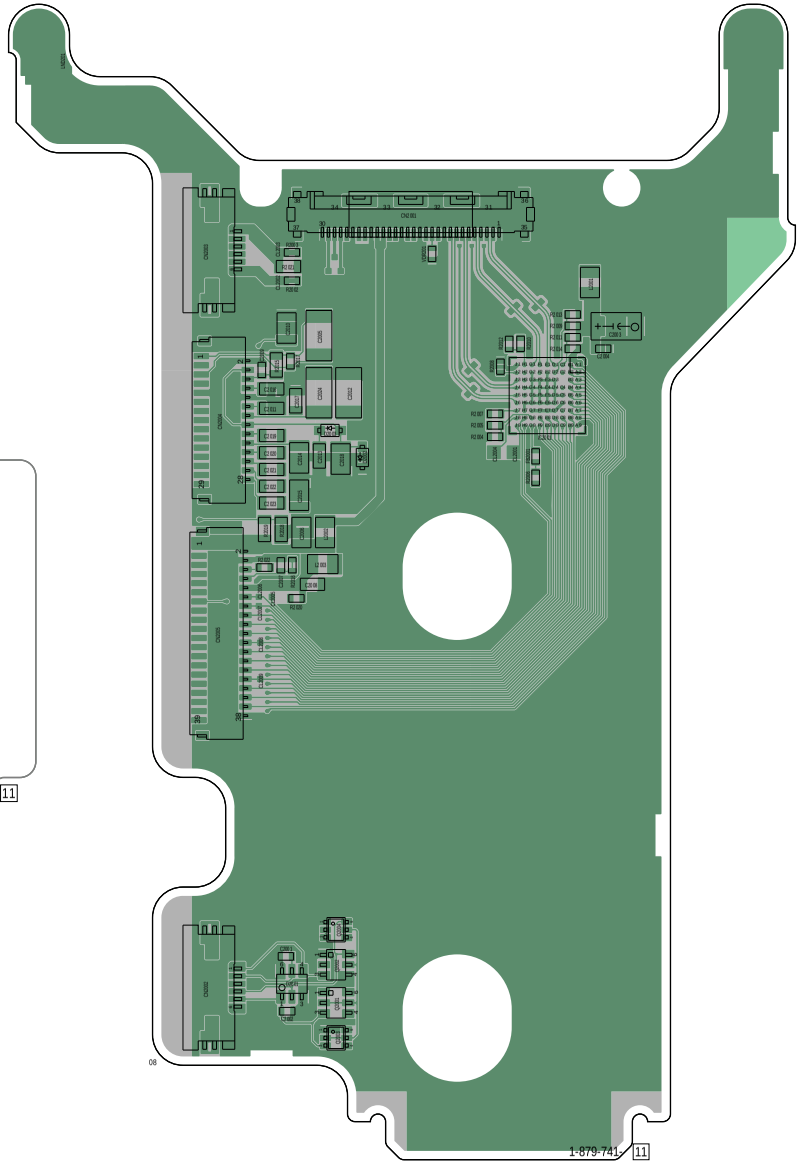

FP-1151 FLEXIBLE BOARD

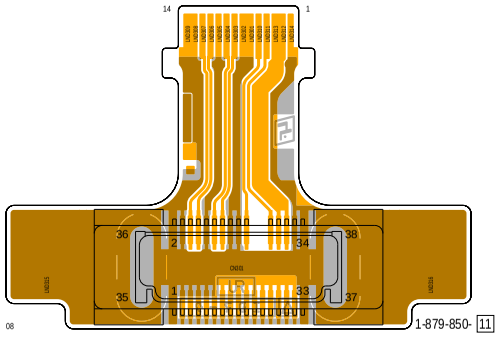

TO SSD UNIT

Note: CN301 is not supplied, but this is included in FP-1151 flexible board.

: Uses unleaded solder.

XL-011 BOARD (SIDE A)

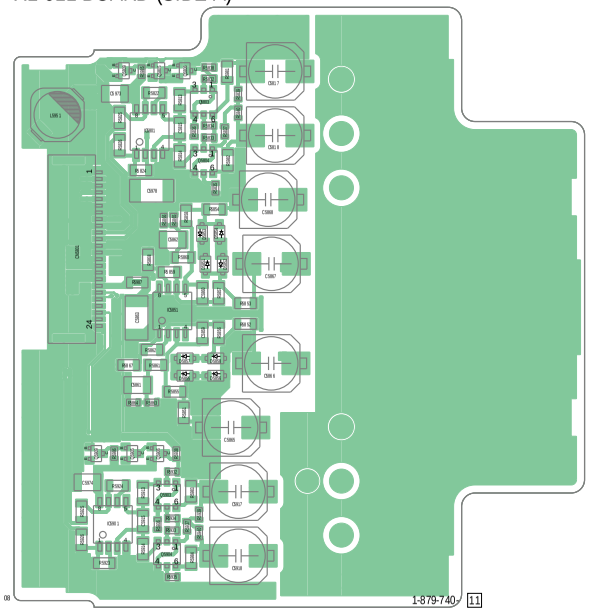

KY-115 BOARD (SIDE A)

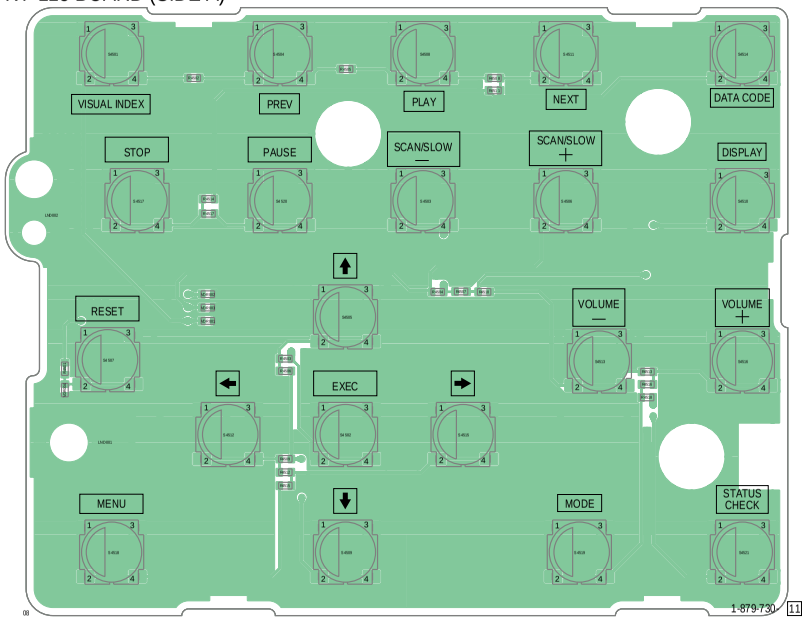

XL-011 BOARD (SIDE B)

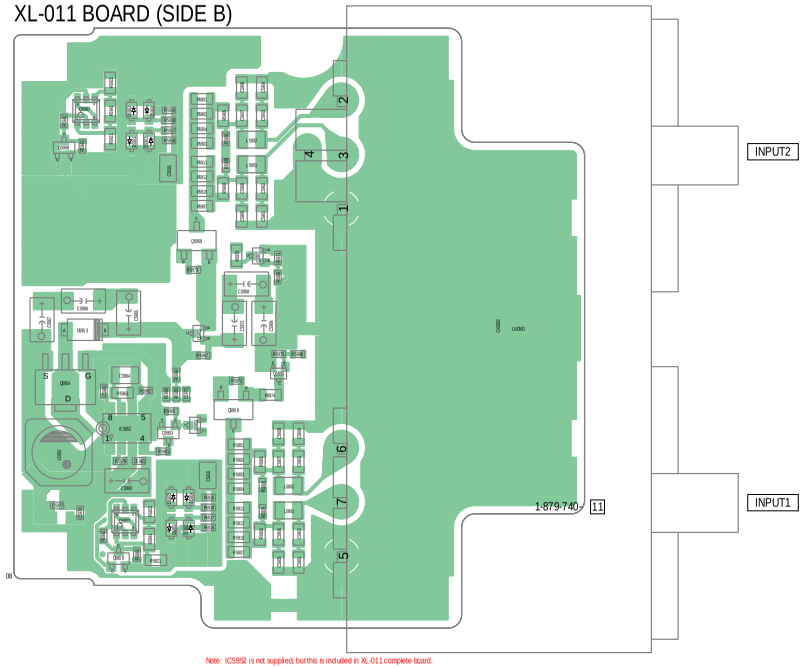

Note: IC5952 is not supplied, but this is included in XL-011 complete board.

KY-115 BOARD (SIDE B)

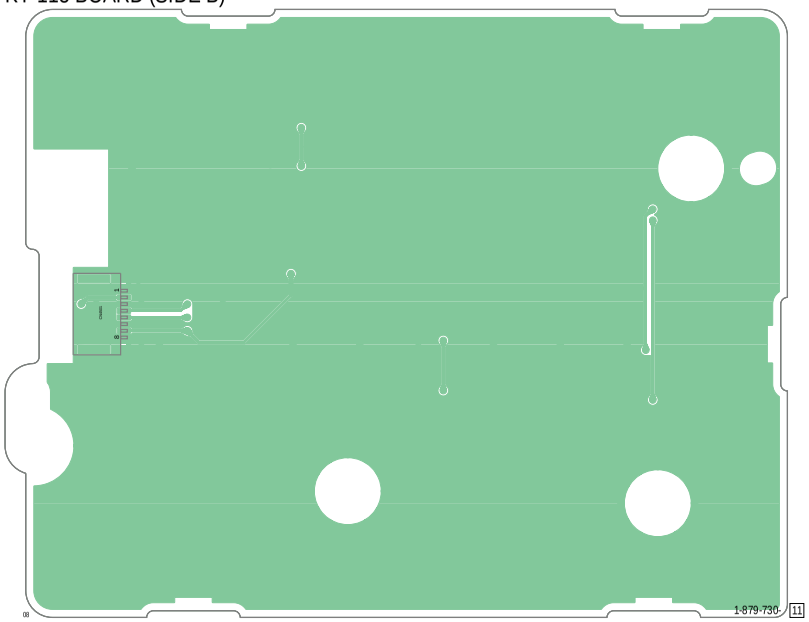

: Uses unleaded solder.

Ver. 1.1 2010.01
The changed portions from
Ver. 1.0 are shown in blue.

MS-424 BOARD (SIDE A)

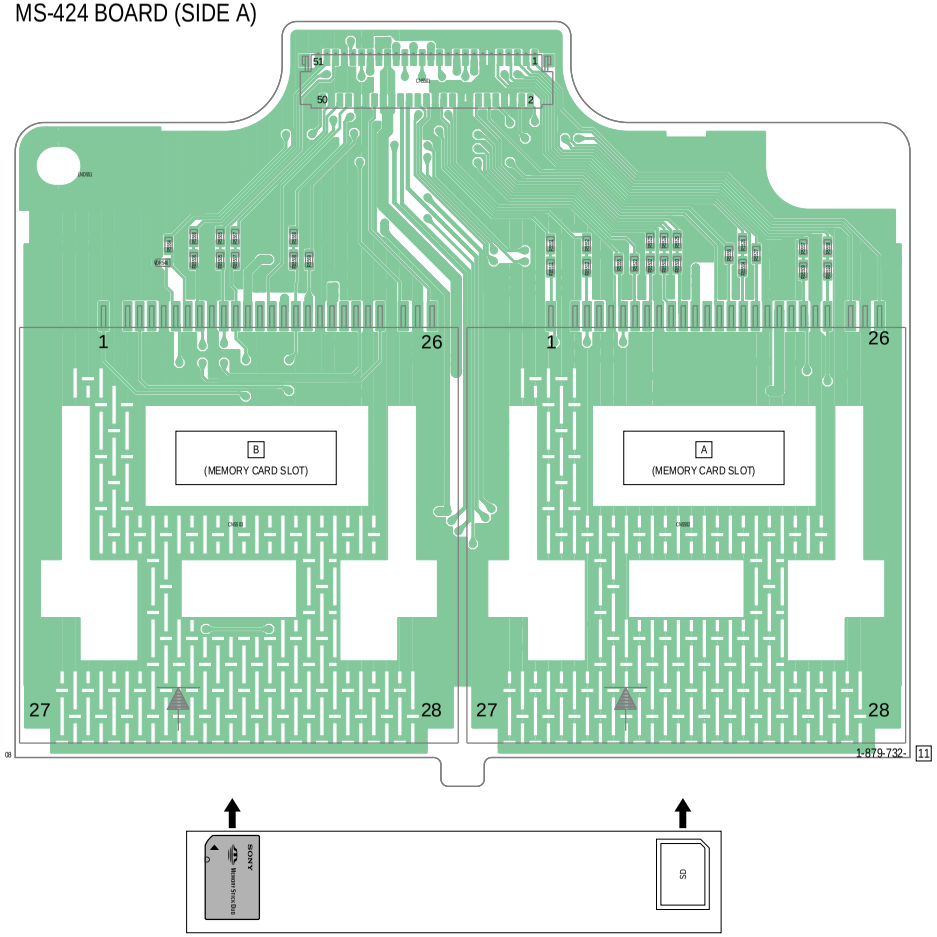

MS-424 BOARD (SIDE B)

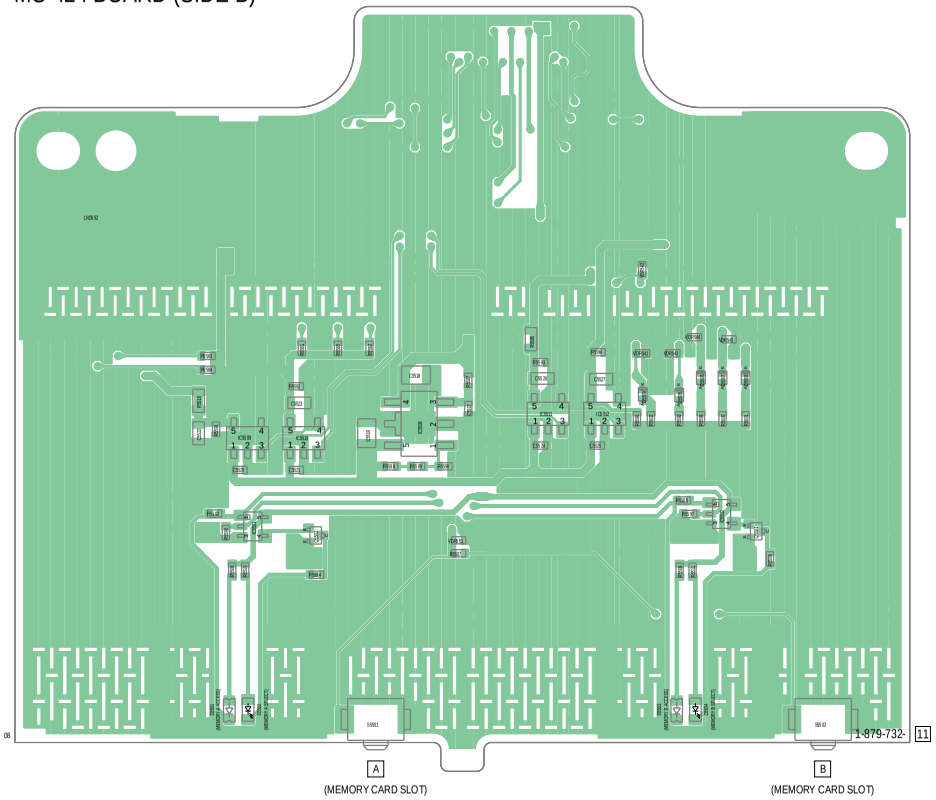

JK-392 BOARD

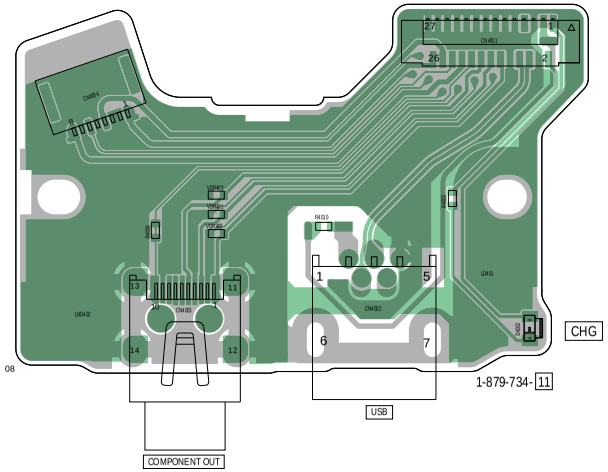

GS-010 BOARD

: EXCEPT NX5C/NX5M

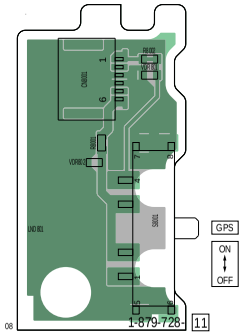

: Uses unleaded solder.

Ver. 1.1 2010.01
The changed portions from
Ver. 1.0 are shown in blue.

FP-1150 FLEXIBLE BOARD

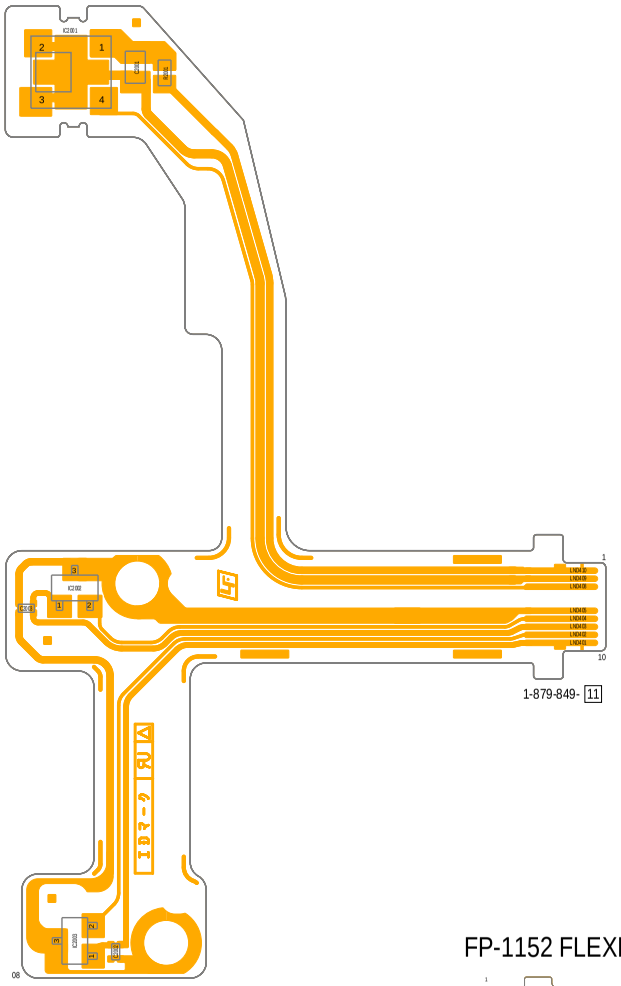

1-879-849- 11

FP-1149 FLEXIBLE BOARD

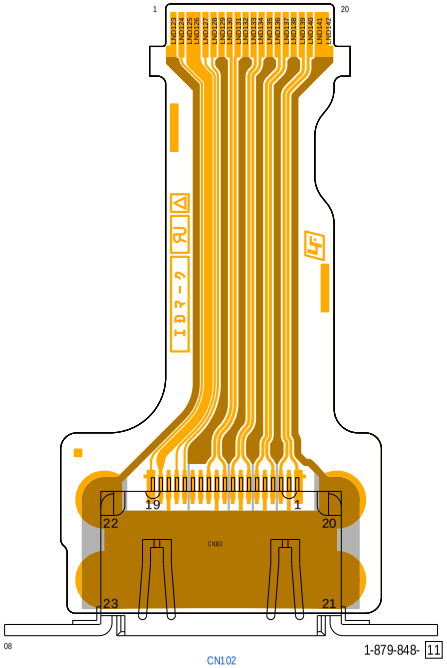

CN102
HDMI OUT

1-879-848- 11

FP-1152 FLEXIBLE BOARD

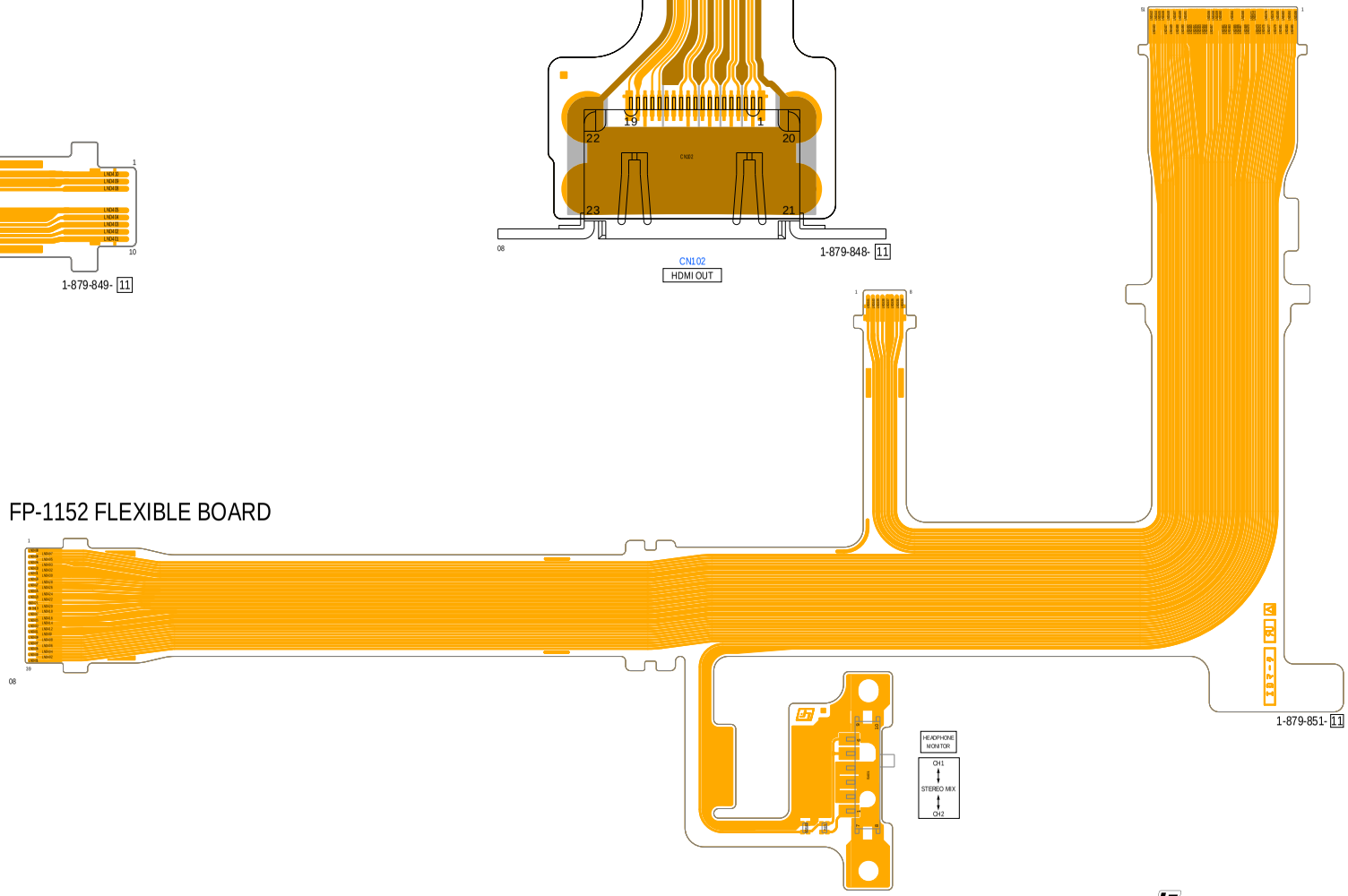

1-879-851- 11

: Uses unleaded solder.