# HCD-DZ860W/DZ870KW/ DZ870M/DZ870W

# SERVICE MANUAL

*AEP Model*
*UK Model*
*HCD-DZ860W*
*E Model*
*HCD-DZ870KW/DZ870W*
*Australian Model*
*HCD-DZ870W*
*Russian Model*
*HCD-DZ870M*

Self Diagnosis Supported model

**Ver. 1.1 2008.07**

Photo : HCD-DZ870KW

- HCD-DZ860W/DZ870KW/DZ870M/DZ870W are the amplifier, DVD/CD and tuner section in DAV-DZ860W/DZ870KW/DZ870M/DZ870W.

This system incorporates with Dolby* Digital and Dolby Pro Logic (II) adaptive matrix surround decoder and the DTS** Digital Surround System.

* Manufactured under license from Dolby Laboratories. "Dolby", "Pro Logic", and the double-D symbol are trademarks of Dolby Laboratories.

** Manufactured under license from DTS, Inc. "DTS" and "DTS Digital Surround" are registered trademarks of DTS, Inc.

| | |
|---|---|
| Model Name Using Similar Mechanism | HCD-DZ260/DZ270/HDZ278 |
| Mechanism Type | CDM85-DVBU102 |
| Optical Pick-up Name | KHM-313CAA |

## SPECIFICATIONS

### Amplifier Section (DZ860W/DZ870KW)

Stereo mode (rated): 108 W + 108 W (at 3 ohms, 1 kHz, 1% THD)

Surround mode (reference): RMS output power
FL/FR/C*: 143 watts (per channel at 3 ohms, 1 kHz, 10% THD)
Subwoofer*: 285 watts (at 1.5 ohms, 80 Hz, 10% THD)

### Amplifier Section (DZ870M)

Stereo mode (rated): 108 W + 108 W (at 3 ohms, 1 kHz, 1% THD)

Surround mode (reference): RMS output power
FL/FR/C/SL/SR*: 143 watts (per channel at 3 ohms, 1 kHz, 10% THD)
Subwoofer*: 285 watts (at 1.5 ohms, 80 Hz, 10% THD)

### Amplifier Section (DZ870W)

Latin American models:
Stereo mode (rated): 108 W + 108 W (at 3 ohms, 1 kHz, 1% THD)

Surround mode (reference): RMS output power
FL/FR/C*: 142 watts (per channel at 3 ohms, 1 kHz, 10% THD)
Subwoofer*: 284 watts (at 1.5 ohms, 80 Hz, 10% THD)

Other models:
Stereo mode (rated): 108 W + 108 W (at 3 ohms, 1 kHz, 1% THD)

Surround mode (reference): RMS output power
FL/FR/C*: 143 watts (per channel at 3 ohms, 1 kHz, 10% THD)
Subwoofer*: 285 watts (at 1.5 ohms, 80 Hz, 10% THD)

** Depending on the decoding mode settings and the source, there may be no sound output.*

Inputs (Analog) (DZ860W)
TV (AUDIO IN): Sensitivity: 450/250 mV
LINE(AUDIO IN): Sensitivity: 450/250 mV
AUDIO IN: Sensitivity: 250/125 mV
Inputs (Analog) (DZ870KW/DZ870M)
TV (AUDIO IN): Sensitivity: 450/250 mV
SAT/CABLE (AUDIO IN): Sensitivity: 450/250 mV
AUDIO IN/MIC1: Sensitivity: AUDIO IN 250/125 mV/MIC1 1 mV
MIC2: Sensitivity: 1 mV
Inputs (Analog) (DZ870W)
TV (AUDIO IN): Sensitivity: 450/250 mV
SAT/CABLE (AUDIO IN): Sensitivity: 450/250 mV
AUDIO IN: Sensitivity: 250/125 mV
Inputs (Digital) (DZ860W/DZ870KW/DZ870M/DZ870W)
TV (COAXIAL IN/OPTICAL IN): Impedance: 75 ohms/-
Outputs (Analog) (DZ860W/DZ870W)
Phones: Accepts low- and high-impedance headphones.

### Super Audio CD/DVD System

Laser: Semiconductor laser (Super Audio CD/DVD: λ = 650 nm) (CD: λ = 790 nm) Emission duration: continuous
Signal format system
Mexican and Latin American models: NTSC
Other models: PAL/NTSC

### USB Section

Supported bit rate
MP3 (MPEG 1 Audio Layer-3): 32 kbps - 320 kbps
WMA: 48 kbps - 192 kbps
AAC: 48 kbps - 320 kbps
Sampling frequencies
MP3 (MPEG 1 Audio Layer-3): 32/44.1/48 kHz
WMA: 44.1 kHz
AAC: 44.1 kHz
(USB) port:
Maximum current: 500 mA

– Continued on next page –

DVD RECEIVER

9-889-099-02
2008G04-1
© 2008.07
**Sony Corporation**
**Audio&Video Business Group**
**Published by Sony Techno Create Corporation**

SONY

### Tuner Section

| | |
|---|---|
| System | PLL quartz-locked digital synthesizer |
| FM tuner section | |
| Tuning range | 87.5 MHz - 108.0 MHz (50 kHz step) |
| Antenna (aerial) | FM wire antenna (aerial) |
| Antenna (aerial) terminals | 75 ohms, unbalanced |
| Intermediate frequency | 10.7 MHz |
| AM tuner section | |
| Tuning range | |
| Mexican, and Latin American models: | |
| | 530 kHz - 1,710 kHz (with the interval set at 10 kHz) |
| | 531 kHz - 1,710 kHz (with the interval set at 9 kHz) |
| European, Russian, and Middle Eastern models: | |
| | 531 kHz - 1,602 kHz (with the interval set at 9 kHz) |
| Australian and New Zealand models: | |
| | 531 kHz - 1,710 kHz (with the interval set at 9 kHz) |
| | 530 kHz - 1,710 kHz (with the interval set at 10 kHz) |
| Other models: | 531 kHz - 1,602 kHz (with the interval set at 9 kHz) |
| | 530 kHz - 1,610 kHz (with the interval set at 10 kHz) |
| Antenna (aerial) | AM loop antenna (aerial) |
| Intermediate frequency | 450 kHz |

### Video Section (DZ860W)

| | |
|---|---|
| Outputs | VIDEO: 1 Vp-p 75 ohms |
| | R/G/B: 0.7 Vp-p 75 ohms |
| | HDMI OUT: Type A (19 pin) |

### Video Section (DZ870KW/DZ870M/DZ870W)

| | |
|---|---|
| Outputs | VIDEO: 1 Vp-p 75 ohms |
| | COMPONENT: |
| | Y: 1 Vp-p 75 ohms |
| | PB/CB, PR/CR: 0.7 Vp-p 75 ohms |
| | HDMI OUT: Type A (19 pin) |

### General

| | |
|---|---|
| Power requirements | |
| Mexican models: | 120 V AC, 60 Hz |
| Taiwan models: | 120 V AC, 50/60 Hz |
| Latin American models: | 110 V - 240 V AC, 50/60 Hz |
| Other models: | 220 V - 240 V AC, 50/60 Hz |
| Power consumption | |
| HCD-DZ870M: | On: 160 W |
| | Standby: 0.3 W (at the Power Saving mode) |
| HCD-DZ860W/DZ870KW/DZ870W: | |
| | On: 130 W |
| | Standby: 0.3 W (at the Power Saving mode) |
| Output voltage (DIGITAL MEDIA PORT) | |
| | DC 5 V |
| Output current (DIGITAL MEDIA PORT) | |
| | 700 mA |
| Dimensions (approx.) | 430 mm × 66 mm × 385 mm (w/h/d) incl. projecting parts |
| HCD-DZ860W/DZ870KW/DZ870W: | |
| | 430 mm × 66 mm × 415 mm (w/h/d) with the wireless transceiver inserted |
| Mass (approx.) | 4.3 kg |

*Design and specifications are subject to change without notice.*

## MODEL IDENTIFICATION
## – Back Panel –

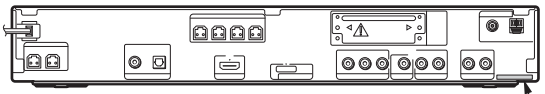

*Parts No.*

| Model | Part No. |
|---|---|
| DZ860W: AEP, UK model | 3-273-763-1□ |
| DZ870KW: SP model | 3-273-763-2□ |
| DZ870M: RU model | 3-273-763-3□ |
| DZ870KW: TH model | 3-273-763-5□ |
| DZ870W: E3 model | 3-273-764-0□ |
| DZ870W: MX model | 3-273-764-1□ |
| DZ870W: AUS model | 3-273-764-2□ |
| DZ870W: KR model | 3-273-764-4□ |
| DZ870W: E32 model | 3-273-764-5□ |
| DZ870W: TW model | 3-273-764-6□ |
| DZ870W: E15 model | 3-273-764-9□ |
| DZ870W: EA model | 3-875-160-7□ |

- Abbreviation
  AUS : Australian model
  E3 : 240V AC area in E model
  E15 : Iran model
  E32 : 110-240V AC area in E model
  EA : Saudi Arabia model
  KR : Korean model
  MX : Mexican model
  RU : Russian model
  SP : Singapore model
  TH : Thai model
  TW : Taiwan model

### Special Component Notice

The components identified by mark 🔒 contain confidential information.
Strictly follow the instructions whenever the components are repaired and/or replaced.

**SAFETY-RELATED COMPONET WARNING!**

**COMPONENTS IDENTIFIED BY MARK ⚠ OR DOTTED LINE WITH MARK ⚠ ON THE SCHEMATIC DIAGRAMS AND IN THE PARTS LIST ARE CRITICAL TO SAFE OPERATION. REPLACE THESE COMPONENTS WITH SONY PARTS WHOSE PART NUMBERS APPEAR AS SHOWN IN THIS MANUAL OR IN SUPPLEMENTS PUBLISHED BY SONY.**

Laser component in this product is capable of emitting radiation exceeding the limit for Class 1.

This appliance is classified as a CLASS 1 LASER product.
This marking is located on the rear or bottom exterior.

**CAUTION**
Use of controls or adjustments or performance of procedures other than those specified herein may result in hazardous radiation exposure.

### Notes on chip component replacement

- Never reuse a disconnected chip component.
- Notice that the minus side of a tantalum capacitor may be damaged by heat.

### Flexible Circuit Board Repairing

- Keep the temperature of soldering iron around 270 °C during repairing.
- Do not touch the soldering iron on the same conductor of the circuit board (within 3 times).
- Be careful not to apply force on the conductor when soldering or unsoldering.

### UNLEADED SOLDER

Boards requiring use of unleaded solder are printed with the lead-free mark (LF) indicating the solder contains no lead.
(Caution: Some printed circuit boards may not come printed with the lead free mark due to their particular size)

### : LEAD FREE MARK

Unleaded solder has the following characteristics.

- Unleaded solder melts at a temperature about 40 °C higher than ordinary solder.
  Ordinary soldering irons can be used but the iron tip has to be applied to the solder joint for a slightly longer time.
  Soldering irons using a temperature regulator should be set to about 350 °C.
  Caution: The printed pattern (copper foil) may peel away if the heated tip is applied for too long, so be careful!
- Strong viscosity
  Unleaded solder is more viscous (sticky, less prone to flow) than ordinary solder so use caution not to let solder bridges occur such as on IC pins, etc.
- Usable with ordinary solder
  It is best to use only unleaded solder but unleaded solder may also be added to ordinary solder.

## About This Operating Instructions

- The instructions in this Operating Instructions describe the controls on the remote. You can also use the controls on the unit if they have the same or similar names as those on the remote.
- The Control Menu items may vary depending on the area.
- “DVD” may be used as a general term for a DVD VIDEO, DVD+RW/DVD+R, and DVD-RW/DVD-R.
- Measurements are expressed in feet (ft) for North American models.
- The default setting is underlined.

## About the S-AIR function

The system is compatible with the S-AIR function, which allows transmission of sound between S-AIR products wirelessly.
The following S-AIR products can be used with the system:

- Surround amplifier (supplied): You can enjoy surround speaker sound wirelessly.
- S-AIR receiver (optional): You can enjoy system sound in another room.

The S-AIR receiver can be purchased as an option (the S-AIR product lineup differs depending on the area).

Notes or instructions for the surround amplifier or S-AIR receiver in this operating instructions refer only to when the surround amplifier or S-AIR receiver is used.
For details on the S-AIR function, see “Using an S-AIR Product” (page 81).

## Playable Discs

| Type | Disc logo | Characteristics | Icon |
|---|---|---|---|
| DVD VIDEO | | • DVD VIDEO<br>• DVD-R/DVD-RW in DVD VIDEO format or video mode<br>• DVD+R/DVD+RW in DVD VIDEO format | DVD-V |
| VR (Video Recording) mode | | • DVD-R/DVD-RW in VR (Video Recording) mode (except for DVD-R DL) | DVD-VR |
| Super Audio CD | | • Super Audio CD | SuperAudioCD |
| VIDEO CD | | • VIDEO CD (Ver. 1.1 and 2.0 discs)<br>• Super VCD<br>• CD-R/CD-RW/CD-ROM in video CD format or Super VCD format | VIDEO CD |
| CD | | • Audio CD<br>• CD-R/CD-RW in audio CD format | CD |
| DATA CD | – | • CD-R/CD-RW/CD-ROM in DATA CD format, containing MP3 files[1)], JPEG image files[2)], and DivX video files[3)4)], and conforming to ISO 9660[5)] Level 1/ Level 2, or Joliet (extended format) | DATA-CD |
| DATA DVD | – | • DVD-ROM/DVD-R/DVD-RW/ DVD+R/DVD+RW in DATA DVD format, containing MP3 files[1)], JPEG image files[2)], and DivX video files[3)4)], and conforming to UDF (Universal Disk Format) | DATA DVD |

[1)]MP3 (MPEG1 Audio Layer 3) is a standard format defined by ISO/MPEG which compresses audio data. MP3 files must be in MPEG1 Audio Layer 3 format.

[2)]JPEG image files must conform to the DCF image file format. (DCF “Design rule for Camera File system”: Image standards for digital cameras regulated by Japan Electronics and Information Technology Industries Association (JEITA).)

[3)] DivX® is a video file compression technology, developed by DivX, Inc.

[4)] DivX, DivX Certified, and associated logos are trademarks of DivX, Inc. and are used under license.

[5)]A logical format of files and folders on CD-ROMs, defined by ISO (International Organization for Standardization).

“DVD-RW,” “DVD+RW,” “DVD+R,”“DVD VIDEO,” and the “CD” logos are trademarks.

## Example of discs that the system cannot play

The system cannot play the following discs:

- CD-ROM/CD-R/CD-RW other than those recorded in the formats listed on page 5
- CD-ROM recorded in PHOTO CD format
- Data part of CD-Extra
- CD Graphics disc
- DVD Audio
- DATA DVD that does not contain MP3 files, JPEG image files, or DivX video files
- DVD-RAM

Also, the system cannot play the following discs:

- A DVD VIDEO with a different region code (page 7)
- A disc that has a non-standard shape (e.g., card, heart)
- A disc with paper or stickers on it
- A disc that has the adhesive of cellophane tape or a sticker still left on it

## Note about CD-R/CD-RW/DVD-R/DVD-RW/DVD+R/DVD+RW

In some cases, CD-R/CD-RW/DVD-R/DVD-RW/DVD+R/DVD+RW cannot be played on this system due to the recording quality or physical condition of the disc, or the characteristics of the recording device and authoring software.
The disc will not play if it has not been correctly finalized. For more information, refer to the operating instructions for the recording device.
Note that some playback functions may not work with some DVD+RWs/DVD+Rs, even if they have been correctly finalized. In this case, view the disc by normal playback. Also some DATA CDs/DATA DVDs created in Packet Write format cannot be played.

### Music discs encoded with copyright protection technologies

This product is designed to play back discs that conform to the Compact Disc (CD) standard. Recently, various music discs encoded with copyright protection technologies are marketed by some record companies. Please be aware that among those discs, there are some that do not conform to the CD standard and may not be playable by this product.

### Note on DualDiscs

A DualDisc is a two sided disc product which mates DVD recorded material on one side with digital audio material on the other side. However, since the audio material side does not conform to the Compact Disc (CD) standard, playback on this product is not guaranteed.

## About Multi Session CD

- This system can play a Multi Session CD when an MP3 file is contained in the first session. Any subsequent MP3 files recorded in later sessions can also be played back.
- This system can play a Multi Session CD when a JPEG image file is contained in the first session. Any subsequent JPEG image files recorded in later sessions can also be played back.
- If MP3 files and JPEG image files in music CD format or video CD format are recorded in the first session, only the first session will be played back.

## Region code

Your system has a region code printed on the rear of the unit and will only play a DVD labeled with the same region code.

A DVD VIDEO labeled will also play on this system.
If you try to play any other DVD VIDEO, the message [Playback prohibited by area limitations.] will appear on the TV screen. Depending on the DVD VIDEO, no region code indication may be given even though playing the DVD VIDEO is prohibited by area restrictions.

## Note about playback operations of a DVD or VIDEO CD

Some playback operations on a DVD or VIDEO CD may be intentionally set by software producers. Since this system will play a DVD or VIDEO CD according to the disc contents the software producers designed, some playback features may not be available. Be sure to read the operating instructions supplied with the DVD or VIDEO CD.

## Copyrights

This product incorporates copyright protection technology that is protected by U.S. patents and other intellectual property rights. Use of this copyright protection technology must be authorized by Macrovision, and is intended for home and other limited viewing uses only unless otherwise authorized by Macrovision. Reverse engineering or disassembly is prohibited.

This system incorporates with Dolby* Digital and Dolby Pro Logic (II) adaptive matrix surround decoder and the DTS** Digital Surround System.

* Manufactured under license from Dolby Laboratories.
"Dolby", "Pro Logic", and the double-D symbol are trademarks of Dolby Laboratories.

** Manufactured under license from DTS, Inc.
"DTS" and "DTS Digital Surround" are registered trademarks of DTS, Inc.

This system incorporates High-Definition Multimedia Interface (HDMI™) technology.
HDMI, the HDMI logo and High-Definition Multimedia Interface are trademarks or registered trademarks of HDMI Licensing LLC.

"BRAVIA" and BRAVIA are trademarks of Sony Corporation.

"S-AIR" and its logo are trademarks of Sony Corporation.

# Self-diagnosis Function

### *(When letters/numbers appear in the display)*

When the self-diagnosis function is activated to prevent the system from malfunctioning, a 5-character service number (e.g., C 13 50) with a combination of a letter and 4 digits appears on the TV screen or front panel display. In this case, check the following table.

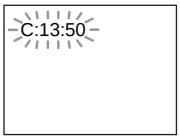


| First 3 characters of the service number | Cause and/or corrective action |
|---|---|
| C 13 | The disc is dirty.<br>➡Clean the disc with a soft cloth (page 97). |
| C 31 | The disc is not inserted correctly.<br>➡Restart the system, then re-insert the disc correctly. |
| E XX<br>(XX is a number) | To prevent a malfunction, the system has performed the self-diagnosis function.<br>➡Contact your nearest Sony dealer or local authorized Sony service facility and give the 5-character service number.<br>Example: E 61 10 |

### When displaying the version number on the TV screen

When you turn on the system, the version number [VER.X.XX] (X is a number) may appear on the TV screen. Although this is not a malfunction and for Sony service use only, normal system operation will not be possible. Turn off the system, and then turn on the system again to operate.

TABLE OF CONTENTS


**1. SERVICING NOTES** ..... 9

**2. GENERAL** ..... 11

**3. DISASSEMBLY**

3-1. Case ..... 24
3-2. POWER Board (DZ860W/DZ870W) ..... 24
3-3. Front Panel Section (DZ860W/DZ870W) ..... 25
3-4. POWER Board (DZ870KW/DZ870M) ..... 25
3-5. Front Panel Section (DZ870KW/DZ870M) ..... 26
3-6. Back Panel Section (DZ870M) ..... 26
3-7. Back Panel Section (Except DZ870M) ..... 27
3-8. DVD Mechanism Deck ..... 27
3-9. MAIN Board ..... 28
3-10. IO-SCART Board (DZ860W), IO-COMPONENT Board (Except DZ860W), SCORE Board (DZ870KW/DZ870M) ..... 28
3-11. Tray ..... 29
3-12. Belt ..... 29
3-13. MS-203 Board ..... 30
3-14. Base Unit ..... 30
3-15. Optical Pick-up ..... 31

**4. TEST MODE** ..... 32

**5. ELECTRICAL ADJUSTMENTS** ..... 37

**6. DIAGRAMS**

6-1. Block Diagram –RF Section– ..... 41
6-2. Block Diagram –VIDEO Section– ..... 42
6-3. Block Diagram –AUDIO Section– ..... 43
6-4. Block Diagram –DSP Section– ..... 44
6-5. Block Diagram –AMP Section– ..... 45
6-6. Block Diagram –POWER Section– ..... 46
6-7. Printed Wiring Board –MAIN Board (Side A)– ..... 47
6-8. Printed Wiring Board –MAIN Board (Side B)– ..... 48
6-9. Schematic Diagram –MAIN Board (1/9)– ..... 49
6-10. Schematic Diagram –MAIN Board (2/9)– ..... 50
6-11. Schematic Diagram –MAIN Board (3/9)– ..... 51
6-12. Schematic Diagram –MAIN Board (4/9), MS-203 Board– ..... 52
6-13. Schematic Diagram –MAIN Board (5/9)– ..... 53
6-14. Schematic Diagram –MAIN Board (6/9)– ..... 54
6-15. Schematic Diagram –MAIN Board (7/9)– ..... 55
6-16. Schematic Diagram –MAIN Board (8/9)– ..... 56
6-17. Schematic Diagram –MAIN Board (9/9)– ..... 57
6-18. Printed Wiring Board –IO-SCART Board (DZ860W)– ..... 58
6-19. Schematic Diagram –IO-SCART Board (DZ860W)– ..... 59
6-20. Printed Wiring Board –IO-COMPONENT Board (DZ870KW/DZ870M/DZ870W)– ..... 60
6-21. Schematic Diagram –IO-COMPONENT Board (DZ870KW/DZ870M/DZ870W)– ..... 61
6-22. Printed Wiring Boards –JACK, P-SW Board– ..... 62
6-23. Schematic Diagram –JACK, P-SW Board– ..... 63
6-24. Printed Wiring Boards –FL, MS-203, SPEAKER Board– ..... 64
6-25. Schematic Diagram –FL, SPEAKER Board– ..... 65
6-26. Printed Wiring Board –DSP Board (Side A)– ..... 66
6-27. Printed Wiring Board –DSP Board (Side B)– ..... 67
6-28. Schematic Diagram –DSP Board– ..... 68
6-29. Printed Wiring Board –S-AIR-INC Board (Side A) (DZ860W/DZ870KW/DZ870W)– ..... 69
6-30. Printed Wiring Board –S-AIR-INC Board (Side B) (DZ860W/DZ870KW/DZ870W)– ..... 70
6-31. Schematic Diagram –S-AIR-INC Board (DZ860W/DZ870KW/DZ870W)– ..... 71
6-32. Printed Wiring Board –S-AIR-CON Board (DZ870M)– ..... 72
6-33. Schematic Diagram –S-AIR-CON Board (DZ870M)– ..... 73
6-34. Printed Wiring Board –SERIPARA (DSR) Board– ..... 74
6-35. Schematic Diagram –SERIPARA (DSR) Board– ..... 75
6-36. Printed Wiring Board –SCORE Board (DZ870KW/DZ870M)– ..... 76
6-37. Schematic Diagram –SCORE Board (DZ870KW/DZ870M)– ..... 77
6-38. Printed Wiring Board –POWER Board– ..... 78
6-39. Schematic Diagram –POWER Board– ..... 79

**7. EXPLODED VIEWS**

7-1. Overall Section ..... 97
7-2. Front Panel Section ..... 98
7-3. Chassis Section ..... 99
7-4. DVD Mechanism Deck Section (CDM85-DVBU102) ..... 100

**8. ELECTRICAL PARTS LIST** ..... 101

# SECTION 1
# SERVICING NOTES

## NOTES ON HANDLING THE OPTICAL PICK-UP BLOCK OR BASE UNIT

The laser diode in the optical pick-up block may suffer electrostatic break-down because of the potential difference generated by the charged electrostatic load, etc. on clothing and the human body.
During repair, pay attention to electrostatic break-down and also use the procedure in the printed matter which is included in the repair parts.
The flexible board is easily damaged and should be handled with care.

## NOTES ON LASER DIODE EMISSION CHECK

The laser beam on this model is concentrated so as to be focused on the disc reflective surface by the objective lens in the optical pickup block. Therefore, when checking the laser diode emission, observe from more than 30 cm away from the objective lens.

## LASER DIODE AND FOCUS SEARCH

1. Open the case and turn POWER on with no disc inserted.
2. Confirm that the following operation is performed while observing the objecting lens from the clearance of DVD mechanism deck.
   1) Confirm that laser beam is spread.
   2) Up and down motion of the objective lens. (2 times)

## DISC TRAY LOCK

The disc tray lock function for the antitheft of an demonstration disc in the store is equipped.

**Setting Procedure :**

1. Press the [I/⏻] button to turn the set on.
2. Press the [FUNCTION] button to set DVD function.
3. Insert a disc.
4. Press the [■] button and the [⏏] button simultaneously for five seconds.
5. The message “LOCKED” is displayed and the tray is locked.

**Releasing Procedure :**

1. Press the [■] button and the [⏏] button simultaneously for five seconds again.
2. The message “UNLOCKED” is displayed and the tray is unlocked.

**Note:** When “LOCKED” is displayed, the tray lock is not released by turning power on/off with the [I/⏻] button.

## On cleaning discs, disc/lens cleaners

- Do not use cleaning discs or disc/lens cleaners (including wet or spray types). These may cause the apparatus to malfunction.

## IMPORTANT NOTICE

Caution: This system is capable of holding a still video image or on-screen display image on your television screen indefinitely. If you leave the still video image or on-screen display image displayed on your TV for an extended period of time you risk permanent damage to your television screen.
Projection televisions are especially susceptible to this.

## Attention when transported

Use this mode when returning the set to the customer after repair.

**Procedure:**

1. Press the [I/⏻] button to turn the set on.
2. Press the [FUNCTION] button to set the function “DVD”.
3. Remove all discs, and then press two buttons [▷] and [I/⏻] simultaneously.
4. After a message “MECHA LOCK” is displayed on the fluorescent indicator tube, pull out the AC plug.
5. To exit from this mode, press the [I/⏻] button to turn the set on.

## How to open the disc table when power switch turns off

Insert a tapering driver into the aperture of the unit bottom, and slide it in the direction of the arrow.

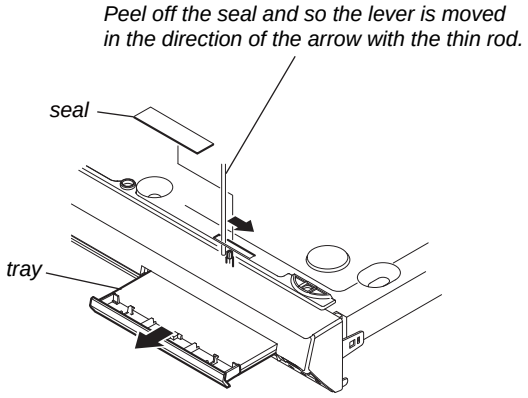


## Precaution when installing a new OP unit/ Precaution before unsoldering the static electricity prevention solder bridge

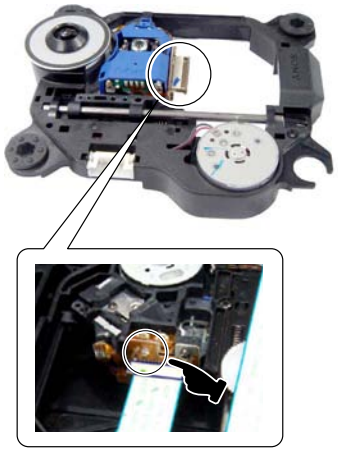

When installing a new OP unit, be sure to connect the flexible printed circuit board first of all before removing the static electricity prevention solder bridge by unsoldering.
Remove the static electricity prevention solder bridge by unsoldering after the flexible printed circuit board has already been connected.
(Do not remove nor unsolder the solder bridge as long as the OP unit is kept standalone.)

**Radiation Sheet**

When peeling off the heat radiation sheet, try always to put it on be former position.

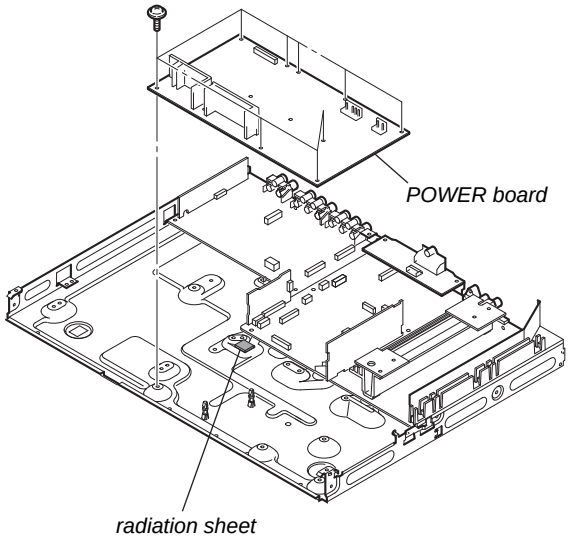

This section is extracted from instruction manual.

# Index to Parts and Control **(DZ860W)**

For more information, refer to the pages indicated in parentheses.

## Front panel

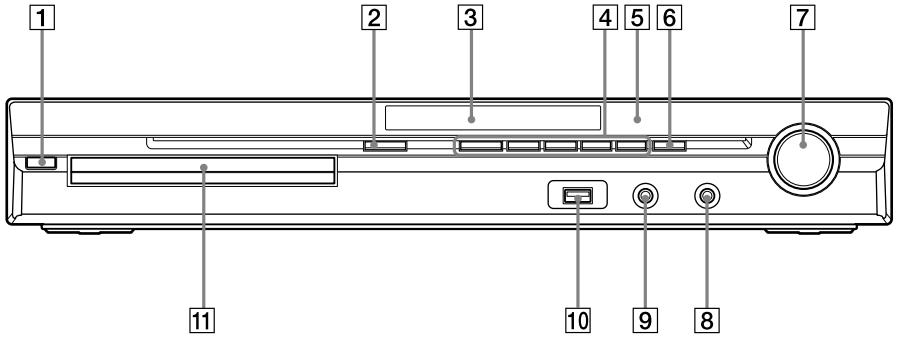


1 **I/⏻ (on/standby) (29, 95)**
2 **⏏ (open/close) (38)**
3 **Front panel display (116)**
4 **Play operation buttons (38)**
5 **R (remote sensor) (9)**
6 **FUNCTION (32)**
7 **VOLUME control (38)**
8 **PHONES jack (38)**
9 **AUDIO IN/A.CAL MIC jack (22, 29, 88)**
10 **⇠ (USB) port (71)**
11 **Disc tray (38)**

## Rear panel

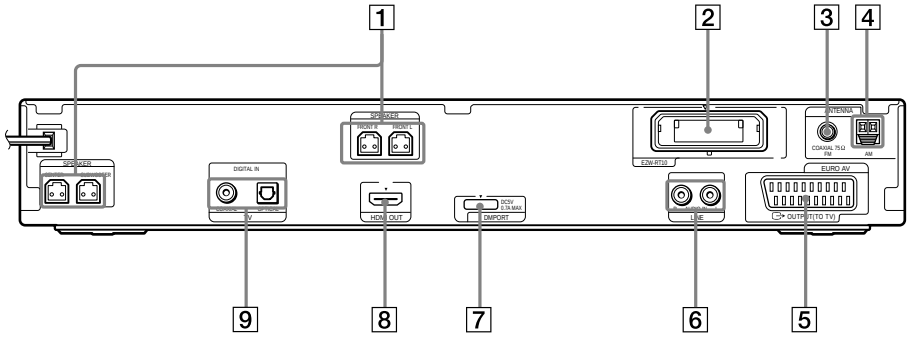


1 **SPEAKER jacks (20)**
2 **EZW-RT10 slot (25)**
3 **COAXIAL 75Ω FM jack (24)**
4 **AM terminal (24)**
5 **EURO AV ⇨ OUTPUT (TO TV) jack (21)**
6 **LINE (AUDIO IN R/L) jacks (22)**
7 **DMPORT (DIGITAL MEDIA PORT) jack (22, 80)**
8 **HDMI OUT jack (21)**
9 **TV (DIGITAL IN COAXIAL/OPTICAL) jacks (21)**

## Front panel display

About the indications in the front panel display

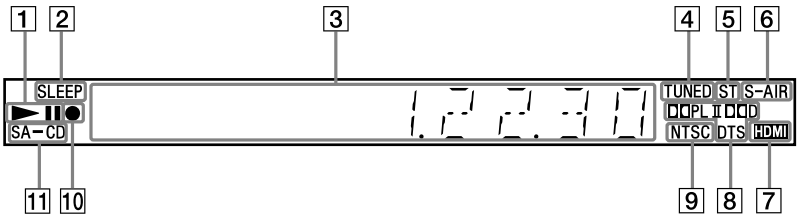


1. **Playing status**
2. **Flashes when the sleep timer is set. (91)**
3. **Displays system's status such as chapter, title, or track number, time information, radio frequency, playing status, decoding mode, etc.**
4. **Lights up when a station is received. (Radio only) (64)**
5. **Stereo/Monaural effect (Radio only) (65)**
6. **Lights up when the S-AIR transceiver is inserted in the unit and the system transmits the sound. (81)**
7. **Lights up when the HDMI OUT jack is correctly connected to HDCP (High-bandwidth Digital Content Protection) compliant device with HDMI or DVI (Digital Visual Interface) input. (21)**
8. **Current surround format (Except for JPEG image file)**
9. **Lights up when an NTSC disc is loaded.**
10. **Lights up during USB recording/copying. (77)**
11. **Lights up when Super Audio CD/CD is loaded. (41)**

## Remote control

| ALPHABETICAL ORDER | | BUTTON DESCRIPTIONS |
|---|---|---|
| A – M | N – Z | |
| ANALOG 33 (89) | NIGHT 20 (91) | Number buttons 3 (42, 64, 89) |
| ANGLE 5 (39) | ONE-TOUCH PLAY 35 (69) | Colored buttons 31 (89) |
| AUDIO 30 (37, 40) | PICTURE NAVI 15 (49, 73) | I/⏻ (on/standby) 1 (26, 29, 38) |
| CLEAR 32 (44, 56, 65) | PRESET +/– 8 (65) | TV I/⏻ (on/standby) 19 (89) |
| D.TUNING 22 (65) | PROG +/– 10 (89) | ←/↑/↓/→/ ⊕ 14 (26, 29, 41, 44, 64, 87) |
| DIGITAL 21 (89) | S-AIR MODE 17 (81) | ←•/•→ REPLAY/ADVANCE 23 (38) |
| DIMMER 33 (92) | SLEEP 34 (91) | ⏮/⏭ 8 (38) |
| DISPLAY 16 (66, 76, 92) | SOUND MODE +/– 10 (36) | ◀◀/▶▶ 27 (38) |
| DVD MENU 6 (46) | SUBTITLE 22 (40) | ◀I/I▶ 27 (38) |
| DVD TOP MENU 29 (46) | SYSTEM MENU 7 (26, 32, 85, 91, 92) | ▷ (play) 9 (38) |
| DYNAMIC BASS 21 (91) | THEATRE 18 (68) | ■ (stop) 24 (38) |
| ENTER* 4 (26, 29, 41, 44, 64, 87) | TOOLS 7 (89) | II (pause) 26 (38) |
| FUNCTION +/– 2 (32, 38) | TUNING +/– 27 (64) | DISPLAY** 28 (29, 41, 44, 87) |
| MENU 28 (89) | TV 12 (89) | RETURN 13 (42, 89) |
| MUTING 25 (38) | TV VOL +/– 11 (89) | -/-- 4 (89) |
| | VOLUME +/– 11 (38) | i+/? 16 (89) |
| | | 32 (89) |
| | | 29 (89) |
| | | 6 (89) |
| | | 10 (89) |

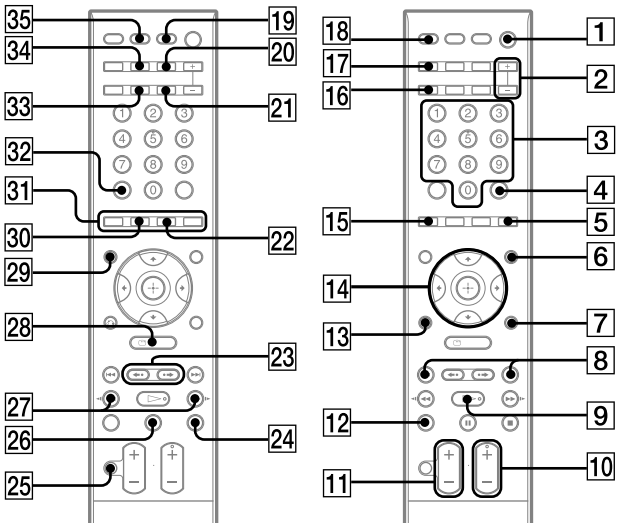


* The ENTER button has the same function as the ⊕ button. When you operate the TV, the ENTER button is used for selecting a channel, and the ⊕ button is used for selecting menu items (page 89).

** This button is available for the “DVD,” “USB,” or “DMPORT” function. Depending on the DIGITAL MEDIA PORT adapter, this button may not work.

# Index to Parts and Control **(DZ870KW)**

For more information, refer to the pages indicated in parentheses.

## Front panel

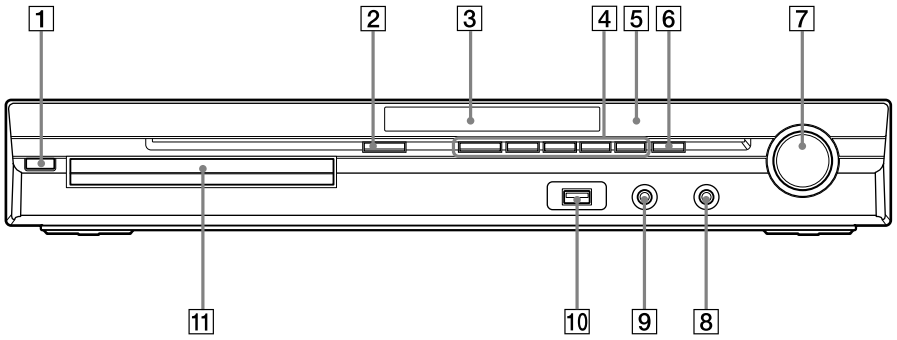


1 **I/⏻ (on/standby) (29, 97)**
2 **⏏ (open/close) (38)**
3 **Front panel display (118)**
4 **Play operation buttons (38)**
5 **(remote sensor) (8)**
6 **FUNCTION (32)**
7 **VOLUME control (38)**
8 **MIC2 jack (89)**
9 **AUDIO IN/MIC1/A.CAL MIC jack (22, 29, 86)**
10 **(USB) port (70)**
11 **Disc tray (38)**

## Rear panel

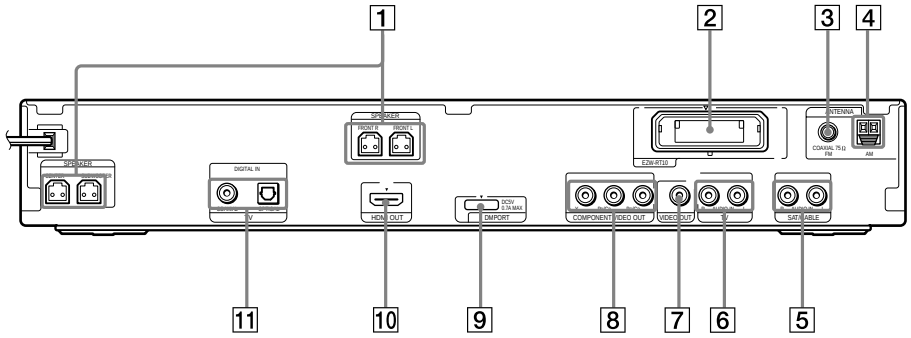


1 **SPEAKER jacks (19)**
2 **EZW-RT10 slot (25)**
3 **COAXIAL 75Ω FM jack (24)**
4 **AM terminal (24)**
5 **SAT/CABLE (AUDIO IN R/L) jacks (22)**
6 **TV (AUDIO IN R/L) jacks (20)**
7 **VIDEO OUT jack (20)**
8 **COMPONENT VIDEO OUT jacks (20)**
9 **DMPORT (DIGITAL MEDIA PORT) jack (22, 79)**
10 **HDMI OUT jack (20)**
11 **TV (DIGITAL IN COAXIAL/OPTICAL) jacks (20)**

## Front panel display

About the indications in the front panel display

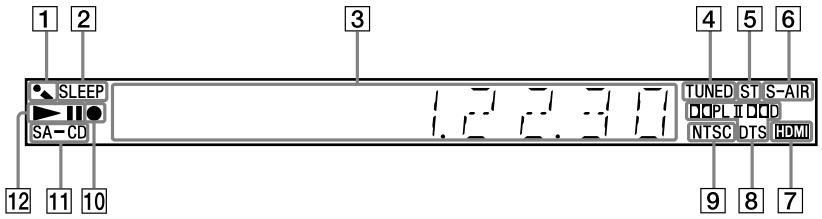


1. **Lights up when the karaoke mode is on. (89)**
2. **Flashes when the sleep timer is set. (93)**
3. **Displays system's status such as chapter, title, or track number, time information, radio frequency, playing status, decoding mode, etc.**
4. **Lights up when a station is received. (Radio only) (64)**
5. **Stereo/Monaural effect (Radio only) (65)**
6. **Lights up when the S-AIR transceiver is inserted in the unit and the system transmits the sound. (80)**
7. **Lights up when the HDMI OUT jack is correctly connected to HDCP (High-bandwidth Digital Content Protection) compliant device with HDMI or DVI (Digital Visual Interface) input. (20)**
8. **Current surround format (Except for JPEG image file)**
9. **Lights up when the color system is set to NTSC. (Asian, Australian, and Middle Eastern models only)**
10. **Lights up during USB recording/ copying. (76)**
11. **Lights up when Super Audio CD/CD is loaded. (41)**
12. **Playing status**

## Remote control

**ALPHABETICAL ORDER**

A – M

ANALOG 38 (87)
ANGLE 4 (39)
AUDIO 35 (37, 40)
CLEAR 37 (43, 56, 65)
D.TUNING 25 (65)
DIGITAL 24 (87)
DISPLAY 19 (66, 75, 94)
DVD MENU 5 (46)
DVD TOP MENU 34 (46)
DYNAMIC BASS 24 (93)
ECHO 11 (90)
ENTER* 3 (26, 29, 41, 43, 64, 85)
FUNCTION +/– 2 (32, 38)
KARAOKE PON 10 (91)
KEYCON #/♭ 29 (91)
MENU 33 (87)
MIC VOL +/– 12 (90)
MUTING 30 (38)

N – Z

NIGHT 23 (93)
ONE-TOUCH PLAY 40 (68)
PICTURE NAVI 17 (48, 72)
PRESET +/– 7 (65)
PROG +/– 9 (87)
SCORE 28 (92)
SLEEP 20 (93)
SOUND MODE +/– 39 (36)
SUBTITLE 25 (40)
SYSTEM MENU 6 (26, 33, 80, 93, 94)
THEATRE 21 (67)
TOOLS 6 (87)
TUNING +/– 32 (64)
TV 14 (87)
TV VOL +/– 13 (87)
VOLUME +/– 13 (38)

**BUTTON DESCRIPTIONS**

Number buttons 18 (42, 64, 87)
Colored buttons 36 (87)
I/⏻ (on/standby) 1 (26, 29, 38)
TV I/⏻ (on/standby) 22 (87)
←/↑/↓/→/⊕ 16 (26, 29, 41, 43, 64, 85)
←●/●→ REPLAY/ADVANCE 26 (38)
⏮/⏭ 7 (38)
◀◀/▶▶ 32 (38)
◀I/I▶ 32 (38)
▷ (play) 8 (38)
■ (stop) 27 (38)
II (pause) 31 (38)
DISPLAY** 33 (29, 41, 43, 85)
RETURN 15 (42, 87)
-/-- 3 (87)
i+/? 19 (87)
37 (87)
34 (87)
⏏/⏻ 5 (87)
9/9 (87)

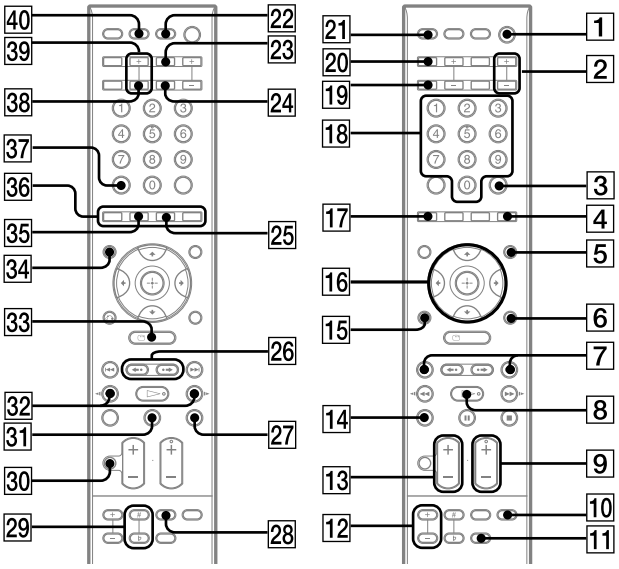


* The ENTER button has the same function as the ⊕ button. When you operate the TV, the ENTER button is used for selecting a channel, and the ⊕ button is used for selecting menu items (page 87).

** This button is available for the “DVD,” “USB,” or “DMPORT” function. Depending on the DIGITAL MEDIA PORT adapter, this button may not work.

# Index to Parts and Control **(DZ870M)**

For more information, refer to the pages indicated in parentheses.

## Front panel

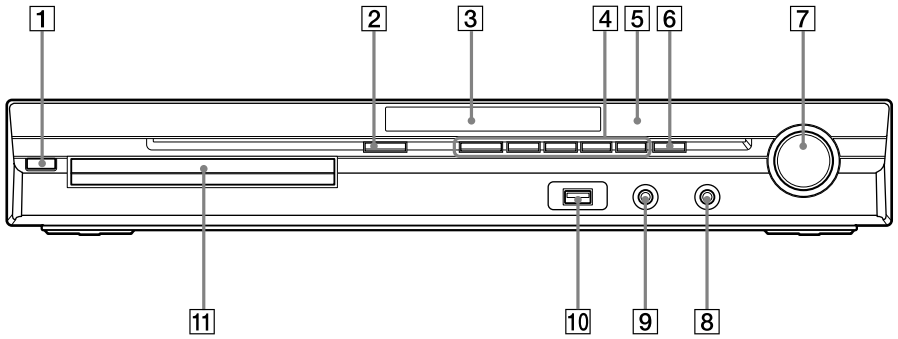


1 **I/⏻ (on/standby) (26, 96)**
2 **⏏ (open/close) (35)**
3 **Front panel display (116)**
4 **Play operation buttons (35)**
5 **(remote sensor) (9)**
6 **FUNCTION (29)**
7 **VOLUME control (35)**
8 **MIC2 jack (88)**
9 **AUDIO IN/MIC1/A.CAL MIC jack (22, 26, 85)**
10 **(USB) port (68)**
11 **Disc tray (35)**

## Rear panel

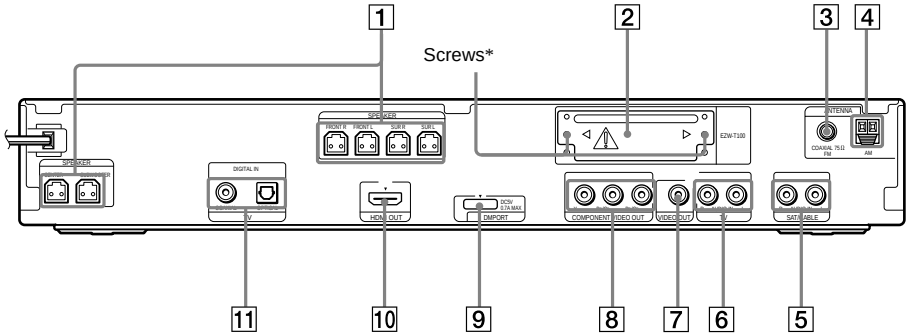


1 **SPEAKER jacks (19)**
2 **EZW-T100 slot (22)**
3 **COAXIAL 75Ω FM jack (24)**
4 **AM terminal (24)**
5 **SAT/CABLE (AUDIO IN R/L) jacks (22)**
6 **TV (AUDIO IN R/L) jacks (20)**
7 **VIDEO OUT jack (20)**
8 **COMPONENT VIDEO OUT jacks (20)**
9 **DMPORT (DIGITAL MEDIA PORT) jack (22, 77)**
10 **HDMI OUT jack (20)**
11 **TV (DIGITAL IN COAXIAL/OPTICAL) jacks (20)**

* ⚠ CAUTION

Please do not remove the screws before installing the EZW-T100.

## Front panel display

About the indications in the front panel display

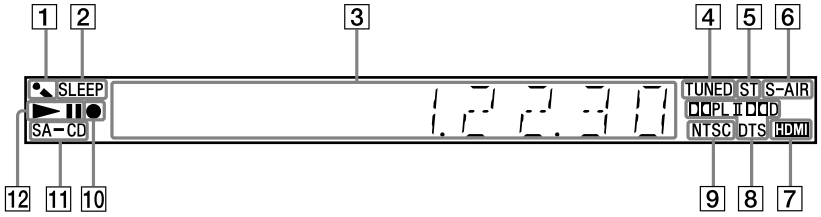


1. **Lights up when the karaoke mode is on. (88)**
2. **Flashes when the sleep timer is set. (92)**
3. **Displays system's status such as chapter, title, or track number, time information, radio frequency, playing status, decoding mode, etc.**
4. **Lights up when a station is received. (Radio only) (61)**
5. **Stereo/Monaural effect (Radio only) (62)**
6. **Lights up when the S-AIR transmitter (not supplied) is inserted in the unit and the system transmits the sound. (78)**
7. **Lights up when the HDMI OUT jack is correctly connected to HDCP (High-bandwidth Digital Content Protection) compliant device with HDMI or DVI (Digital Visual Interface) input. (20)**
8. **Current surround format (Except for JPEG image file)**
9. **Lights up when an NTSC disc is loaded.**
10. **Lights up during USB recording/ copying. (74)**
11. **Lights up when Super Audio CD/CD is loaded. (38)**
12. **Playing status**

## Remote control

**ALPHABETICAL ORDER**

A – M

ANALOG 38 (86)
ANGLE 4 (36)
AUDIO 35 (34, 37)
CLEAR 37 (40, 53, 62)
D.TUNING 25 (62)
DIGITAL 24 (86)
DISPLAY 19 (63, 73, 93)
DVD MENU 5 (43)
DVD TOP MENU 34 (43)
DYNAMIC BASS 24 (92)
ECHO 11 (89)
ENTER* 3 (25, 26, 38, 40, 61, 84)
FUNCTION +/– 2 (29, 35)
KARAOKE PON 10 (90)
KEYCON #/♭ 29 (90)
MENU 33 (86)
MIC VOL +/– 12 (89)
MUTING 30 (35)

N – Z

NIGHT 23 (92)
ONE-TOUCH PLAY 40 (66)
PICTURE NAVI 17 (46, 70)
PRESET +/– 7 (62)
PROG +/– 9 (86)
SCORE 28 (91)
SLEEP 20 (92)
SOUND MODE +/– 39 (33)
SUBTITLE 25 (36)
SYSTEM MENU 6 (25, 30, 78, 92, 93)
THEATRE 21 (65)
TOOLS 6 (86)
TUNING +/– 32 (61)
TV 14 (86)
TV VOL +/– 13 (86)
VOLUME +/– 13 (35)

**BUTTON DESCRIPTIONS**

Number buttons 18 (39, 61, 86)
Colored buttons 36 (86)
I/⏻ (on/standby) 1 (25, 26, 35)
TV I/⏻ (on/standby) 22 (86)
←/↑/↓/→/⊕ 16 (25, 26, 38, 40, 61, 84)
←●/●→ REPLAY/ADVANCE 26 (35)
⏮/⏭ 7 (35)
◀◀/▶▶ 32 (35)
◀I/I▶ 32 (35)
▷ (play) 8 (35)
■ (stop) 27 (35)
II (pause) 31 (35)
DISPLAY** 33 (26, 38, 40, 84)
RETURN 15 (39, 86)
-/-- 3 (86)
/ 19 (86)
37 (86)
34 (86)
/ 5 (86)
/ 9 (86)

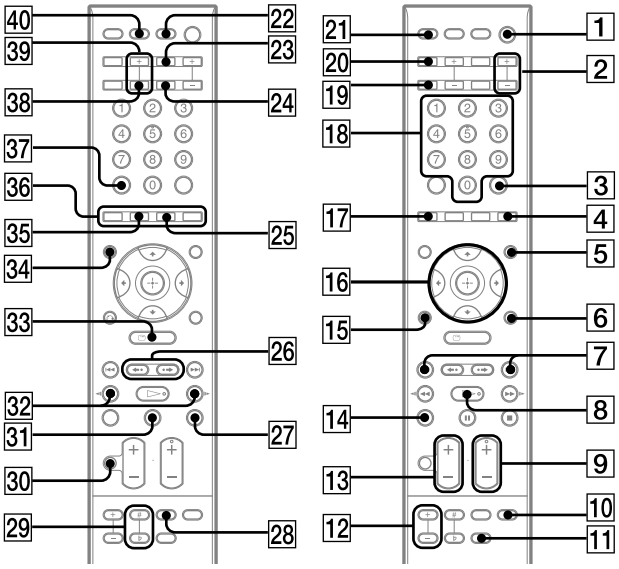


* The ENTER button has the same function as the ⊕ button. When you operate the TV, the ENTER button is used for selecting a channel, and the ⊕ button is used for selecting menu items (page 86).

** This button is available for the "DVD," "USB," or "DMPORT" function. Depending on the DIGITAL MEDIA PORT adapter, this button may not work.

# Index to Parts and Control **(DZ870W)**

For more information, refer to the pages indicated in parentheses.

## Front panel

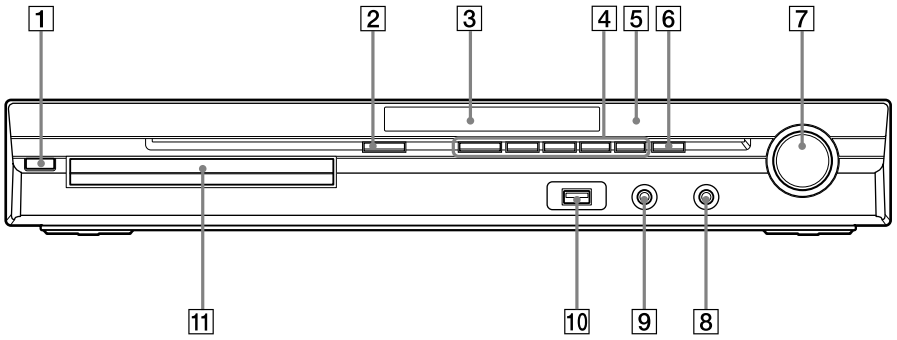


1 **I/⏻ (on/standby) (30, 95)**
2 **⏏ (open/close) (39)**
3 **Front panel display (117)**
4 **Play operation buttons (39)**
5 **(remote sensor) (9)**
6 **FUNCTION (33)**
7 **VOLUME control (39)**
8 **PHONES jack (39)**
9 **AUDIO IN/A.CAL MIC jack (23, 30, 88)**
10 **(USB) port (71)**
11 **Disc tray (39)**

## Rear panel

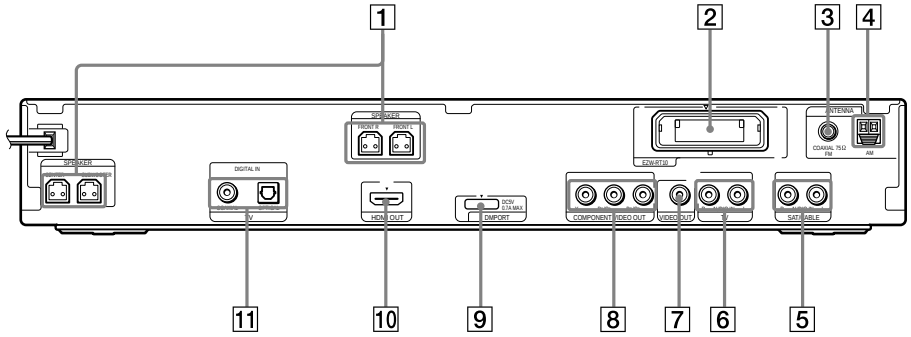


1 **SPEAKER jacks (20)**
2 **EZW-RT10 slot (26)**
3 **COAXIAL 75Ω FM jack (25)**
4 **AM terminal (25)**
5 **SAT/CABLE (AUDIO IN R/L) jacks (23)**
6 **TV (AUDIO IN R/L) jacks (21)**
7 **VIDEO OUT jack (21)**
8 **COMPONENT VIDEO OUT jacks (21)**
9 **DMPORT (DIGITAL MEDIA PORT) jack (23, 80)**
10 **HDMI OUT jack (21)**
11 **TV (DIGITAL IN COAXIAL/OPTICAL) jacks (21)**

## Front panel display

About the indications in the front panel display

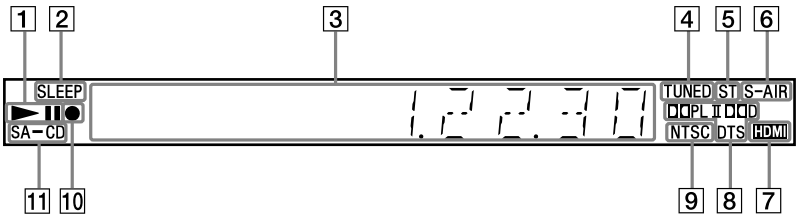


1. **Playing status**
2. **Flashes when the sleep timer is set. (91)**
3. **Displays system's status such as chapter, title, or track number, time information, radio frequency, playing status, decoding mode, etc.**
4. **Lights up when a station is received. (Radio only) (65)**
5. **Stereo/Monaural effect (Radio only) (66)**
6. **Lights up when the S-AIR transceiver is inserted in the unit and the system transmits the sound. (81)**
7. **Lights up when the HDMI OUT jack is correctly connected to HDCP (High-bandwidth Digital Content Protection) compliant device with HDMI or DVI (Digital Visual Interface) input. (21)**
8. **Current surround format (Except for JPEG image file)**
9. **Lights up when the color system is set to NTSC. (Asian, Australian, and Middle Eastern models only)**
10. **Lights up during USB recording/ copying. (77)**
11. **Lights up when Super Audio CD/CD is loaded. (42)**

## Remote control

**ALPHABETICAL ORDER**

A – M

ANALOG 33 (89)
ANGLE 5 (40)
AUDIO 30 (38, 41)
CLEAR 32 (45, 57, 66)
D.TUNING 22 (66)
DIGITAL 21 (89)
DIMMER 33 (92)
DISPLAY 16 (67, 76, 92)
DVD MENU 6 (47)
DVD TOP MENU 29 (47)
DYNAMIC BASS 21 (91)
ENTER* 4 (27, 30, 42, 45, 65, 87)
FUNCTION +/– 2 (33, 39)
MENU 28 (89)
MUTING 25 (39)

N – Z

NIGHT 20 (91)
ONE-TOUCH PLAY 35 (69)
PICTURE NAVI 15 (50, 73)
PRESET +/– 8 (66)
PROG +/– 10 (89)
S-AIR MODE 17 (81)
SLEEP 34 (91)
SOUND MODE +/– 10 (37)
SUBTITLE 22 (41)
SYSTEM MENU 7 (27, 34, 85, 91, 92)
THEATRE 18 (68)
TOOLS 7 (89)
TUNING +/– 27 (65)
TV 12 (89)
TV VOL +/– 11 (89)
VOLUME +/– 11 (39)

**BUTTON DESCRIPTIONS**

Number buttons 3 (43, 65, 89)
Colored buttons 31 (89)
I/⏻ (on/standby) 1 (27, 30, 39)
TV I/⏻ (on/standby) 19 (89)
←/↑/↓/→/⊕ 14 (27, 30, 42, 45, 65, 87)
⏮/⏭ REPLAY/ADVANCE 23 (39)
⏮/⏭ 8 (39)
◀◀/▶▶ 27 (39)
◀❙/❙▶ 27 (39)
▷ (play) 9 (39)
■ (stop) 24 (39)
❚❚ (pause) 26 (39)
DISPLAY** 28 (30, 42, 45, 87)
RETURN 13 (43, 89)
-/-- 4 (89)
i+/? 16 (89)
32 (89)
29 (89)
⏏/⏻ 6 (89)
TV CH +/– 10 (89)

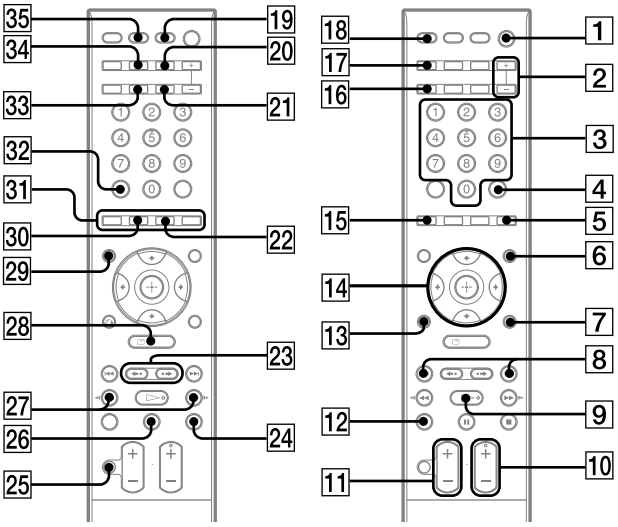


* The ENTER button has the same function as the ⊕ button. When you operate the TV, the ENTER button is used for selecting a channel, and the ⊕ button is used for selecting menu items (page 89).

** This button is available for the “DVD,” “USB,” or “DMPORT” function. Depending on the DIGITAL MEDIA PORT adapter, this button may not work.

# SECTION 3
# DISASSEMBLY

- This set can be disassembled in the order shown below.

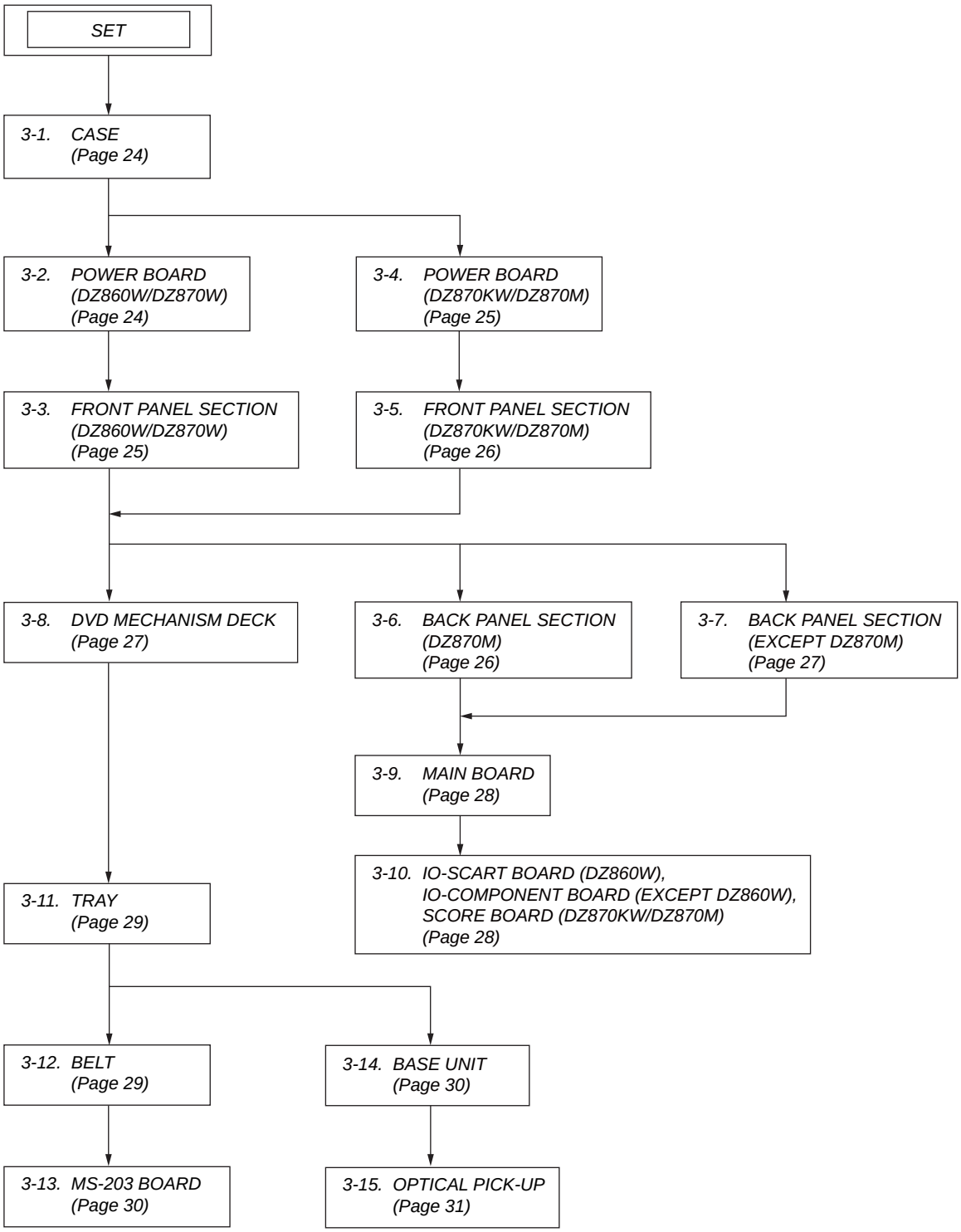

**Note:** Follow the disassembly procedure in the numerical order given.

### 3-1. CASE

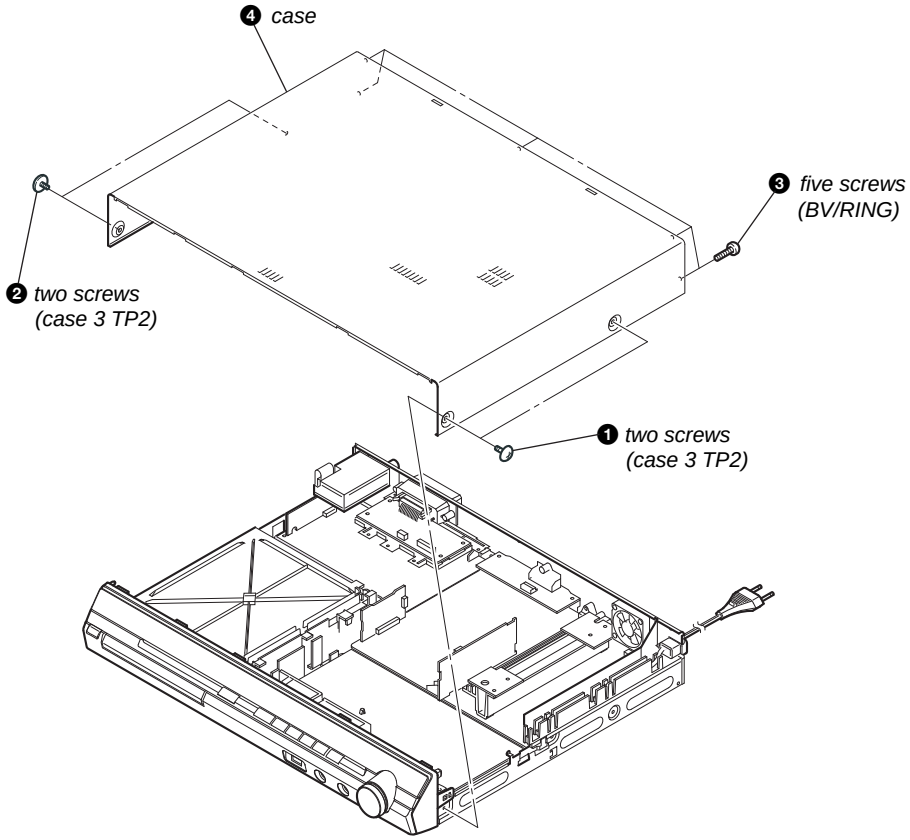


### 3-2. POWER BOARD (DZ860W/DZ870W)

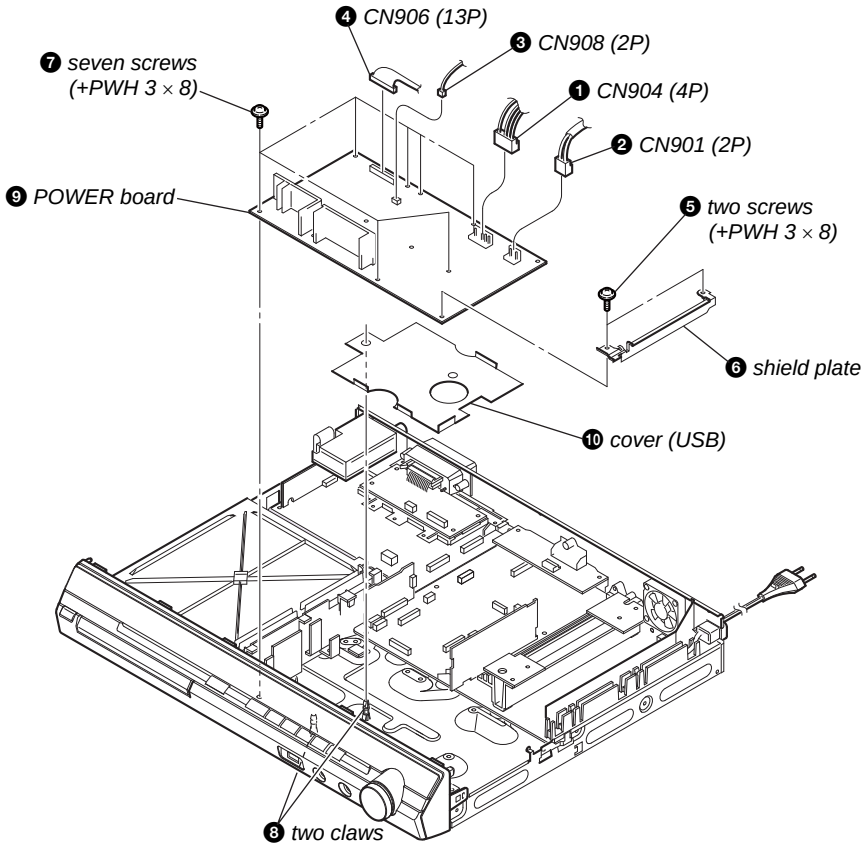

### 3-3. FRONT PANEL SECTION (DZ860W/DZ870W)

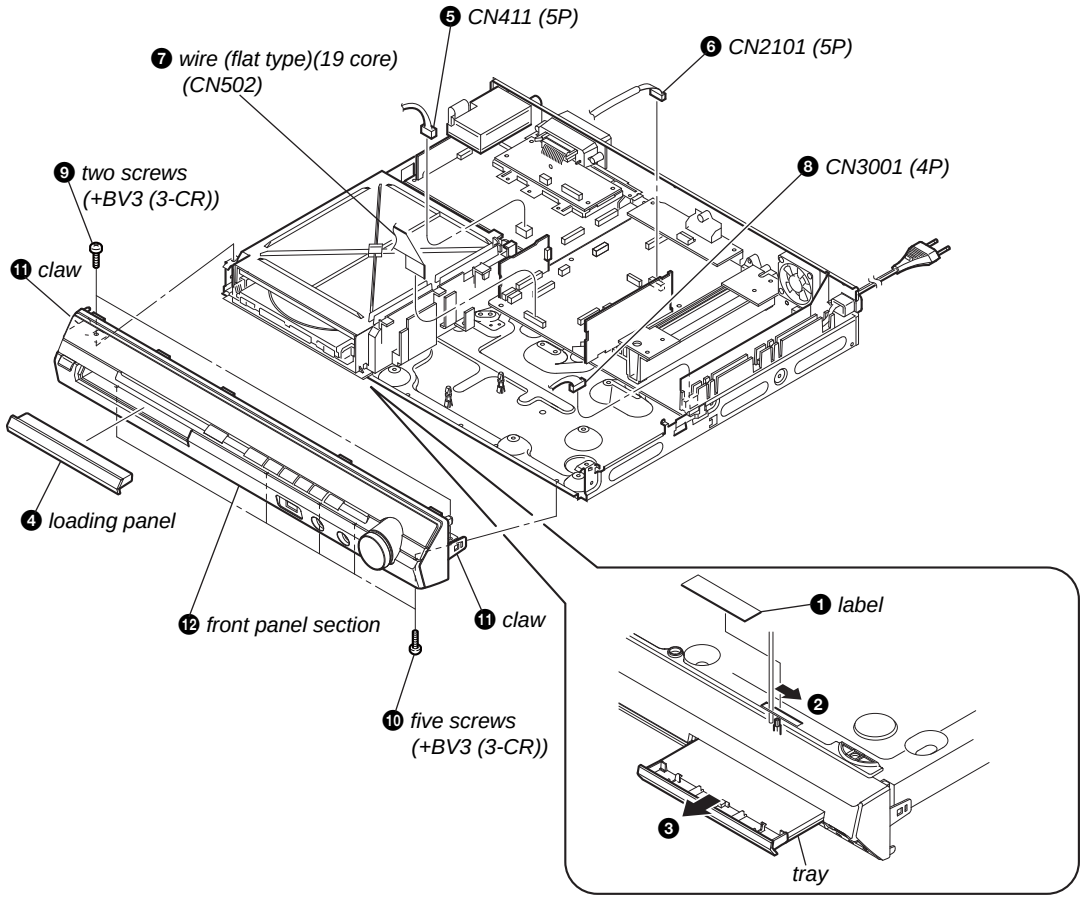


### 3-4. POWER BOARD (DZ870KW/DZ870M)

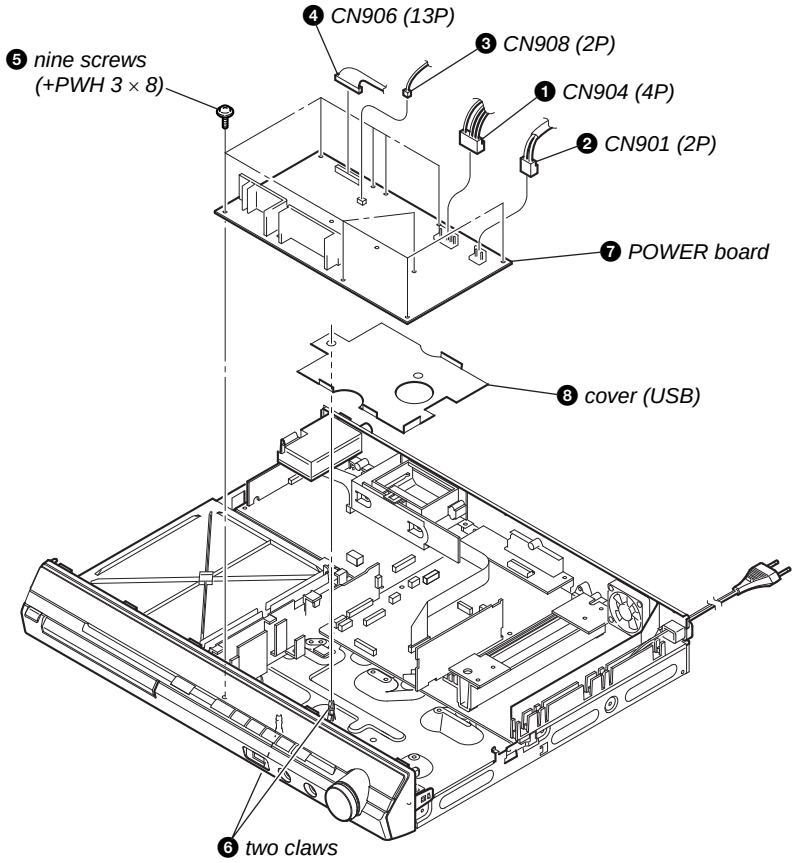

### 3-5. FRONT PANEL SECTION (DZ870KW/DZ870M)

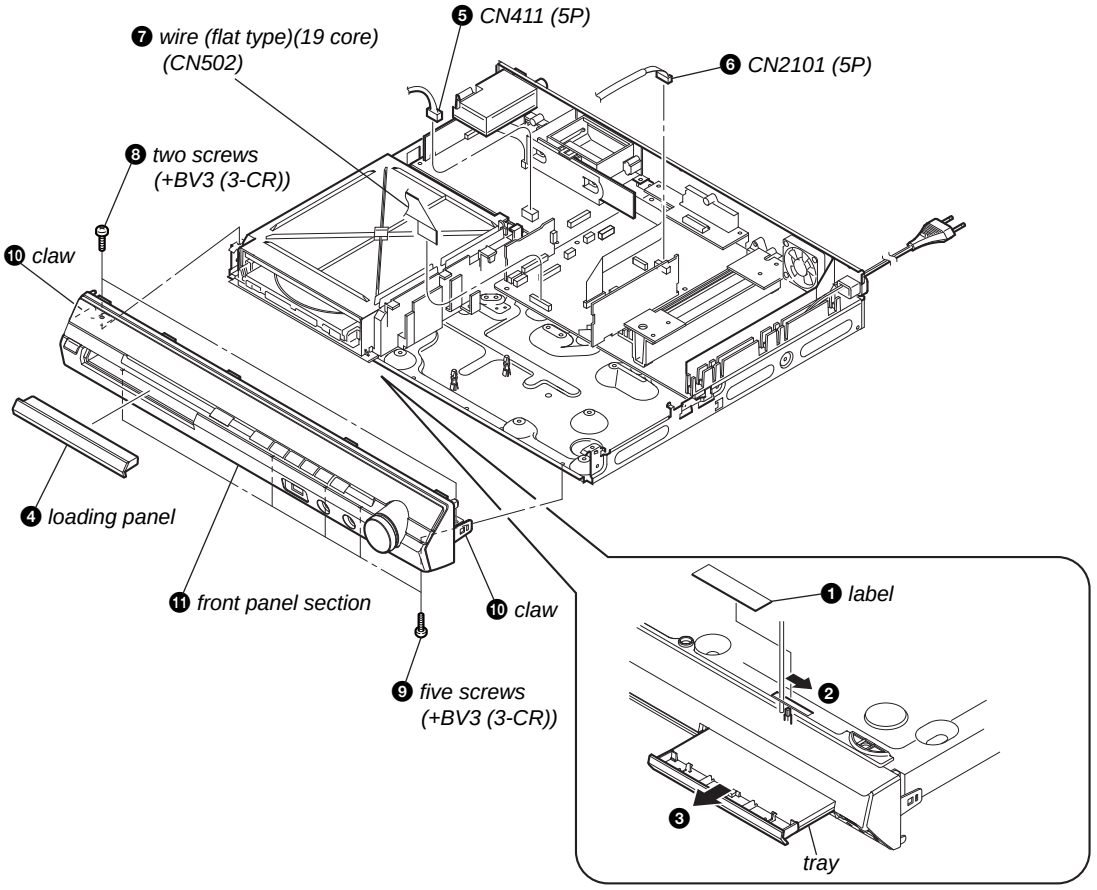


### 3-6. BACK PANEL SECTION (DZ870M)

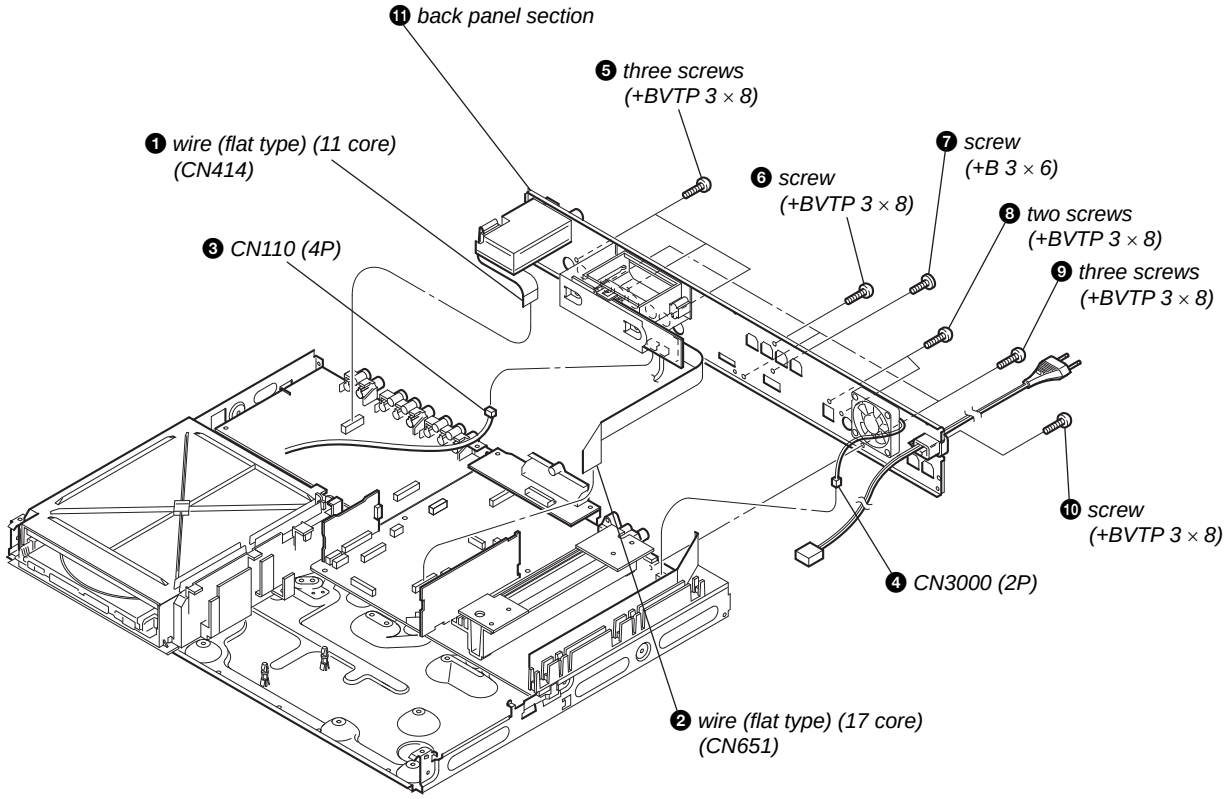

### 3-7. BACK PANEL SECTION (EXCEPT DZ870M)

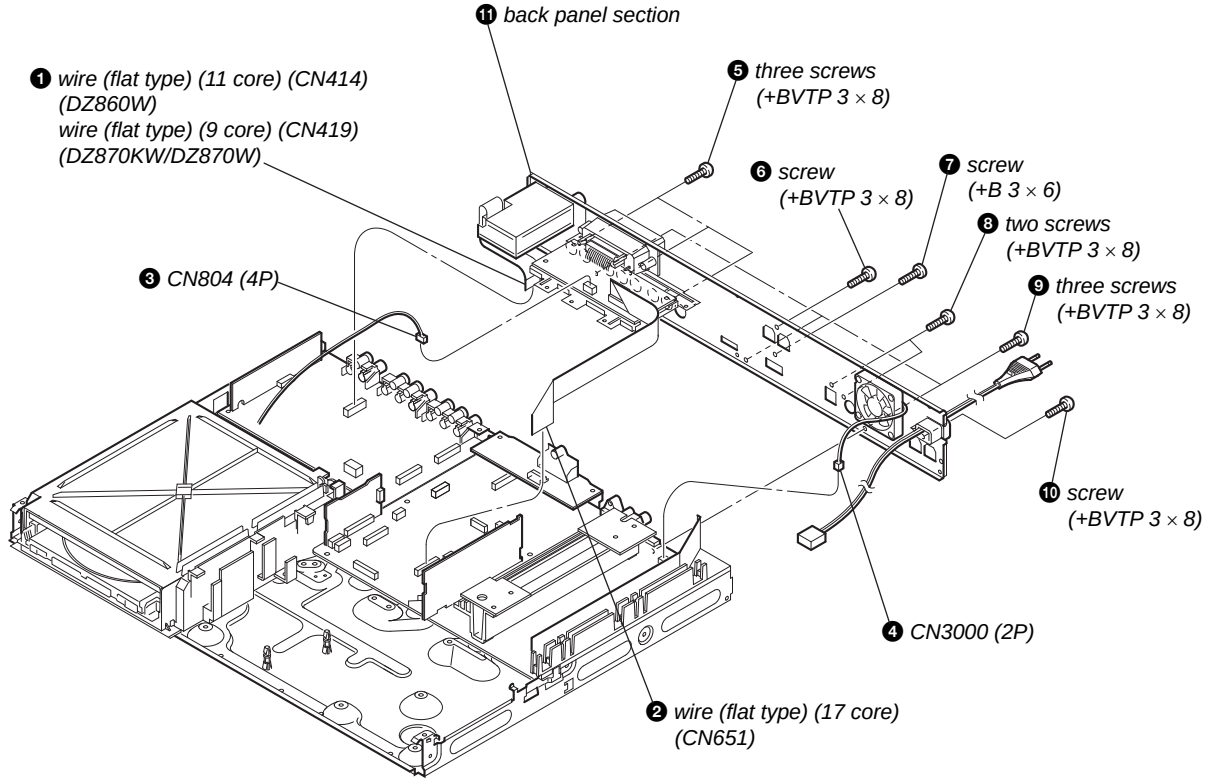


### 3-8. DVD MECHANISM DECK

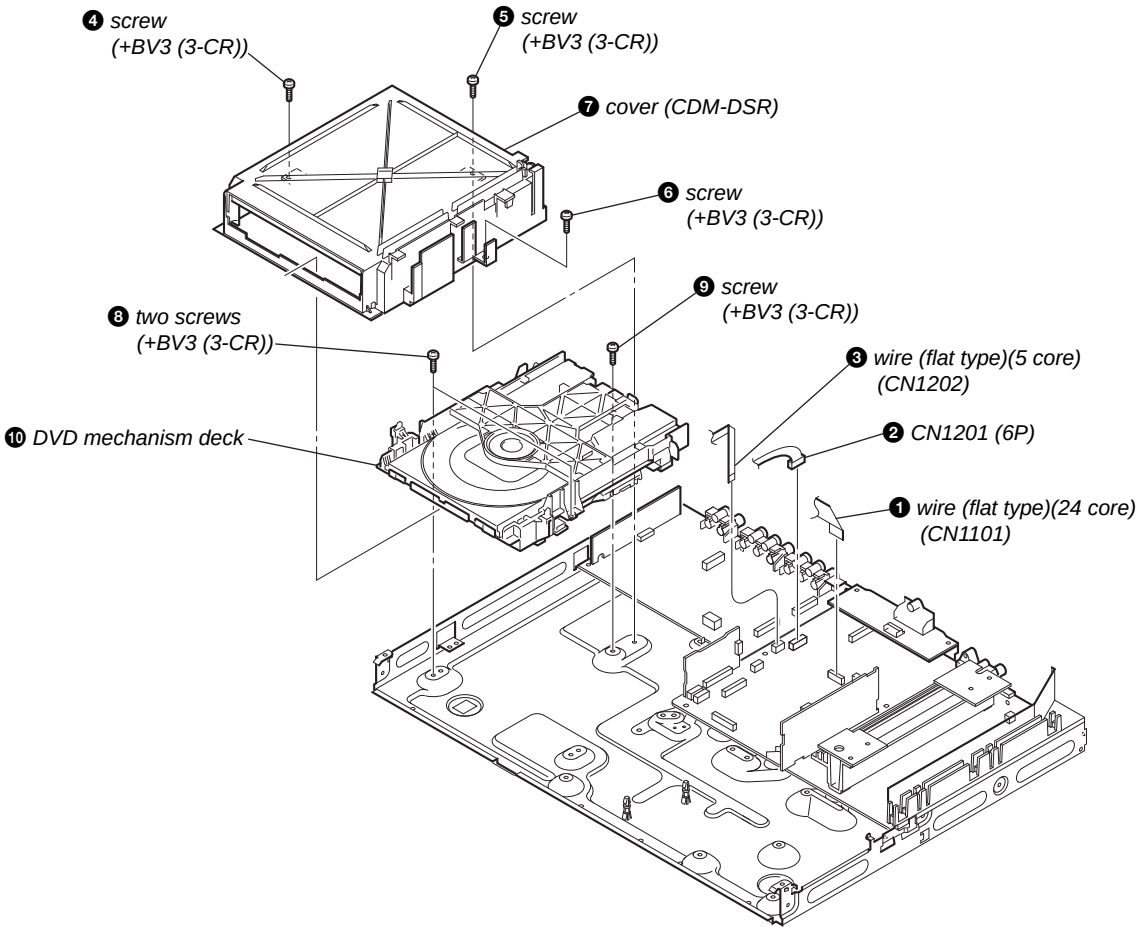

### 3-9. MAIN BOARD

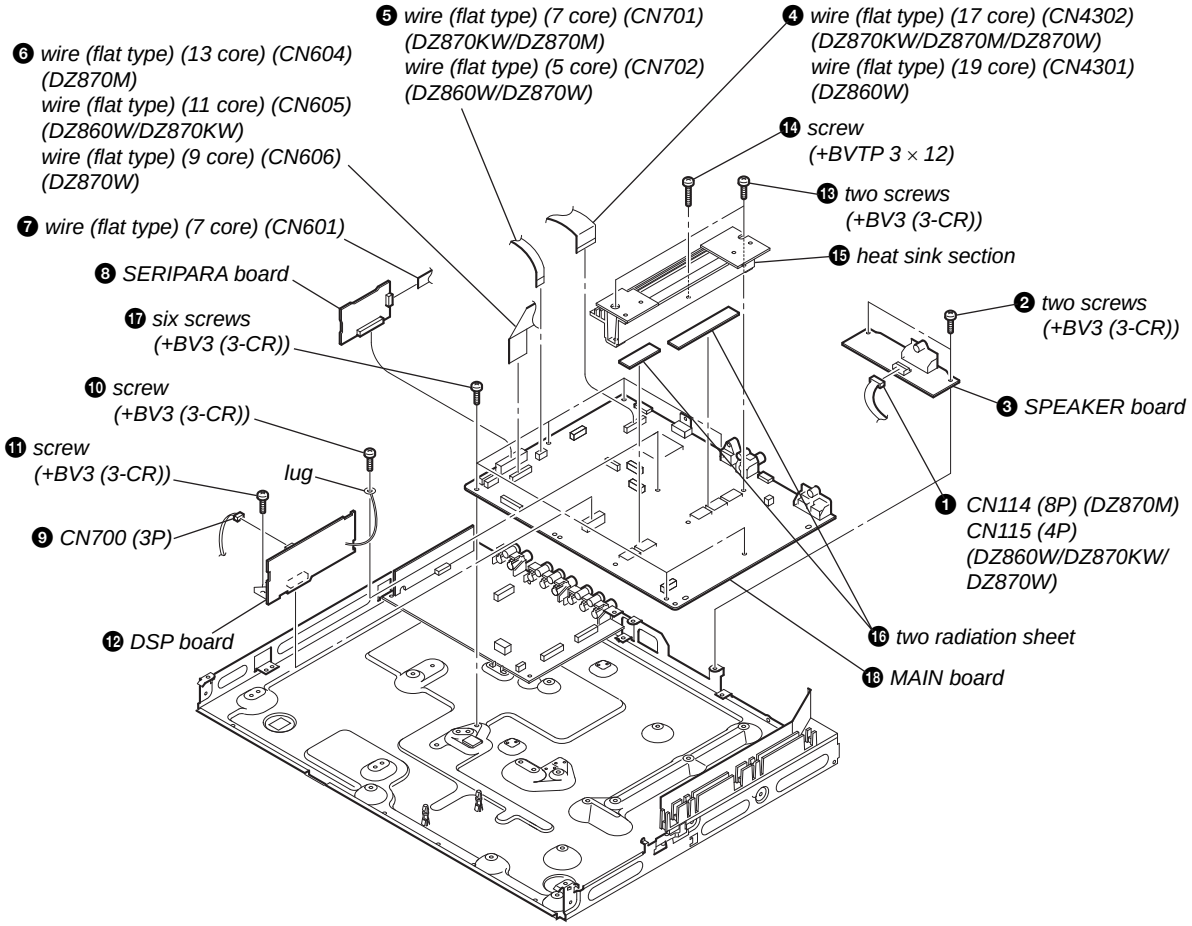


### 3-10. IO-SCART BOARD (DZ860W), IO-COMPONENT BOARD (EXCEPT DZ860W), SCORE BOARD (DZ870KW/DZ870W)

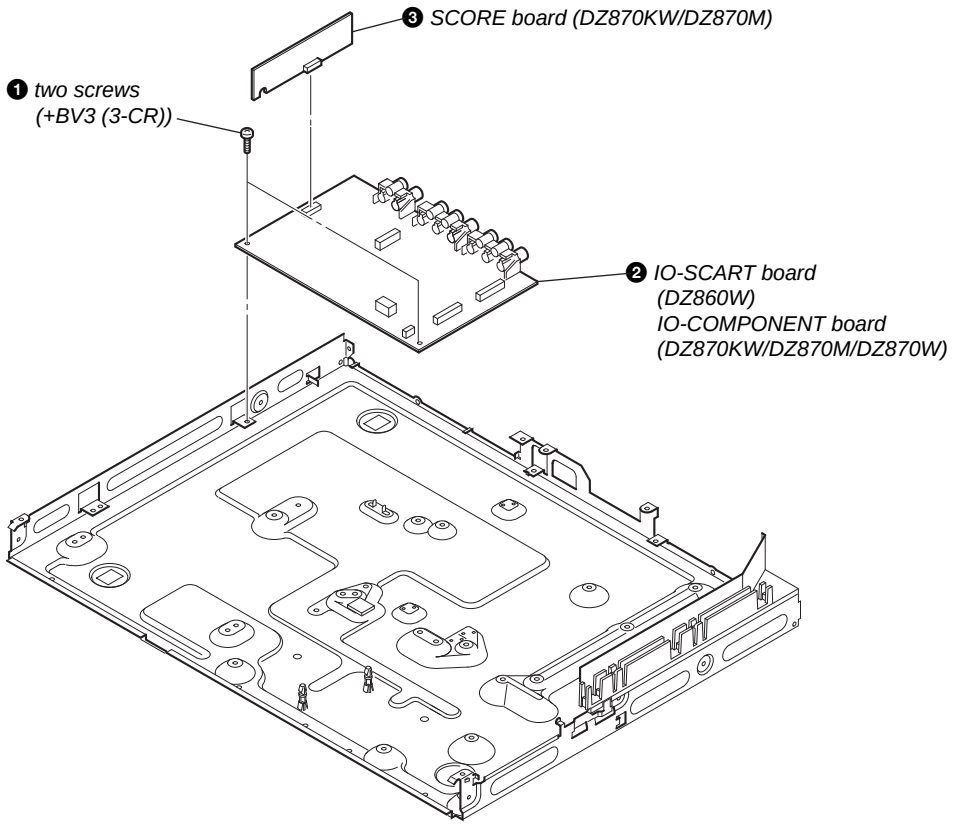

### 3-11. TRAY

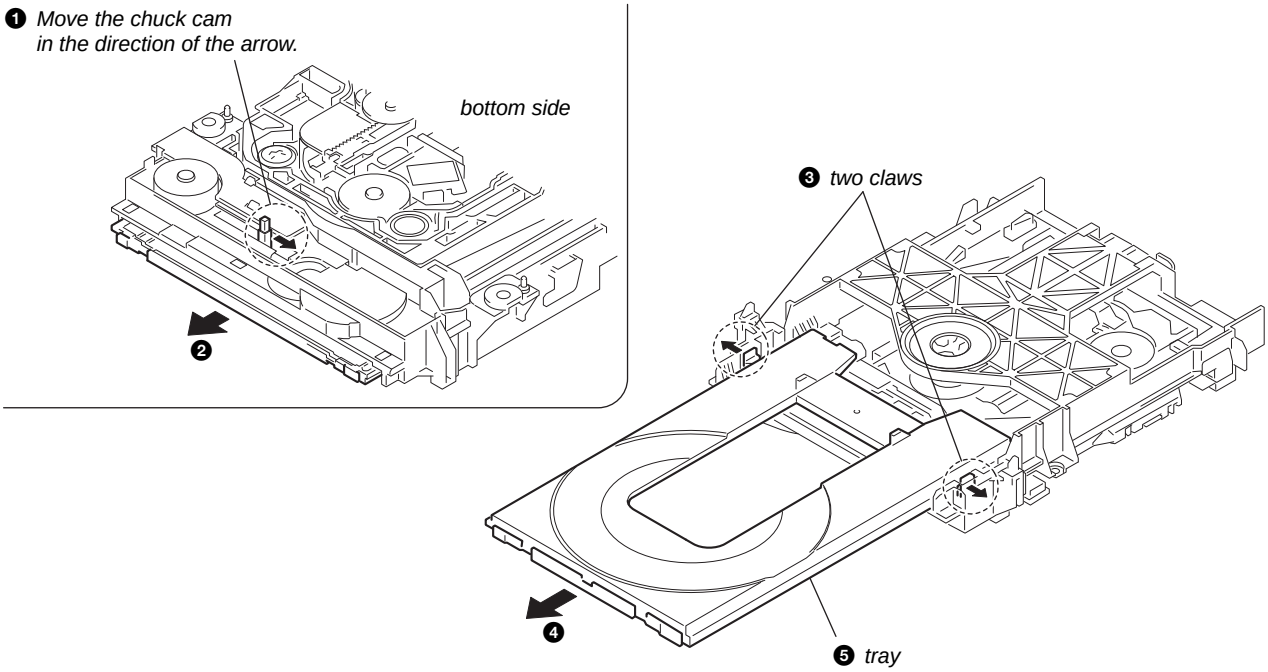


### 3-12. BELT

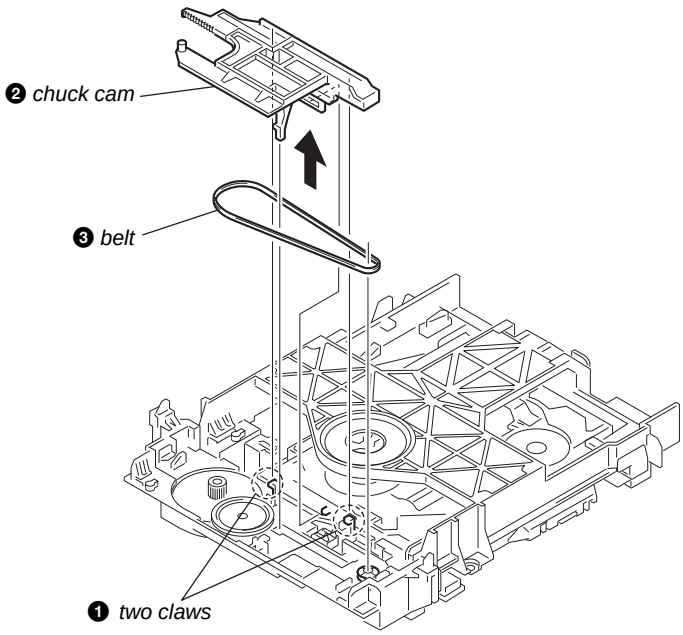

### 3-13. MS-203 BOARD

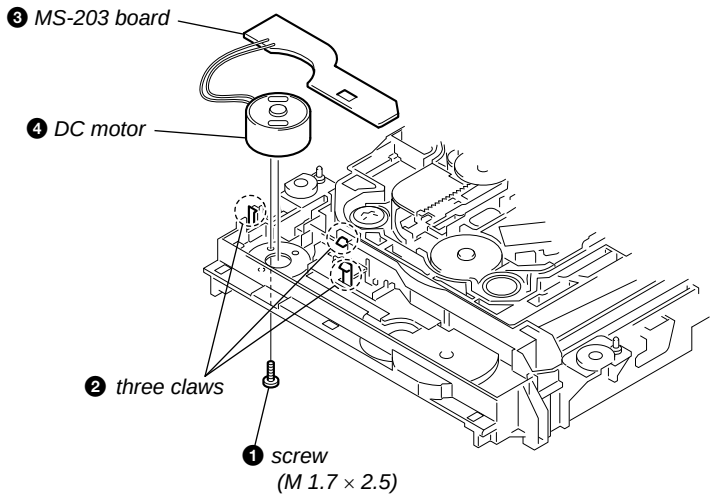


### 3-14. BASE UNIT

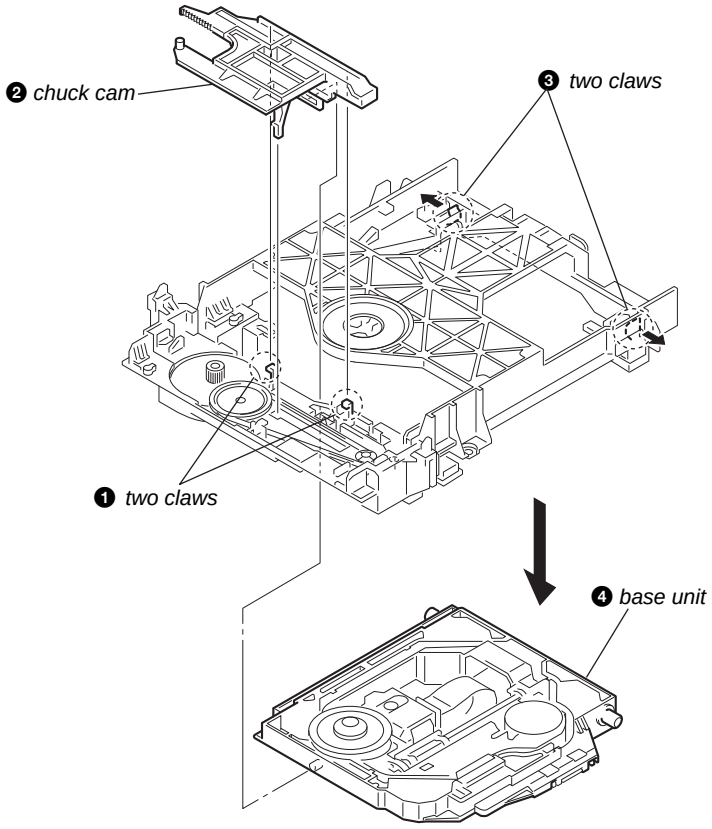

### 3-15. OPTICAL PICK-UP

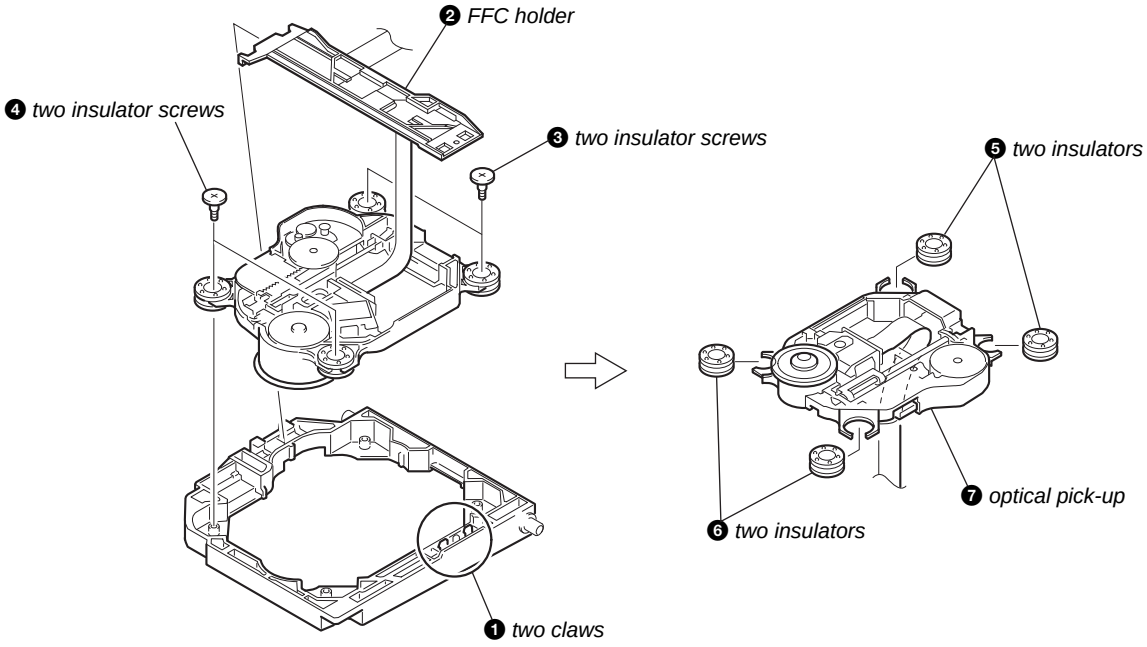

# SECTION 4
# TEST MODE

**Note:** Incorrect operations may be performed if the test mode is not entered properly.
In this case, press the [I/⏻] button to turn the power off, and retry to enter the test mode.

## 1. Cold Reset

- The cold reset clears all data including preset data stored in the RAM to initial conditions. Execute this mode when returning the set to the customers.

**Procedure:**

1. Press the [I/⏻] button to turn the power on.
2. Press three buttons [■], [⏏] and [I/⏻] simultaneously.
3. When this button is operated, display as “COLD RESET” for a while and all of the settings are reset.

## 2. Panel Test Mode

- This mode is used to check the software version, FL and KEY.

### 2-1. Display Test Mode

**Procedure:**

1. Press the [I/⏻] button to turn the power on.
2. Press three buttons [❚❚], [⏮] and [⏏] simultaneously.
3. When the display test mode is activated, all segments are turned on.
4. To exit from this mode, press three buttons [❚❚], [⏮] and [⏏] simultaneously.

### 2-2. Version Test Mode

**Procedure:**

1. When the display test mode is activated, press the [⏮] button and the message “DSR9EW” (DZ860W), “DSR9KW” (DZ870KW), “DSR9KD” (DZ870M), “DSR9W” (DZ870W) are displayed, the version test mode is activated.
2. Whenever the [⏮] button is pressed, the display changes in the following order.

   → “DSR9KW” (Model name) → “ASIA2*1” (Destination) →
   → MC Version → SYS Version → UI Version →
   → DVD Version → ST Version → TA Version →
   → DSP Version → TM Version → MM Version →
   → CLA Version → CEC Version → SAIR Version →

   *1: ASIA2 changes depending on destination.
3. Press the [⏭] button and the date of the software production is displayed.
4. Press the [⏭] button again and the version is displayed.
5. To exit from this mode, press three buttons [❚❚], [⏮] and [⏏] simultaneously.

### 2-3. Key Test Mode

**Procedure:**

1. When the display test mode is activated, press the [▷] button, to select the key test mode.
2. To enter the KEY test mode, the fluorescent indicator displays “K0 V0”. Each time an another button is pressed, “KEY” value increases. However, once a button is pressed, it is no longer taken into account. When all keys are pressed correctly, “K8 V0” is displayed.
3. When the [VOLUME] control is turned in the direction of (+), “V0” is changed to “V1”, then ... “V9”.
   When the [VOLUME] control is turned in the direction of (–), “V0” is changed to “V9”, then ... “V1”.
4. To exit from this mode, press three buttons [❚❚], [⏮] and [⏏] simultaneously.

## 3. Disc Tray Lock

The disc tray lock function for the antitheft of an demonstration disc in the store is equipped.

**Setting Procedure :**

1. Press the [I/⏻] button to turn the set on.
2. Press the [FUNCTION] button to set DVD function.
3. Insert a disc.
4. Press the [■] button and the [⏏] button simultaneously for five seconds.
5. The message “LOCKED” is displayed and the tray is locked.

**Releasing Procedure :**

1. Press the [■] button and the [⏏] button simultaneously for five seconds again.
2. The message “UNLOCKED” is displayed and the tray is unlocked.

**Note:** When “LOCKED” is displayed, the tray lock is not released by turning power on/off with the [I/⏻] button.

## 4. DVD Ship Mode

Use this mode when returning the set to the customer after repair.

**Procedure:**

1. Press the [I/⏻] button to turn the set on.
2. Press the [FUNCTION] button to set the function “DVD”.
3. Remove all Discs, and then press two buttons [▷] and [I/⏻] simultaneously.
4. After a message “MECHA LOCK” ⇦⇨ “PULL PLUG” is displayed on the fluorescent indicator tube, pull out the AC plug.
5. To exit from this mode, press the [I/⏻] button to turn the set on.

## 5. AM Step Change (Except AEP, UK, E models)

- A step of AM channels can be changed over between 9 kHz and 10 kHz.

**Procedure:**

1. Press the [I/⏻] button to turn the set ON.
2. Select the function “TUNER”, and press [FUNCTION] button to select the BAND “AM”.
3. Press the [I/⏻] button to turn the set OFF.
4. Press two buttons [⏭] and [I/⏻] simultaneously, and the display of fluorescent indicator tube changes to “AM 9k STEP” or “AM 10k STEP”, and thus the channel step is changed over.

## 6. Product Out

This mode moves the optical pick-up to the position durable to vibration and clears all data including preset data stored in the RAM to initial conditions. Use this mode when returning the set to the customer after repair.

**Procedure:**

1. Press the [I/⏻] button to turn the power on.
2. Press the [FUNCTION] button to set the function “DVD”.
3. Remove all discs, and then press three buttons [⏭], [⏏] and [I/⏻] simultaneously.
4. After the “STANDBY” blinking display finishes, the message “MECHA LOCK” ⇦⇨ “PULL PLUG” is displayed on the fluorescent indicator tube disconnect the AC power plug, then the ship mode is set.

**DVD SECTION**

## 7-1. GENERAL DESCRIPTION

The IOP measurement allows you to make diagnosis and adjustment simply by using the remote commander and monitor TV. The instructions, diagnosis results, etc. are given on the on-screen display (OSD).
Be sure to execute the IOP measurement when a BU (Base Unit) is replaced.

## 7-2. HOW TO ENTER TEST MODE

While pressing the [■] and [⏏] buttons simultaneously, turn [VOLUME] control in the direction of (+) with the DVD player in power on.
The Test Mode starts, displayed "SERVICE IN" on this model display then the menu shown below will be displayed on the TV screen.

* The display of the "Model Name" of the "Remocon Diagnosis Menu" change with the model and the destination. Refer to below on the model name.

DZ860W : DSR9EW
DZ870KW : DSR9KW
DZ870M : DSR9KD
DZ870W : DSR9W

```
        Remocon Diagnosis Menu

0. External Chip Check
1. Servo Parameter Check
2. Drive Manual Operation
3. Emergency History
4. Version Information


Model Name  : DSR9KW_XX   *1
IF-con      : Ver. XX.XX (XXXX)
Syscon      : Ver. X.XXX
```

*1: Changes depending on destination

The menu above is the Remocon Diagnosis Menu screen which consists of five main functions. At the bottom of the menu screen, the model name and IF-con version. To exit from the Test Mode, press the power button on the remote commander.

## 7-3. EXECUTING IOP MEASUREMENT

In order to execute IOP measurement, the following standard procedures must be followed.

(1) In power on, while pressing the [■] and [⏏] buttons simultaneously, turn the [VOLUME] control in the direction of (+).

```
        Remocon Diagnosis Menu

0. External Chip Check
1. Servo Parameter Check
2. Drive Manual Operation
3. Emergency History
4. Version Information


Model Name  : DSR9KW_XX   *1
IF-con      : Ver. XX.XX (XXXX)
Syscon      : Ver. X.XXX
```

*1: Changes depending on destination

(2) Select "2. Drive Manual Operation" by pressing the [2] button on the remote commander. The screen will appear as shown.

```
        Drive Manual Operation

1. Servo Control
2. Track/Layer Jump
3. Manual Adjustment
4. Tray Aging Mode
5. MIRR time adjust
0. Return to Top Menu
```

(3) Select "3. Manual Adjustment" by pressing the [3] button on the remote commander. The screen will appear as shown.

```
          Manual Adjust

1. Track Balance Adjust:
2. Track Gain Adjust:
3. Focus Balance Adjust:
4. Focus Gain Adjust:
5. Eq Boost Adjust:
6. Iop:
7. TRV. Level:
8. S curve(FE) Level:
9. RFL(PI) Level:
0. MIRR Time:

↑↓ Change Value
[RETURN] Return to previous menu
```

(4) Select "6. IOP" by pressing the [6] button on the remote commander.

(5) Wait until a hexadecimal number appear.

```
          Manual Adjust

1. Track Balance Adjust:
2. Track Gain Adjust:
3. Focus Balance Adjust:
4. Focus Gain Adjust:
5. Eq Boost Adjust:
6. Iop. (4E)
7. TRV. Level:
8. S curve(FE) Level:
9. RFL(PI) Level:
0. MIRR Time:

↑↓ Change Value
[RETURN] Return to previous menu
```

(6) Convert each data from hexadecimal to decimal using conversion table.

(7) Please find the label on the rear of the BU (Base Unit).
The default IOP value is written in the label.

(8) Subtract between these two values.

(9) If the remainder is smaller than 93 (decimal), then it is OK. However if the value is higher than 93, then the BU is defective and need to be change.

(10) Press the [RETURN] button on the remote commander to return back to previous menu.

(11) Press the [0] button on the remote commander to return to Top Menu.

### 7-4. EMERGENCY HISTORY

To check the emergency history, please follow the following procedure.

(1) From the Top Menu of Remocon Diagnosis Menu, select "3. Emergency History Check" by pressing the [3] button on the remote commander. The following screen appears on the on-screen display.

```
                Emg. History Check

Laser Hours        CD     999h        59min
                   DVD    999h        59min

01.  01  05  04  04      00  92  46  00
     00  00  00  00      00  00  23  45
02.  02  02  01  01      00  A9  4B  00
     00  00  00  00      00  00  23  45

[Next]   Next Page    [Prev]  Prev Page
[O]  Return to Top Menu
```

(2) You can check the total time when the laser is turned on during playback of DVD and CD from the above menu. The maximum time, which can be displayed are 999h 59min.

(3) You can check the error code of latest 10 emergency history from the above menu. To view the previous or next page of emergency history, press [I◄◄ ] or [►►I] button on the remote commander. The error code consists of the following three blocks. The first block indicates the error code. The second block indicates the parameter and the third block indicates the time of error code as shown below.

**• Error Code**

```
                Emg. History Check

Laser Hours        CD     999h        59min
                   DVD    999h        59min

     *1  *2
01.  01  05  04  04      00  92  46  00
     00  00  00  00      00  00  23  45 *3
02.  02  02  01  01      00  A9  4B  00
     00  00  00  00      00  00  23  45

[Next]   Next Page    [Prev]  Prev Page
[O]  Return to Top Menu
```

*1 : Error Code
*2 : Parameter of error code
*3 : Time of error code

**The meaning of error code is as below:**

01: Communication error (No reply from syscon)
02: Syscon hung up
03: Power OFF request when syscon hung up
19: Thermal shutdown
24: MoveSledHome error
25: Mechanical move error (5 Changer)
26: Mechanical move stack error
30: DC motor adjustment error
31: DPD offset adjustment error
32: TE balance adjustment error
33: TE sensor adjustment error
34: TE loop gain adjustment error
35: FE loop gain adjustment error
36: Bad jitter after adjustment
40: Focus NG
42: Focus layer jump NG
52: Open kick spindle error
51: Spindle stop error
60: Focus on error
61: Seek fail error
62: Read Q data/ID error
70: Lead in data read fail
71: TOC read time out (CD)
80: Can't buffering
81: Unknown media type

#### 7-4-1. Clear the Laser Hour

Press [▭ DISPLAY] button and then press [CLEAR] button on the remote commander. The data for both CD and DVD data are reset.

```
                Emg. History Check

Laser Hours        CD     0h          0min
                   DVD    0h          0min

01.  01  05  04  04      00  92  46  00
     00  00  00  00      00  00  23  45
02.  02  02  01  01      00  A9  4B  00
     00  00  00  00      00  00  23  45

[Next]   Next Page    [Prev]  Prev Page
[O]  Return to Top Menu
```

#### 7-4-2. Clear the Emergency History

Press [DVD TOP MENU] button and then press [CLEAR] button on the remote commander. The error code for all emergency history would be reset.

```
                Emg. History Check

Laser Hours        CD     999h        59min
                   DVD    999h        59min

01.  00  00  00  00      00  00  00  00
     00  00  00  00      00  00  00  00
02.  00  00  00  00      00  00  00  00
     00  00  00  00      00  00  00  00

[Next]   Next Page    [Prev]  Prev Page
[O]  Return to Top Menu
```

#### 7-4-3. Clear the Initialize Setup Data

Press [DVD MENU] button and then press [CLEAR] button on the remote commander.

```
                Emg. History Check

Laser Hours        CD     999h        59min
                   DVD    999h        59min

              initialize setup data...




[Next]   Next Page    [Prev]  Prev Page
[O]  Return to Top Menu
```

### 7-4-4. Return to the Top Menu of Remocon Diagnosis Menu

Press [0] button on the remote commander.

**• Check Version Information**

To check the version information, please follow the following procedure.

(1) From the Top Menu of Remocon Diagnosis Menu, select "4. Version Information" by pressing the [4] button on the remote commander. The following screen appears on the on-screen display.

```
Version information

Firm (Main) :  Ver. xxxxx
Firm (Sub) :  xxxxx
RISC :  xxxxx
8032 :  xxxxx
Audio DSP :  xxxxx
Servo DSP :  xxxxx

[O]  Return to Top Menu
```

To return to the Top Menu of Remocon Diagnosis Menu, press [0] button on the remote commander.

### 7-5. AUTOMATIC ACOUSTIC FIELD CALIBRATION MICROPHONE TEST MODE

**Procedure:**

1. Press the [I/⏻] button to turn the power on.
2. Press the [FUNCTION] button to set the function " DVD".
3. Insert ECM-AC2 supplied as an accessory into the AUDIO IN/ A.CAL MIC jack.
4. While pressing the [▮▮] and [⏏] buttons simultaneously, turn the [VOLUME] control in the direction of (+).
5. Confirm that the following are shown on the display panel.
   ① The JACK inserted/non-inserted detection display and the STEREO/MONO detection display.

```
JACK  ＊＊＊＊
      ①
```

① "NON" : Not detected
"MN" : STEREO
"MONO" : MONO

6. To exit from this mode, press the [▮▮] and [⏏] buttons simultaneously, turn the [VOLUME] control in the direction of (+).

### 8. DEMO PLAY OUT

It is a mode to release the demonstration reproduct by the dedicated demonstration disc.

1. During playback the DEMO Disc, press the [■] and [▷] buttons for five seconds simultaneously.
2. The message "DEMO OFF" is displayed, a mode to reproduct the demonstration is released.

### 9. DIGITAL MEDIA PORT TEST

1. Connect the DMPORT CHECK JIG (P/N: J-2501-309-A) with the terminal DMPORT.
2. Press the [I/⏻] button to turn the power on.
3. Confirm that both LEDs of the DMPORT confirmation JIG lights. (Confirmation the power supply line.)
4. Set the [FUNCTION] button with "DMPORT" on this model.
5. Press the [▮▮], [⏮] buttons and turn the [VOLUME] control in the direction of (+) simultaneously, the DMPORT test mode is activated.
6. It is confirmed that "DMPORT OK" is displayed on this set display. (Confirmation of communication line)
7. To a pin jack of the DMPORT confirmation JIG input information relevant to audio signal (sine-wave 1.0Vrms) and composite video signal (white 100% 1.0Vp-p, color bar, etc.)
8. Confirm the output of speakers and monitor TV. (Confirmation of analog signal)
9. To exit from this mode, press the [▮▮], [⏮] buttons and turn the [VOLUME] control in the direction of (+).

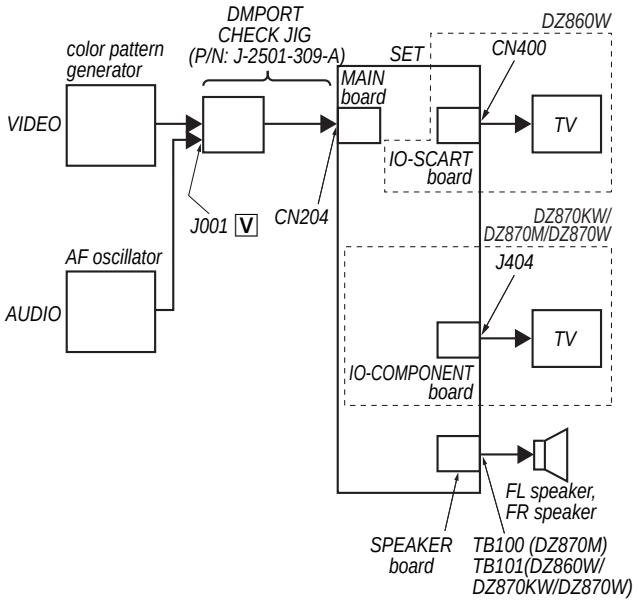

## 10. PROTECTION FACTOR (SD DETECTION/ DC DETECTION) IDENTIFICATION TEST MODE

When an error is detected, the FL tube alternately displays "PROTECTOR ⇦⇨ PUSH POWER".

↓ Press the [I/⏻] button.
* Buttons other than the [I/⏻] button are invalid.

"STANDBY" blinks three times on the FL tube.

↓

The protection release state (POWER OFF) is established.
(No FL tube display)

↓ Press the [I/⏻] button two times.

The power to the system turns on, and the normal operation is established. (Restore)

**During the protection state:**

1. If the AC plug is connected or disconnected during the protection state, the protection state is released, and the normal operation is established. (The protection state is not maintained.)
2. The protection factor is displayed by pressing the [FUNCTION], [⏏] and [▶▶I] buttons at the same time during the protection state
   (during the "PROTECTOR ⇦⇨ PUSH POWER" display).
   ⇨ When SD is detected: Repeats
   "SD DETECT ⇦⇨ PROTECTOR".
   ⇨ When DC is detected: Repeats
   "DC DETECT ⇦⇨ PROTECTOR".

**PL: SD detection**

When the "L" output from the SD (shutdown) port on the S-MASTER POWER Driver Shutdown and voltage descent (15V or less) of 30V power supply (PVDD) are detected.

**DC detection**

When the "L" output from the power/speaker error detection circuit (DC detection port) is detected for two seconds continually, the power system other than that of the FL tube is turned off, and the protection state is established.

# SECTION 5
# ELECTRICAL ADJUSTMENTS

## DVD SECTION

When the optical pick-up assy is replaced, perform the "EXECUTING IOP MEASUREMENT".

EXECUTING IOP MEASUREMENT (See page 33)

## TUNER SECTION

**[FM Tune Level Check]**

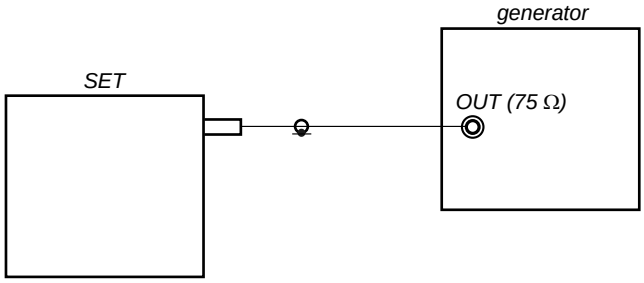


**Procedure:**

1. Turn the power on.
2. Input the following signal from Signal Generator to FM antenna input directly.

* Carrier Freq : A = 87.5 MHz, B = 98 MHz, C = 108 MHz
Deviation : 75 kHz
Modulation : 1 kHz
ANT input : 35 dBu (EMF)

**Note:** Please use 75 ohm "coaxial cable" to connect SG and the set. You cannot use video cable for checking.
Please use SG whose output impedance is 75 ohm.

3. Set to FM tuner function and tune A, B and C signals.
4. Confirm "TUNED" is lit on the display for A, B and C signals.

The mark of "TUNED" means "The selected station signal is received in good condition."

# SECTION 6
# DIAGRAMS

**THIS NOTE IS COMMON FOR PRINTED WIRING BOARDS AND SCHEMATIC DIAGRAMS.**
**(In addition to this, the necessary note is printed in each block.)**

### For Printed Wiring Boards.

**Note:**

- ○——— : Parts extracted from the component side.
- ○ : Through hole.
- ▬ : Pattern from the side which enables seeing.
  (The other layers' patterns are not indicated.)

| **Caution:** | |
|---|---|
| Pattern face side: (SIDE B) | Parts on the pattern face side seen from the pattern face are indicated. |
| Parts face side: (SIDE A) | Parts on the parts face side seen from the parts face are indicated. |

- Indication of transistor.

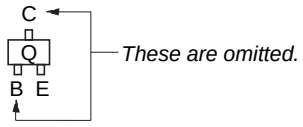


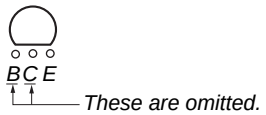


- Abbreviation
  AUS : Australian model
  E3 : 240V AC area in E model
  E15 : Iran model
  E32 : 110-240V AC area in E model
  EA : Saudi Arabia model
  KR : Korean model
  MX : Mexican model
  RU : Russian model
  SP : Singapore model
  TH : Thai model
  TW : Taiwan model

### For Schematic Diagrams.

**Note:**

- All capacitors are in μF unless otherwise noted. (p: pF) 50 WV or less are not indicated except for electrolytics and tantalums.
- All resistors are in Ω and 1/4 W or less unless otherwise specified.
- △ : internal component.
- ▭ : panel designation.

**Note:** The components identified by mark ⚠ or dotted line with mark ⚠ are critical for safety.
Replace only with part number specified.

- ▬▬ : B+ Line.
- ▬ ▬ ▬ : B– Line.
- Voltages and waveforms are dc with respect to ground under no-signal (detuned) conditions.
- Voltages and waveforms are dc with respect to ground in service mode.
- Waveforms are taken with a oscilloscope.
  Voltage variations may be noted due to normal production tolerances.
  no mark : TUNER (FM)
  < > : DVD PLAY
  ∗ : Impossible to measure
- Voltages are taken with VOM (Input impedance 10 MΩ).
- Circled numbers refer to waveforms.
- Signal path.
  ⇨ : TUNER
  ⇨ : DVD PLAY
  ⇨ : VIDEO
  ⇨ : Y
  ⇨ : CHROMA
  ⇨ : COMPONENT VIDEO
  ▷ : MIC
- Abbreviation
  AUS : Australian model
  E3 : 240V AC area in E model
  E15 : Iran model
  E32 : 110-240V AC area in E model
  EA : Saudi Arabia model
  KR : Korean model
  MX : Mexican model
  RU : Russian model
  SP : Singapore model
  TH : Thai model
  TW : Taiwan model

## • Circuit Boards Location

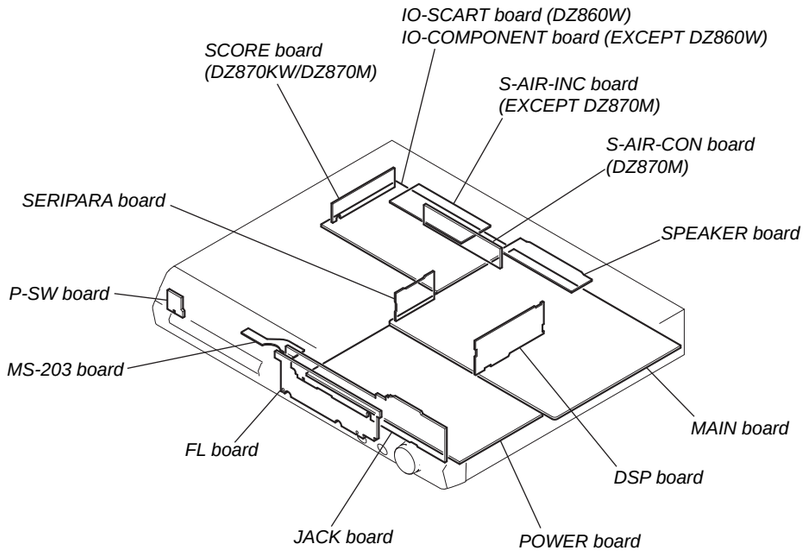


## • Waveforms
### – MAIN Board –

**① IC1101 ⑩ (DVDRFIP)**

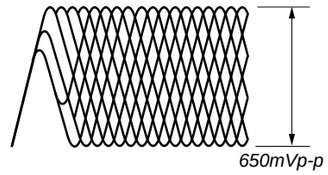


200 mV/DIV, 100 ns/DIV

**② IC1101 ⑱② (R/Cr/Pr)**

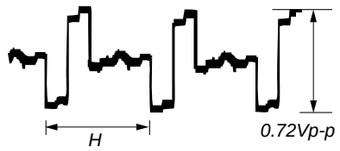


500 mV/DIV, 20 µs/DIV

**③ IC1101 ⑱③ (B/Cb/Pb)**

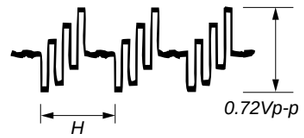


500 mV/DIV, 20 µs/DIV

**④ IC1101 ⑱⑤ (Y/G)**

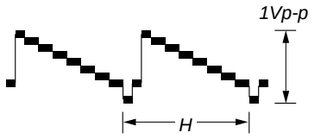


1 V/DIV, 20 µs/DIV

**⑤ IC1101 ⑱⑨ (C)**

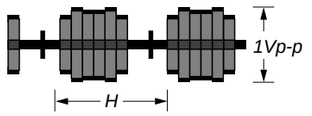


1 V/DIV, 20 µs/DIV

**⑥ IC1101 ⑲① (Y)**

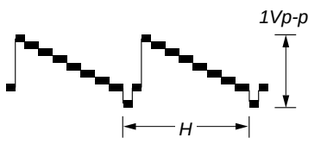


1 V/DIV, 20 µs/DIV

**⑦ IC1101 ㉓⑧ (XTALO)**

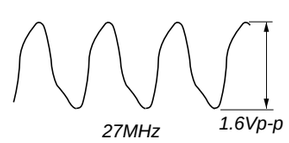


500 mV/DIV, 20 ns/DIV

**⑧ IC501 ⑬ (Xout)**

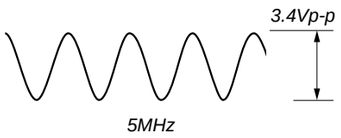


1 V/DIV, 100 ns/DIV

**⑨ IC702 ㉑ (XOUT (O))**

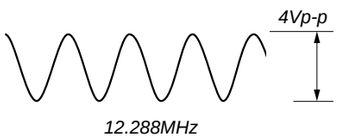


1 V/DIV, 20 ns/DIV

**⑩ IC3010 ⑭ (XFSOOUT)**

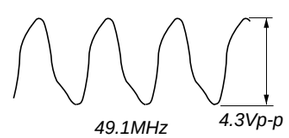


1 V/DIV, 10 ns/DIV

**⑪ IC3010 ㊽ (XFSOIN)**

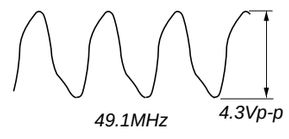


1 V/DIV, 10 ns/DIV

**⑫ IC3051 ② (3Y)**

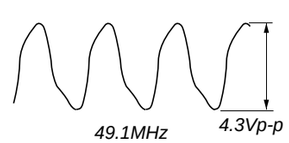


1 V/DIV, 10 ns/DIV

## – IO-SCART Board (DZ860W) –

### ① IC400 ② (Cin)

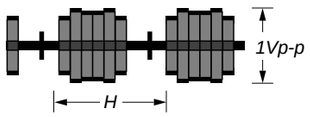


1 V/DIV, 20 µs/DIV

### ② IC400 ⑥ (Yin)

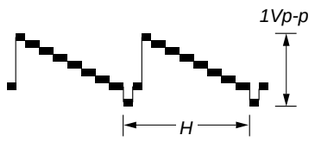


1 V/DIV, 20 µs/DIV

### ③ IC400 ⑩ (CVin)

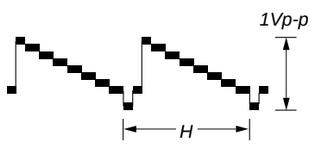


1 V/DIV, 20 µs/DIV

### ④ IC400 ⑫ (Cbin)

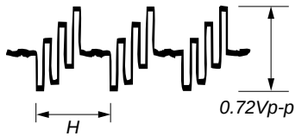


500 mV/DIV, 20 µs/DIV

### ⑤ IC400 ⑭ (Crin)

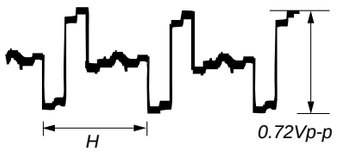


500 mV/DIV, 20 µs/DIV

### ⑥ IC400 ㉓ (CVBSout)

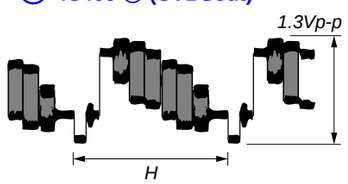


500 mV/DIV, 20 µs/DIV

## – IO-COMPONENT Board (DZ870KW/DZ870M/DZ870W) –

### ① IC404 ② (Cin)

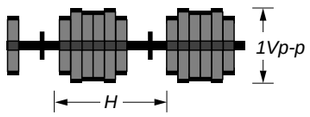


1 V/DIV, 20 µs/DIV

### ② IC404 ⑥ (Yin)

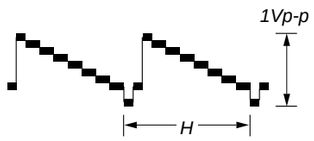


1 V/DIV, 20 µs/DIV

### ③ IC404 ⑩ (CYin)

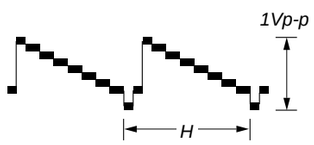


1 V/DIV, 20 µs/DIV

### ④ IC404 ⑫ (Cb in)

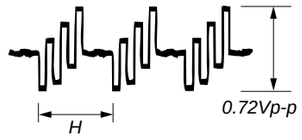


500 mV/DIV, 20 µs/DIV

### ⑤ IC404 ⑭ (Cr in)

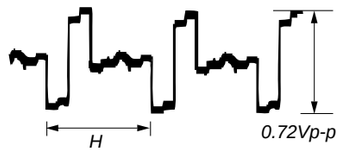


500 mV/DIV, 20 µs/DIV

### ⑥ IC404 ⑯ (Cr OUT)

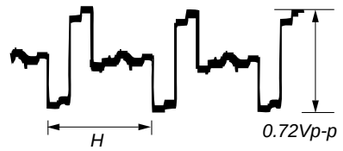


500 mV/DIV, 20 µs/DIV

### ⑦ IC404 ⑱ (Cb OUT)

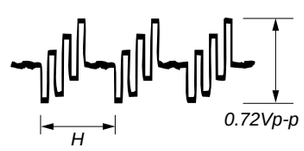


500 mV/DIV, 20 µs/DIV

### ⑧ IC404 ⑳ (CY OUT)

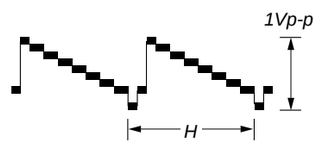


1 V/DIV, 20 µs/DIV

### ⑨ IC404 ㉓ (CVBS OUT)

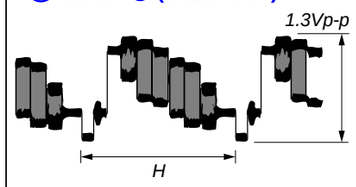


500 mV/DIV, 20 µs/DIV

## – S-AIR-INC Board –

### ① IC802 ⑤ (2Y)

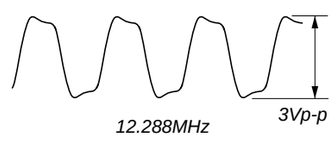


1 V/DIV, 20 ns/DIV

### ② IC805 ⑦ (LRCK)

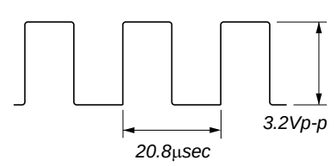


1 V/DIV, 10 µs/DIV

### ③ IC805 ⑧ (BCK)

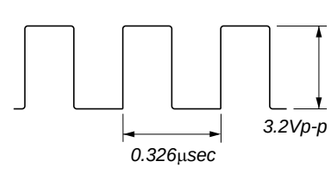


1 V/DIV, 0.1 µs/DIV

### ④ IC803 ⑤ (BCKI)<br>IC804 ⑤ (BCKI)

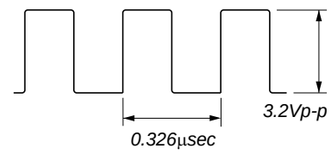


1 V/DIV, 0.1 µs/DIV

### ⑤ IC803 ⑥ (LRCKI)<br>IC804 ⑥ (LRCKI)

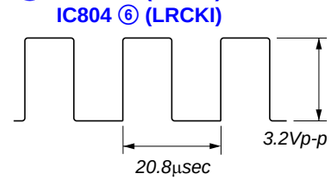


1 V/DIV, 10 µs/DIV

### ⑥ IC803 ⑬ (RST)<br>IC804 ⑬ (RST)

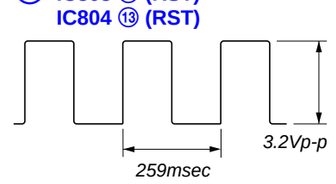


1 V/DIV, 50 ms/DIV

## – DSP Board –

### ① IC700 ⑭ (XTAL)

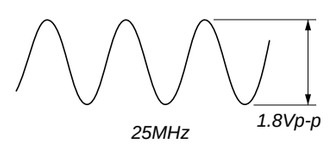


0.5 V/DIV, 10 ns/DIV

## 6-1. BLOCK DIAGRAM – RF Section –

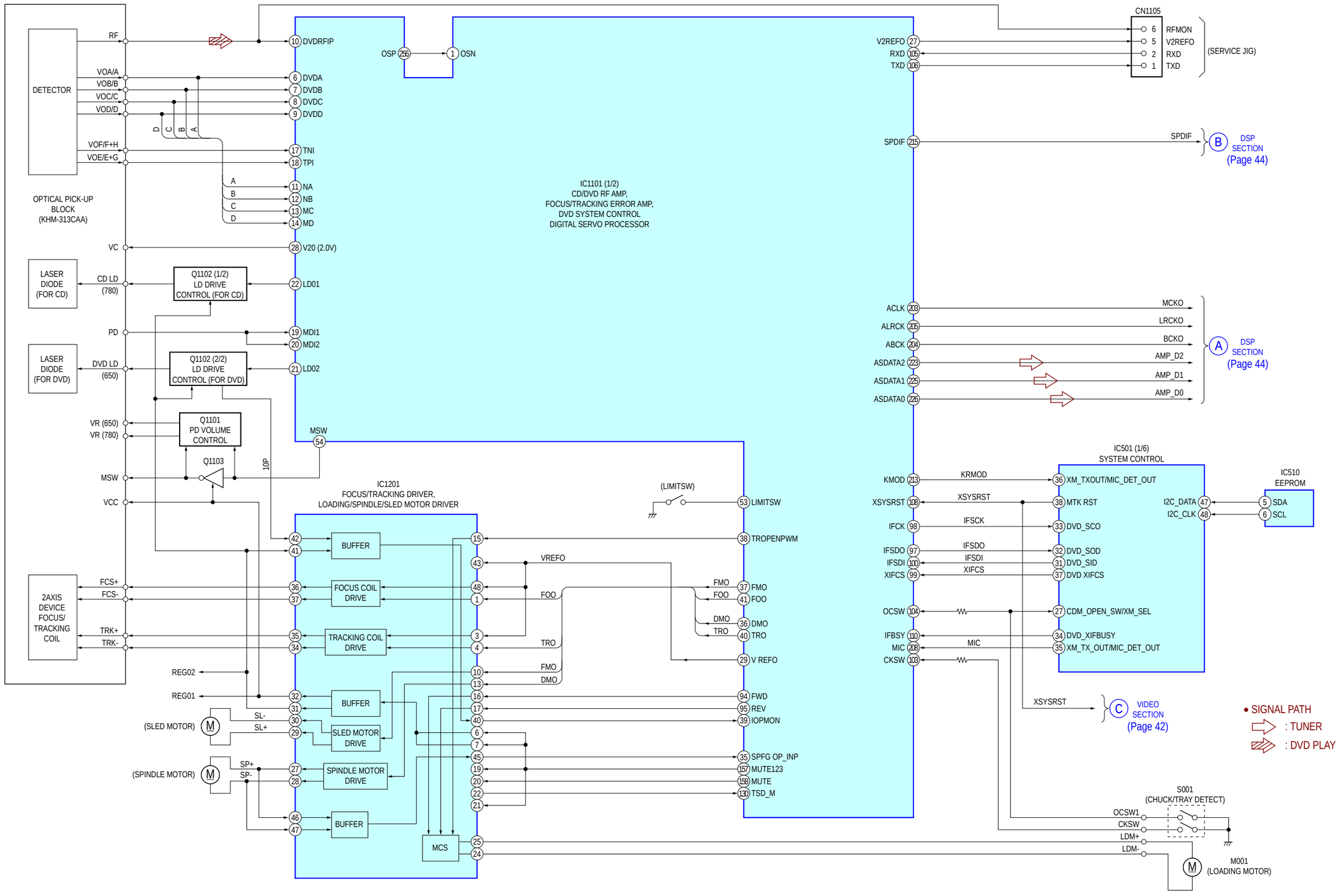

## 6-2. BLOCK DIAGRAM – VIDEO Section –

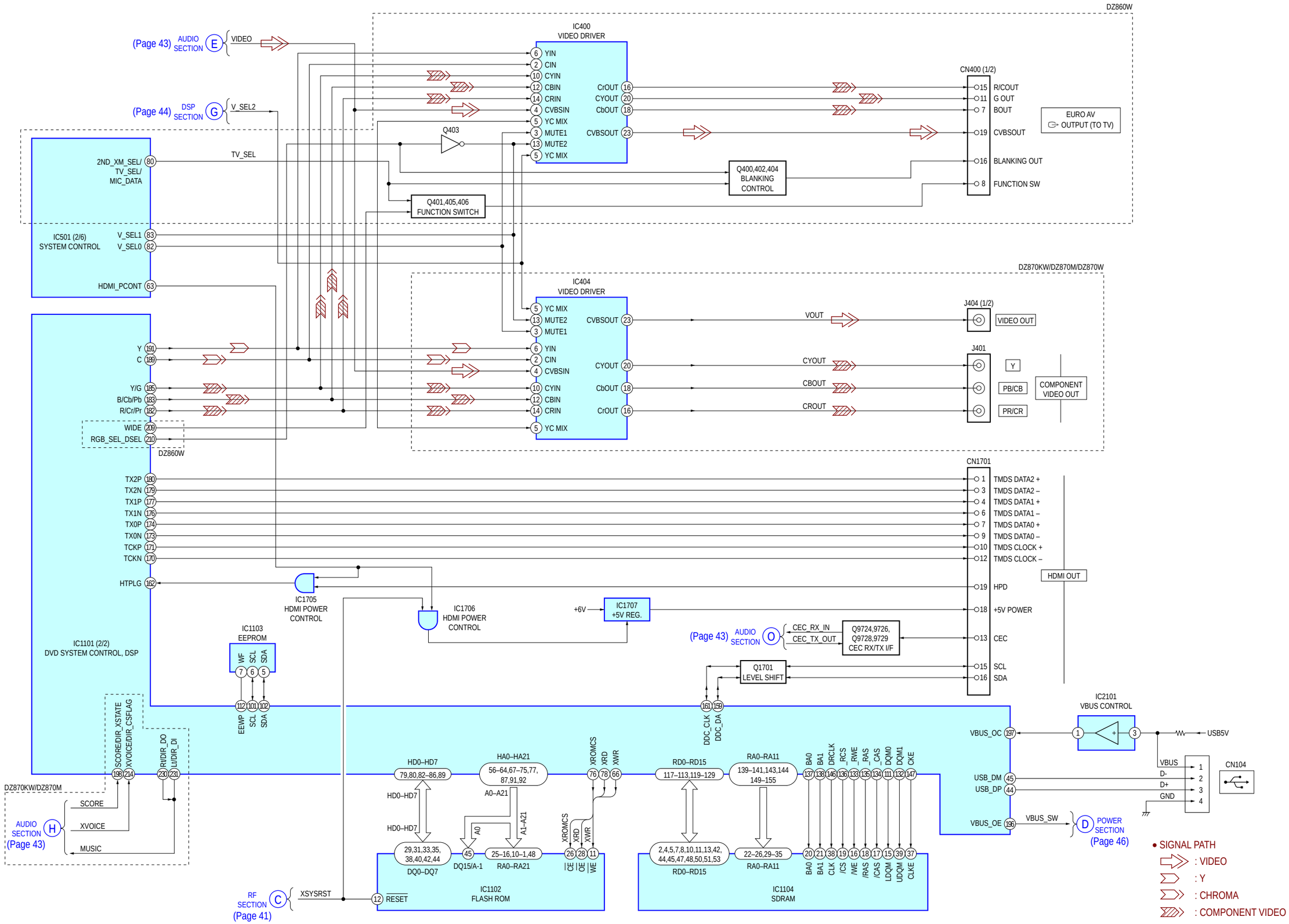

## 6-3. BLOCK DIAGRAM – AUDIO Section –

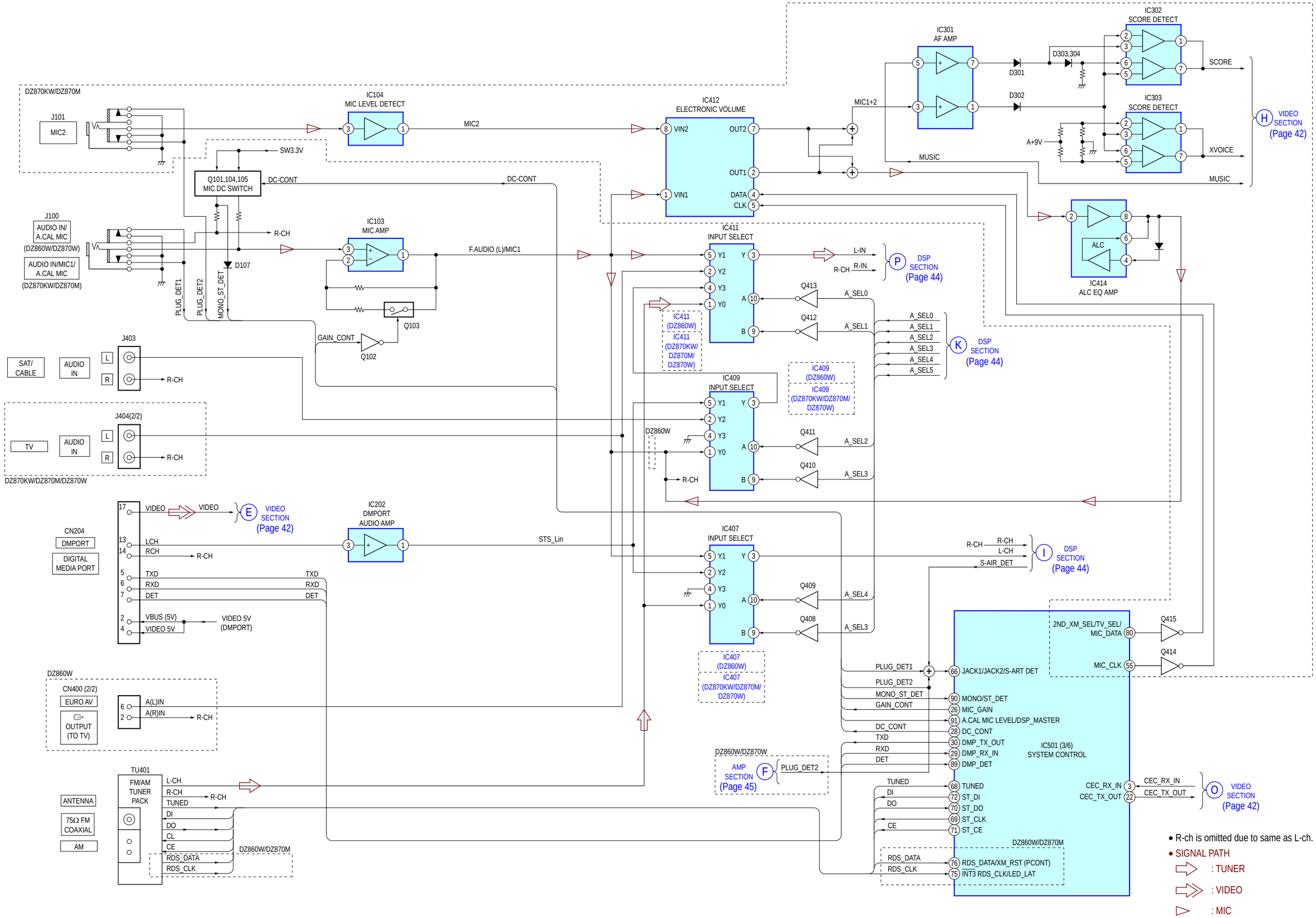

## 6-4. BLOCK DIAGRAM – DSP Section –

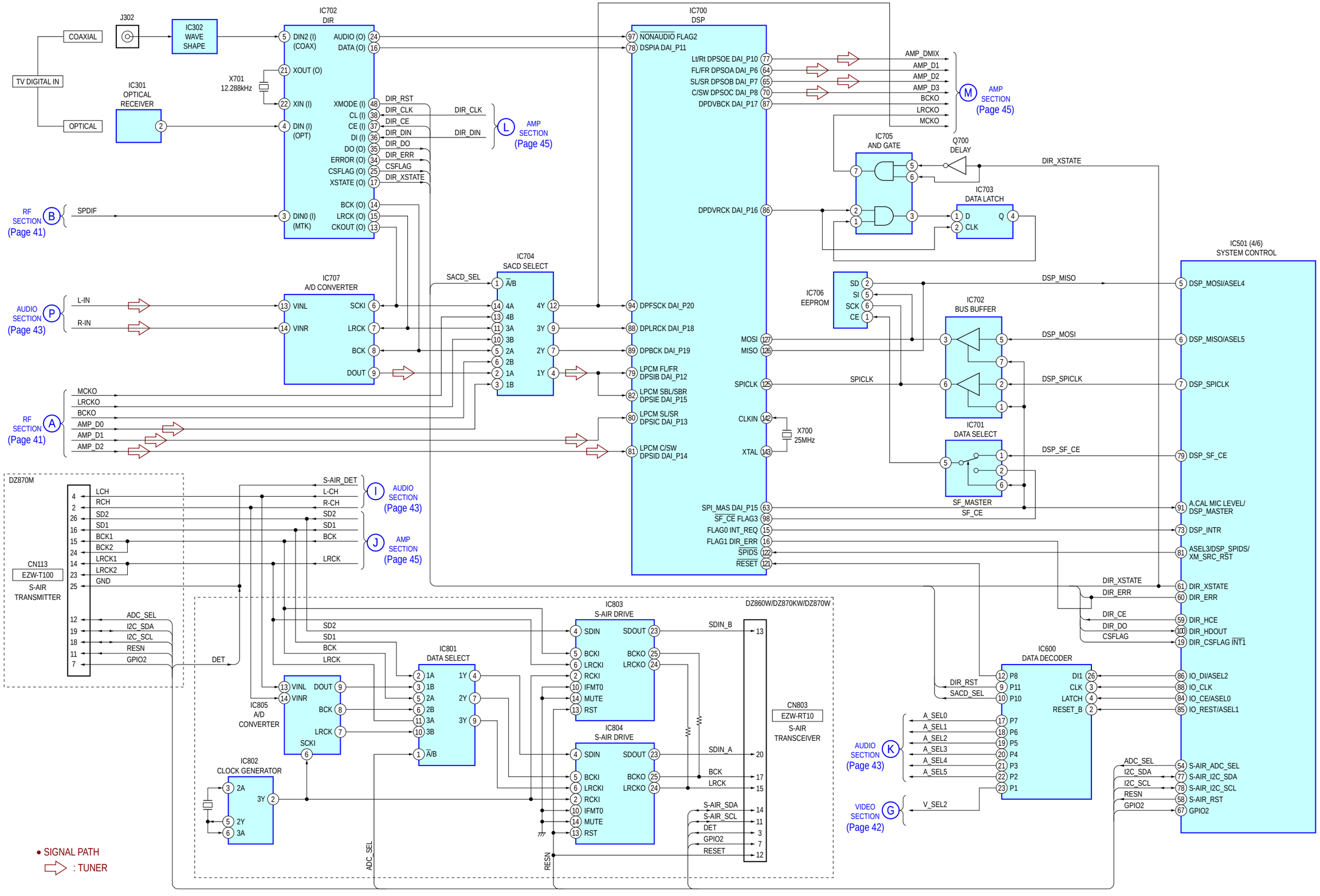

## 6-5. BLOCK DIAGRAM – AMP Section –

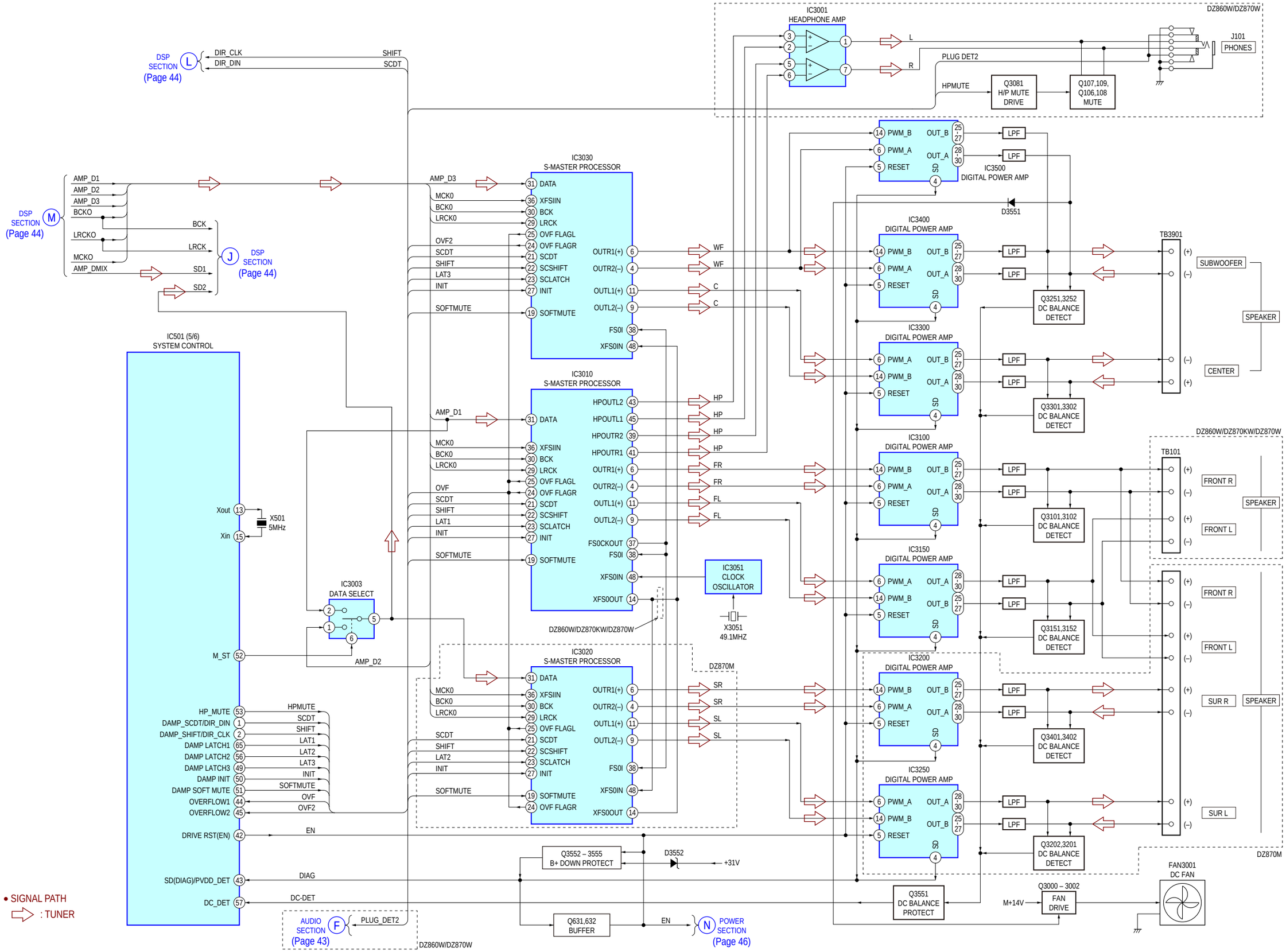

## 6-6. BLOCK DIAGRAM – POWER Section –

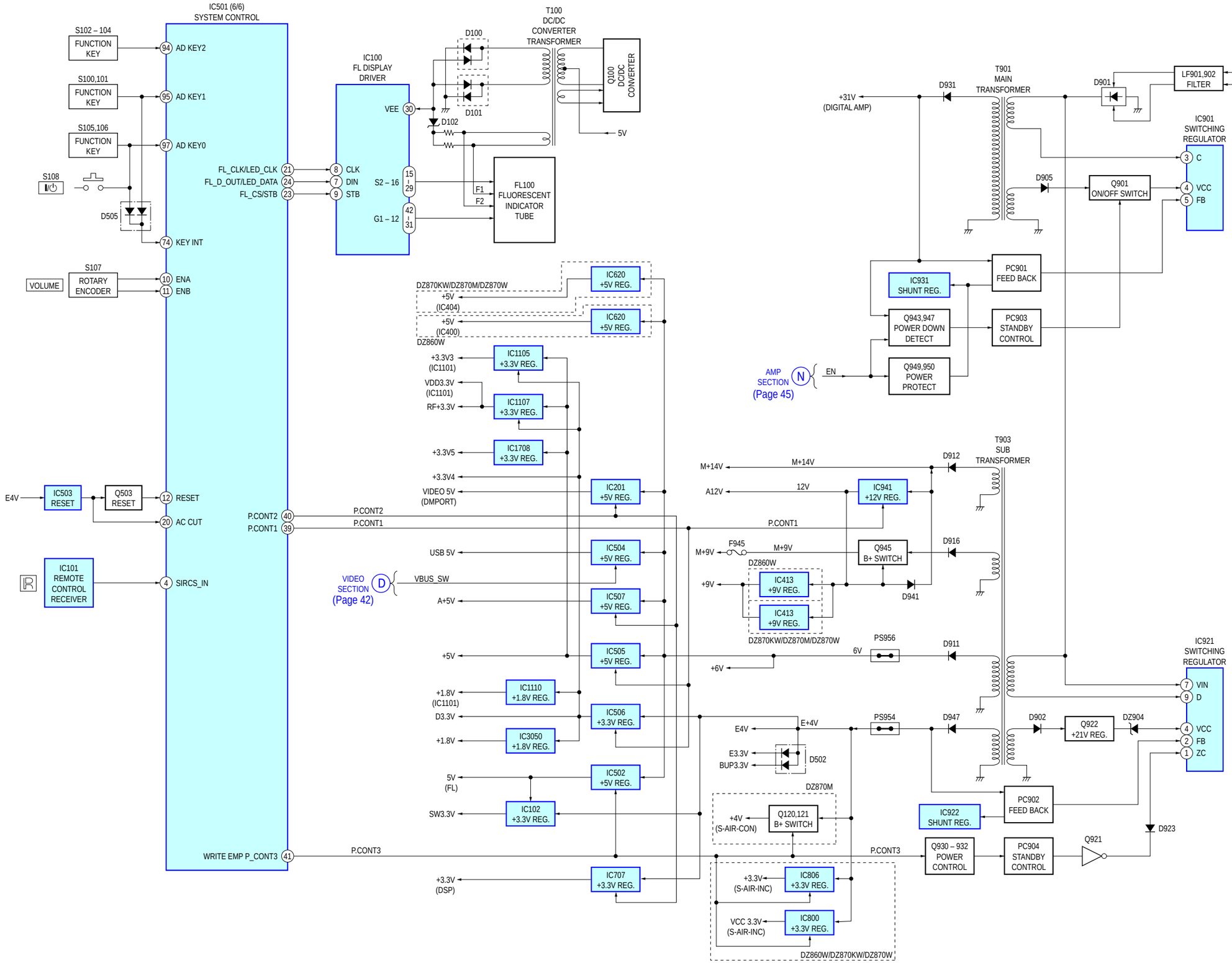

## 6-7. PRINTED WIRING BOARD – MAIN Board (Side A) –

• See page 39 for Circuit Boards Location. • : Uses unleaded solder.

When IC510 and IC1103 on the Main board are damaged, exchange the new Main board for the Main board which IC damaged.

14 13 12 11 10 9 8 7 6 5 4 3 2 1

A B C D E F G H I J

### 【MAIN BOARD】(SIDE A)

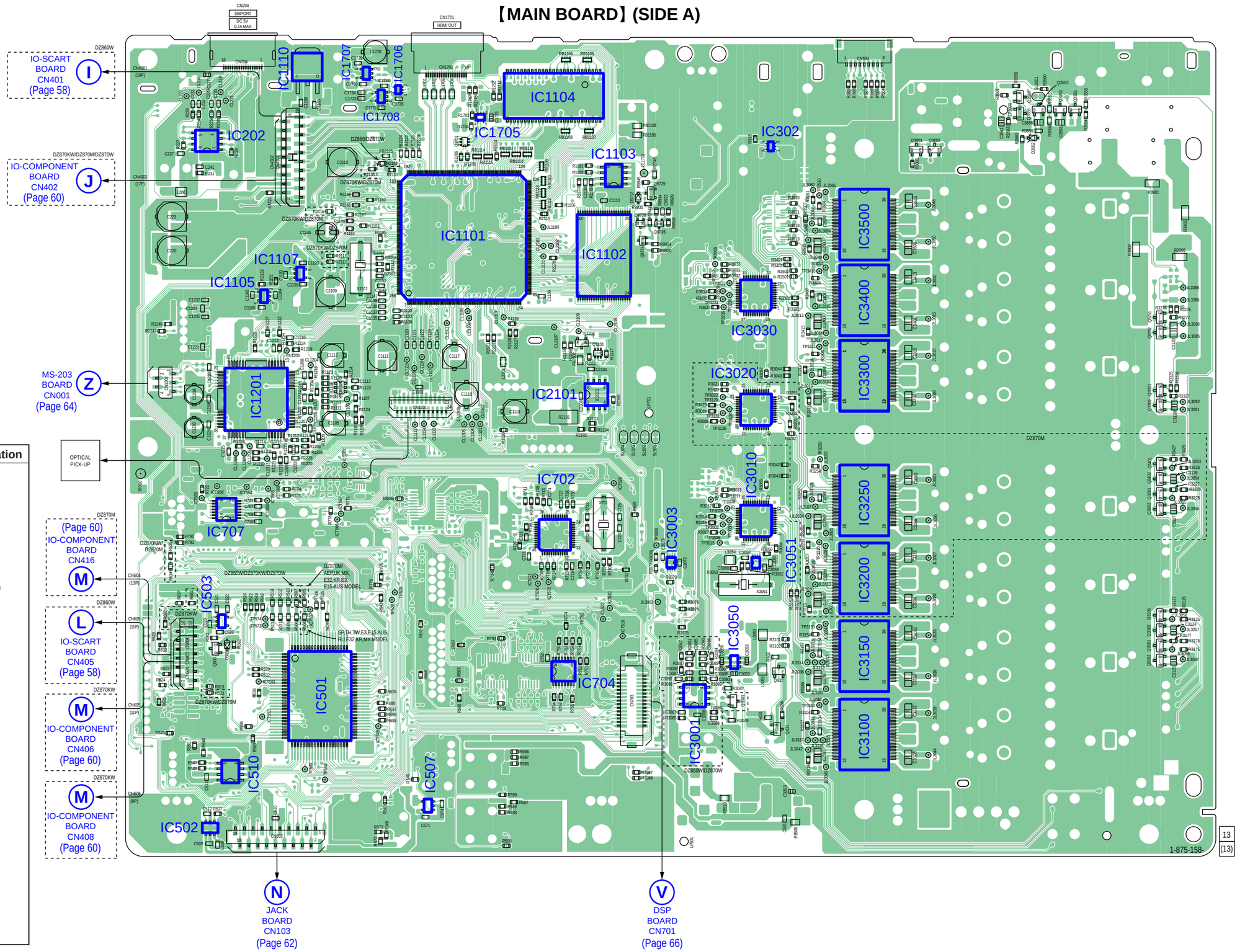


• **Semiconductor Location**

| Ref. No. | Location | Ref. No. | Location |
|---|---|---|---|
| D501 | H-11 | IC3250 | F-4 |
| D3552 | B-3 | IC3300 | E-4 |
| D9712 | C-7 | IC3400 | D-4 |
| | | IC3500 | C-4 |
| IC202 | C-11 | | |
| IC302 | B-5 | Q503 | H-11 |
| IC501 | H-10 | Q631 | H-5 |
| IC502 | I-11 | Q632 | H-5 |
| IC503 | G-11 | Q1101 | E-7 |
| IC507 | I-9 | Q1102 | E-10 |
| IC510 | I-11 | Q1103 | E-7 |
| IC702 | F-7 | Q1701 | C-8 |
| IC704 | H-7 | Q3001 | C-4 |
| IC707 | F-11 | Q3002 | C-4 |
| IC1101 | C-8 | Q3081 | H-6 |
| IC1102 | D-7 | Q3101 | G-1 |
| IC1103 | C-7 | Q3102 | G-1 |
| IC1104 | B-8 | Q3151 | H-1 |
| IC1105 | D-11 | Q3152 | H-1 |
| IC1107 | D-10 | Q3201 | F-1 |
| IC1110 | B-10 | Q3202 | F-1 |
| IC1201 | E-10 | Q3251 | D-1 |
| IC1705 | B-8 | Q3252 | D-1 |
| IC1706 | B-9 | Q3301 | E-1 |
| IC1707 | B-9 | Q3302 | E-1 |
| IC1708 | B-9 | Q3401 | F-1 |
| IC2101 | E-7 | Q3402 | F-1 |
| IC3001 | H-6 | Q3551 | B-2 |
| IC3003 | G-6 | Q3552 | B-2 |
| IC3010 | F-5 | Q3553 | B-3 |
| IC3020 | E-5 | Q3554 | B-3 |
| IC3030 | D-5 | Q3555 | B-3 |
| IC3050 | H-6 | Q9724 | D-7 |
| IC3051 | G-5 | Q9726 | C-6 |
| IC3100 | H-4 | Q9728 | C-7 |
| IC3150 | H-4 | Q9729 | C-6 |
| IC3200 | G-4 | | |

## 6-8. PRINTED WIRING BOARD – MAIN Board (Side B) –

• See page 39 for Circuit Boards Location.

• : Uses unleaded solder.

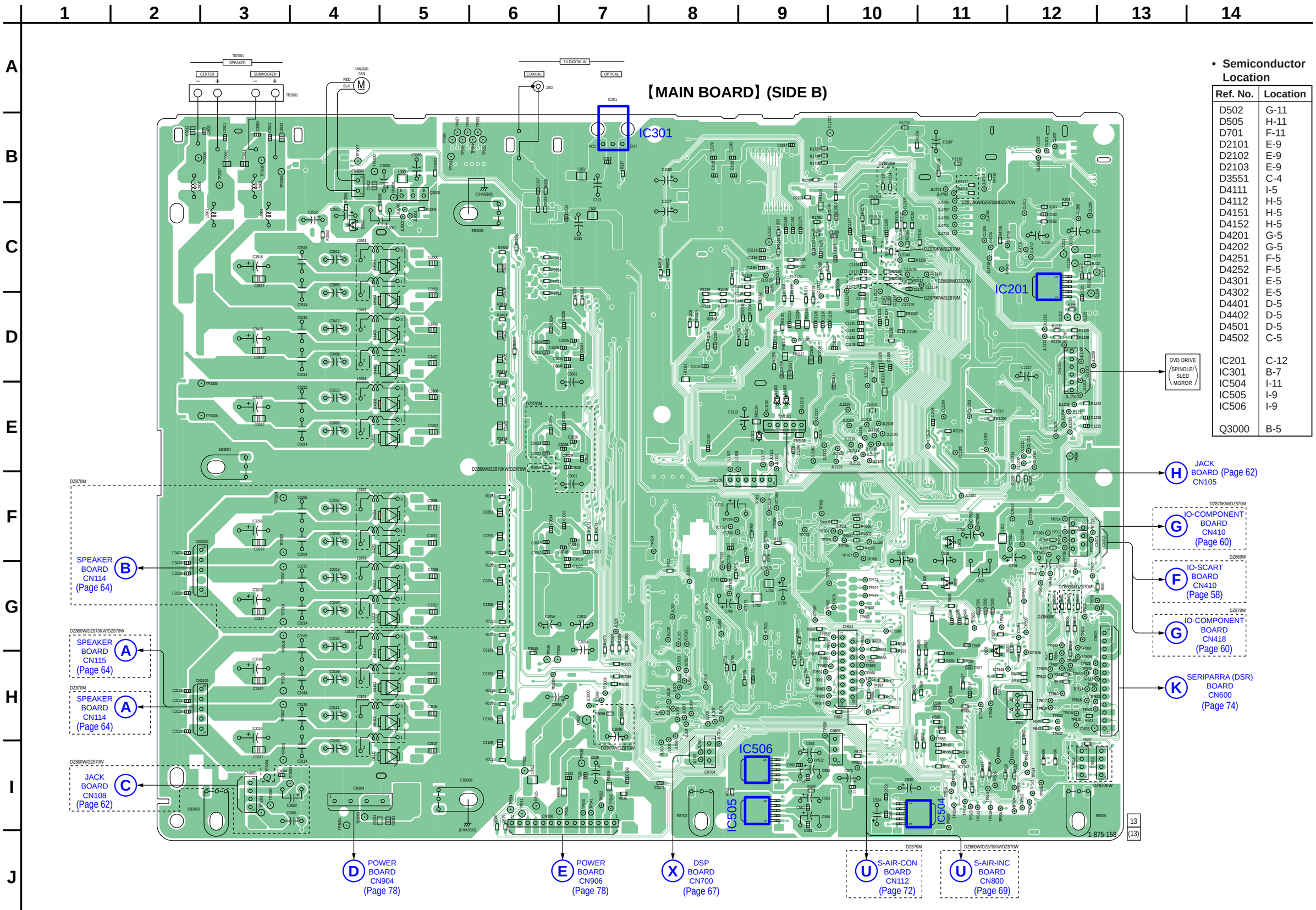


• Semiconductor Location

| Ref. No. | Location |
|---|---|
| D502 | G-11 |
| D505 | H-11 |
| D701 | F-11 |
| D2101 | E-9 |
| D2102 | E-9 |
| D2103 | E-9 |
| D3551 | C-4 |
| D4111 | I-5 |
| D4112 | H-5 |
| D4151 | H-5 |
| D4152 | H-5 |
| D4201 | G-5 |
| D4202 | G-5 |
| D4251 | F-5 |
| D4252 | F-5 |
| D4301 | E-5 |
| D4302 | E-5 |
| D4401 | D-5 |
| D4402 | D-5 |
| D4501 | D-5 |
| D4502 | C-5 |
| IC201 | C-12 |
| IC301 | B-7 |
| IC504 | I-11 |
| IC505 | I-9 |
| IC506 | I-9 |
| Q3000 | B-5 |

## 6-9. SCHEMATIC DIAGRAM – MAIN Board (1/9) –

• See page 81 for IC Block Diagrams.

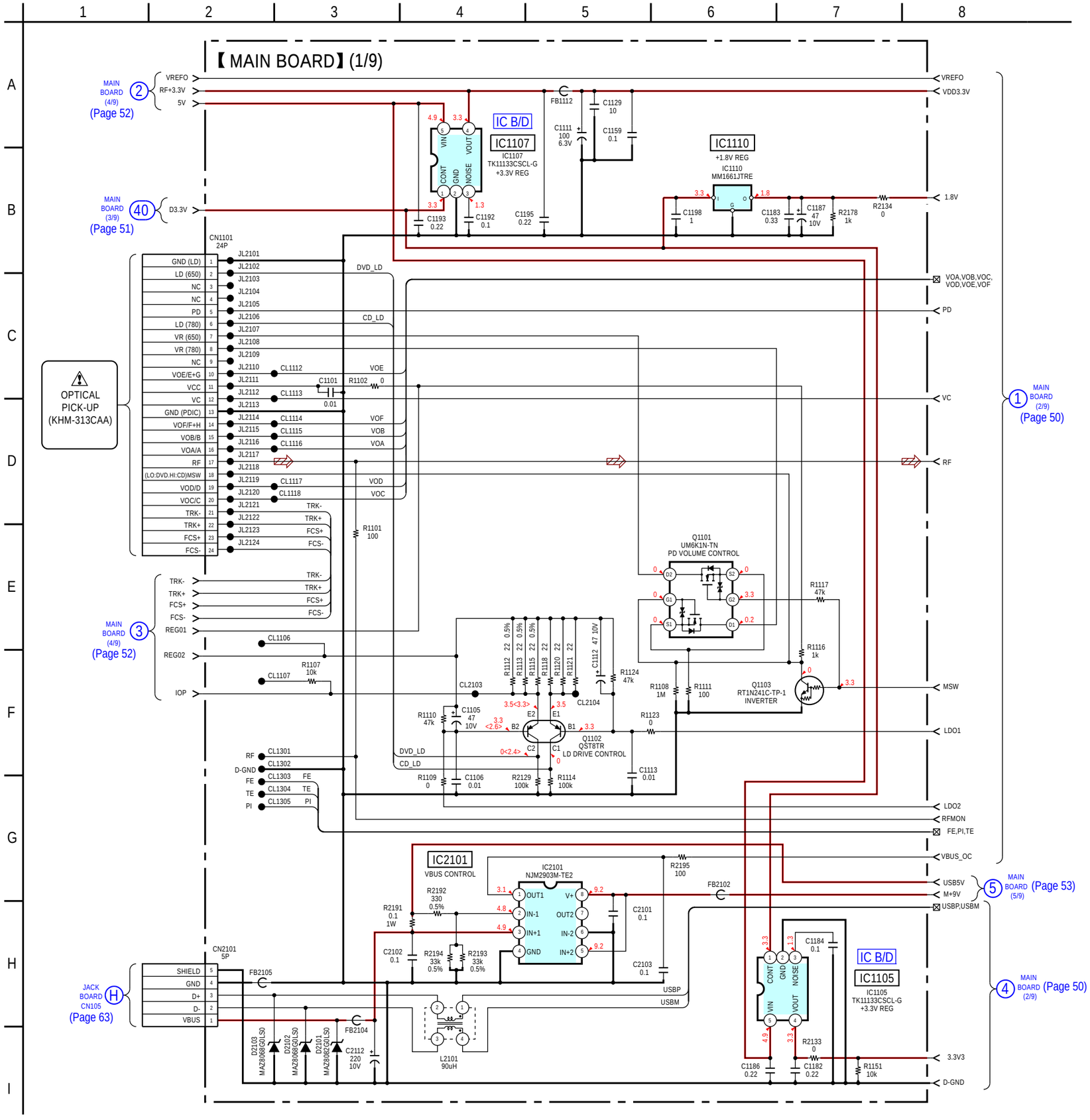

## 6-10. SCHEMATIC DIAGRAM – MAIN Board (2/9) –

• See page 39 for waveforms. • See page 88 for IC Pin Function Description of IC1101.

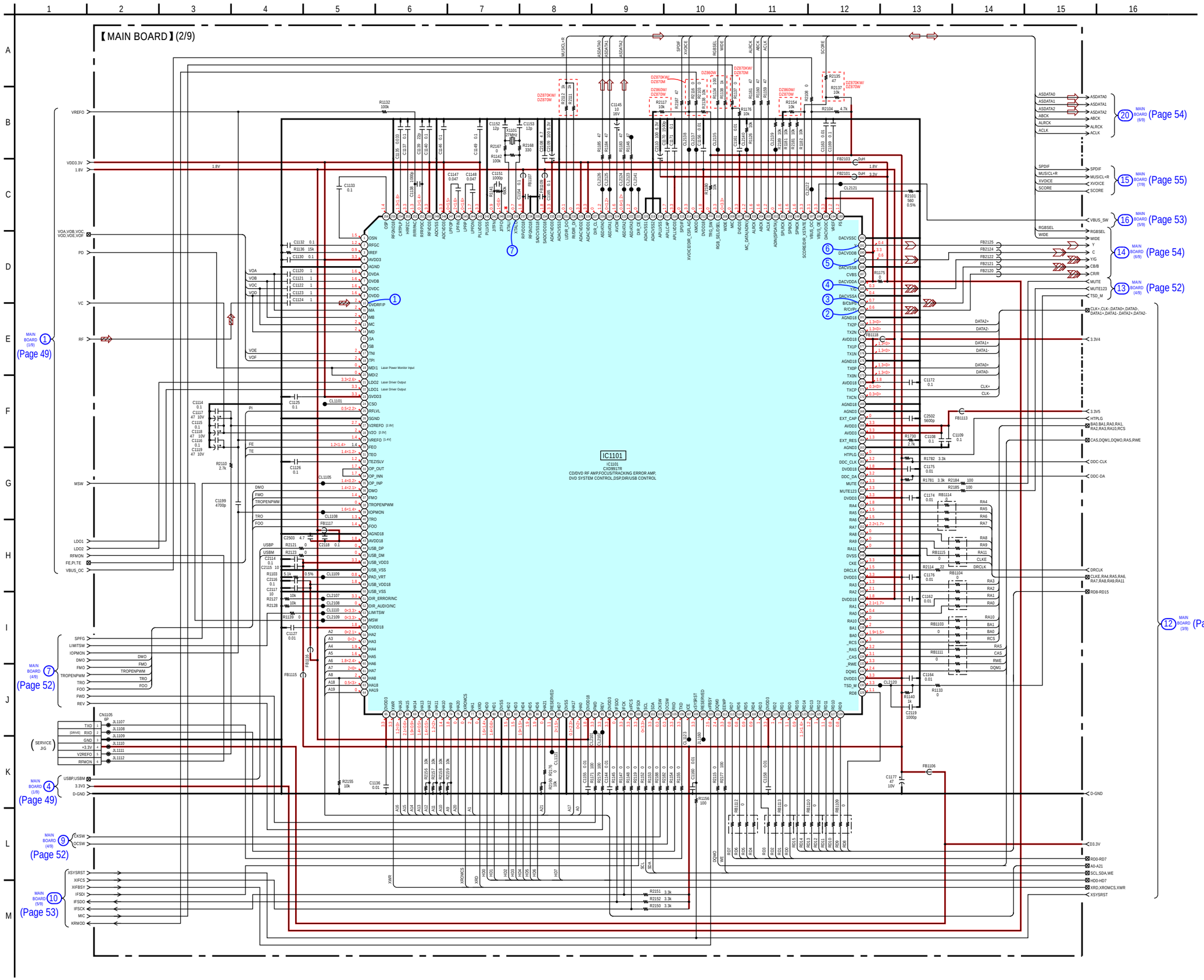

## 6-11. SCHEMATIC DIAGRAM – MAIN Board (3/9) –

• See page 81 for IC Block Diagrams.

When IC1103 on the Main board is damaged, exchange the new Main board for the Main board which IC damaged.

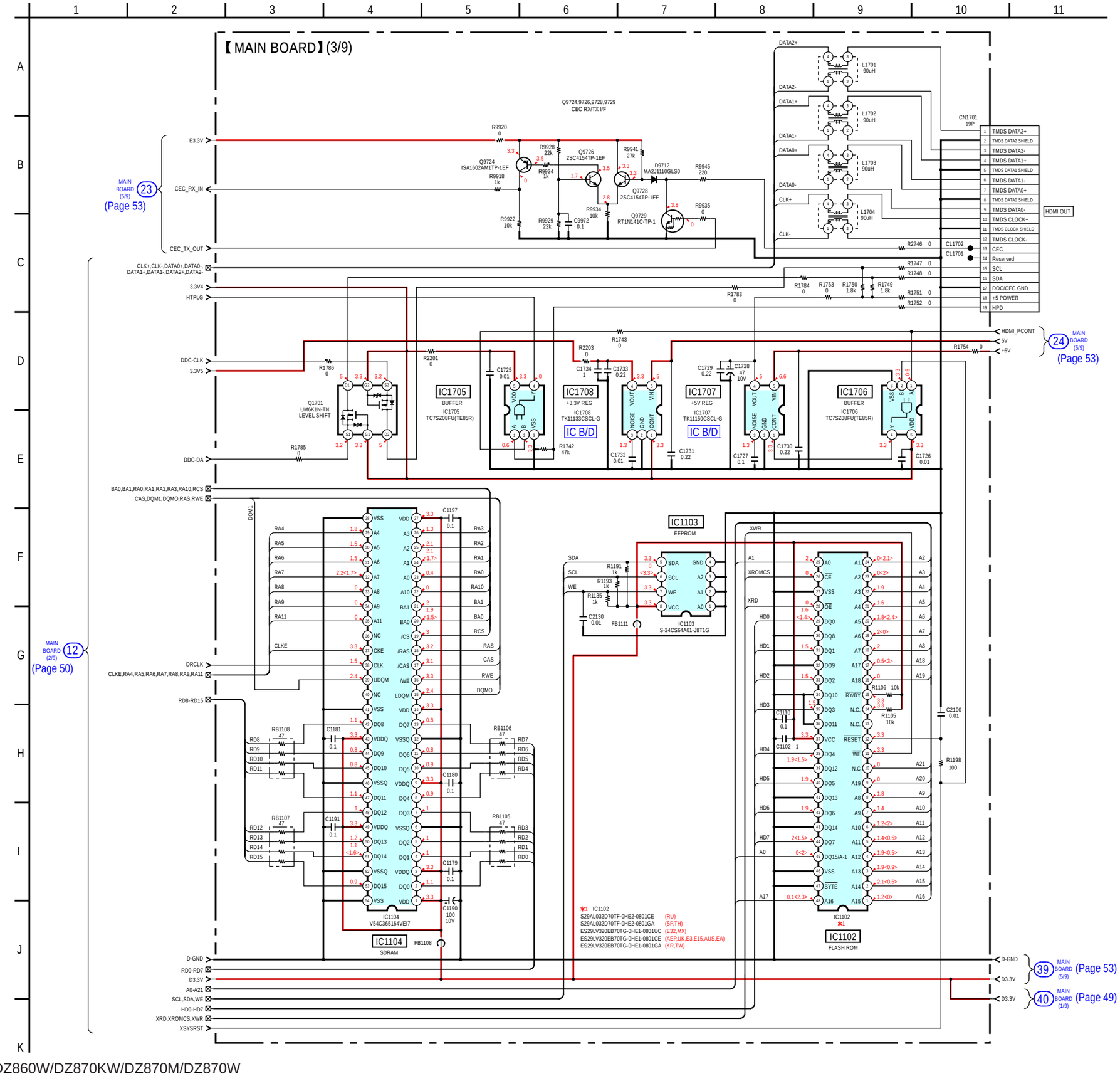

## 6-12. SCHEMATIC DIAGRAM – MAIN Board (4/9), MS-203 Board –

• See page 80 for IC Block Diagram.

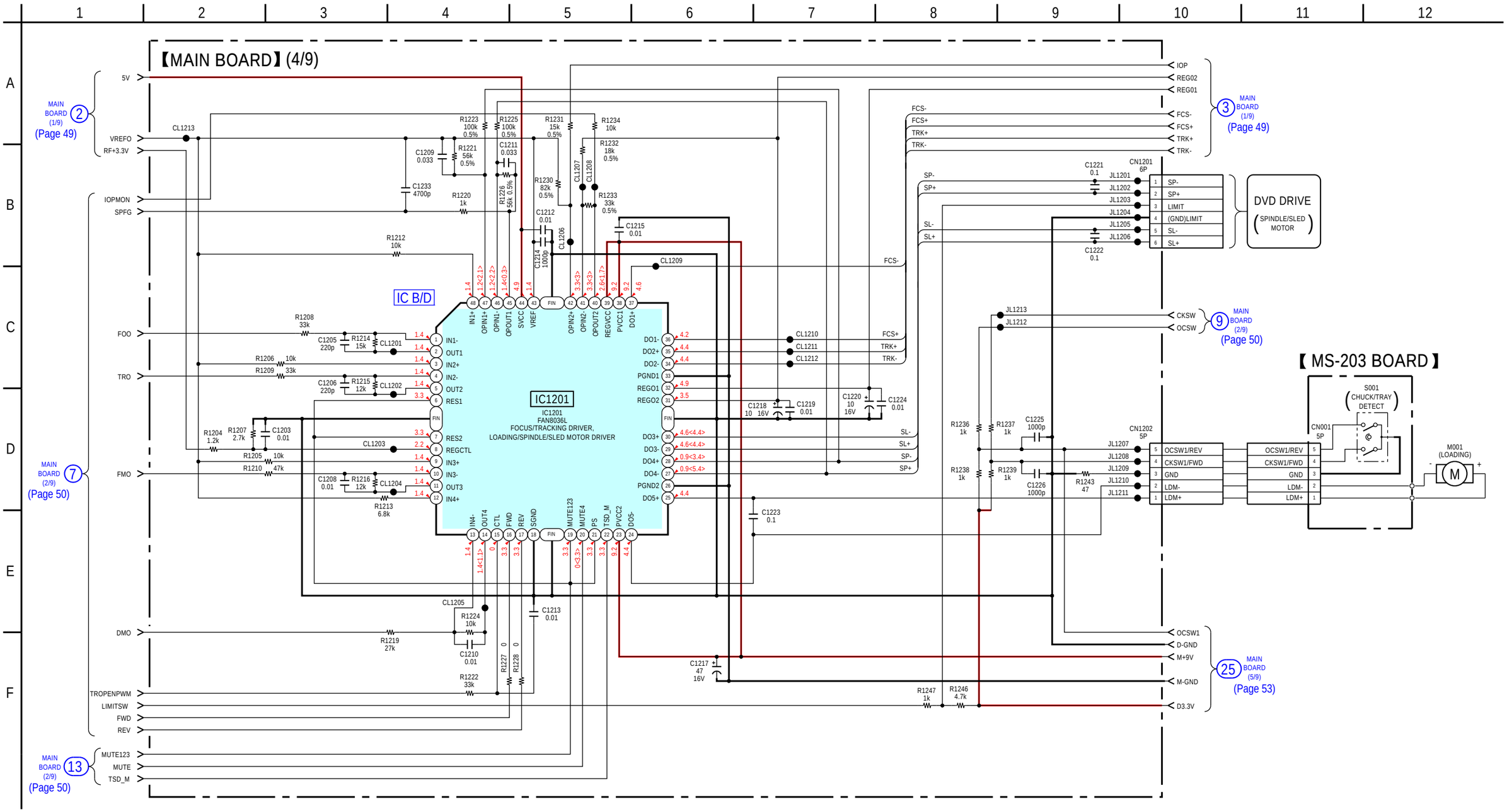

When IC510 on the Main board are damaged, exchange the new Main board for the Main board which IC damaged.

## 6-13. SCHEMATIC DIAGRAM – MAIN Board (5/9) –

• See page 39 for waveform. • See page 81, 82 for IC Block Diagrams. • See page 92 for IC Pin Function Description of IC501.

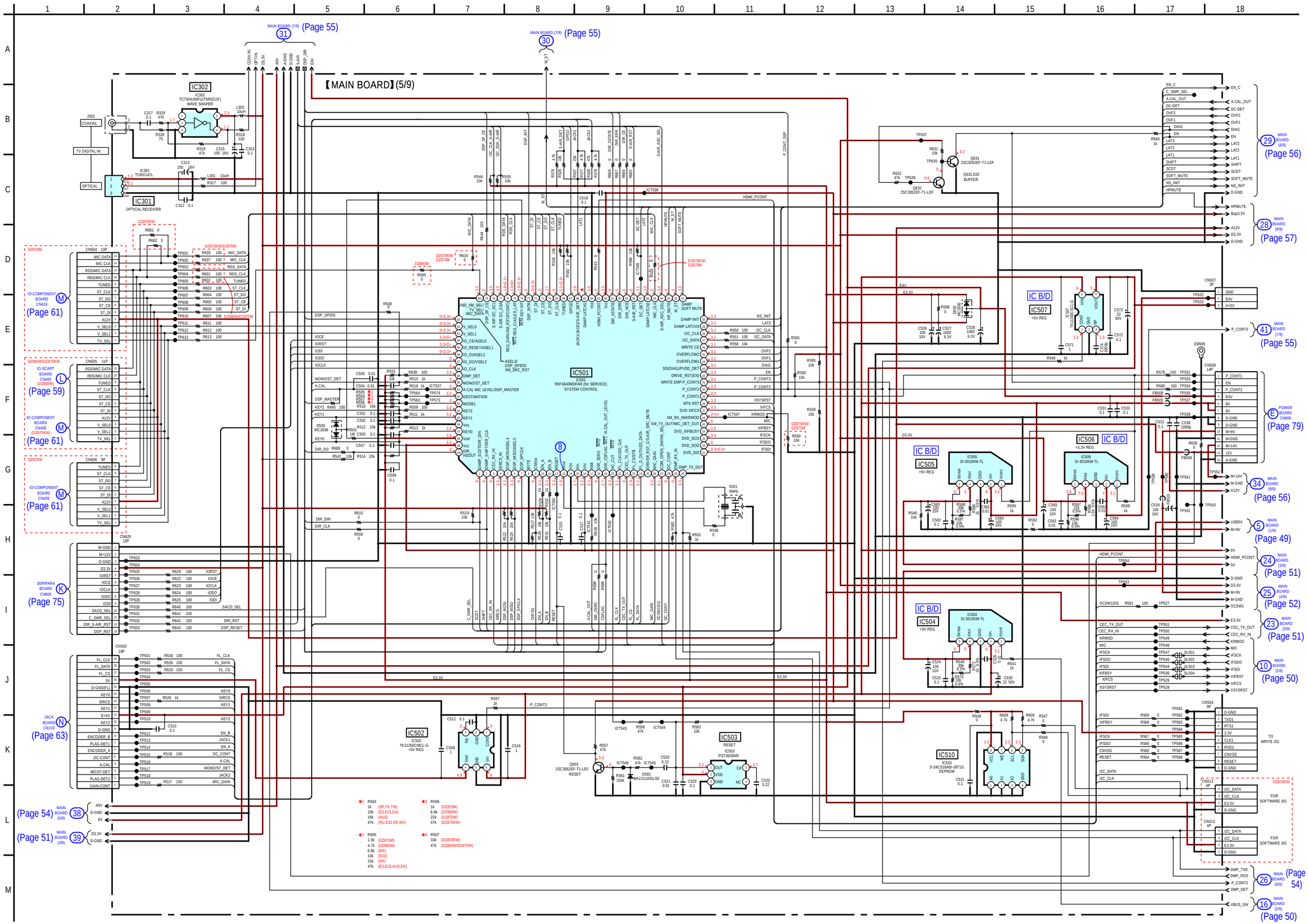

## 6-14. SCHEMATIC DIAGRAM – MAIN Board (6/9) –

• See page 82 for IC Block Diagram.

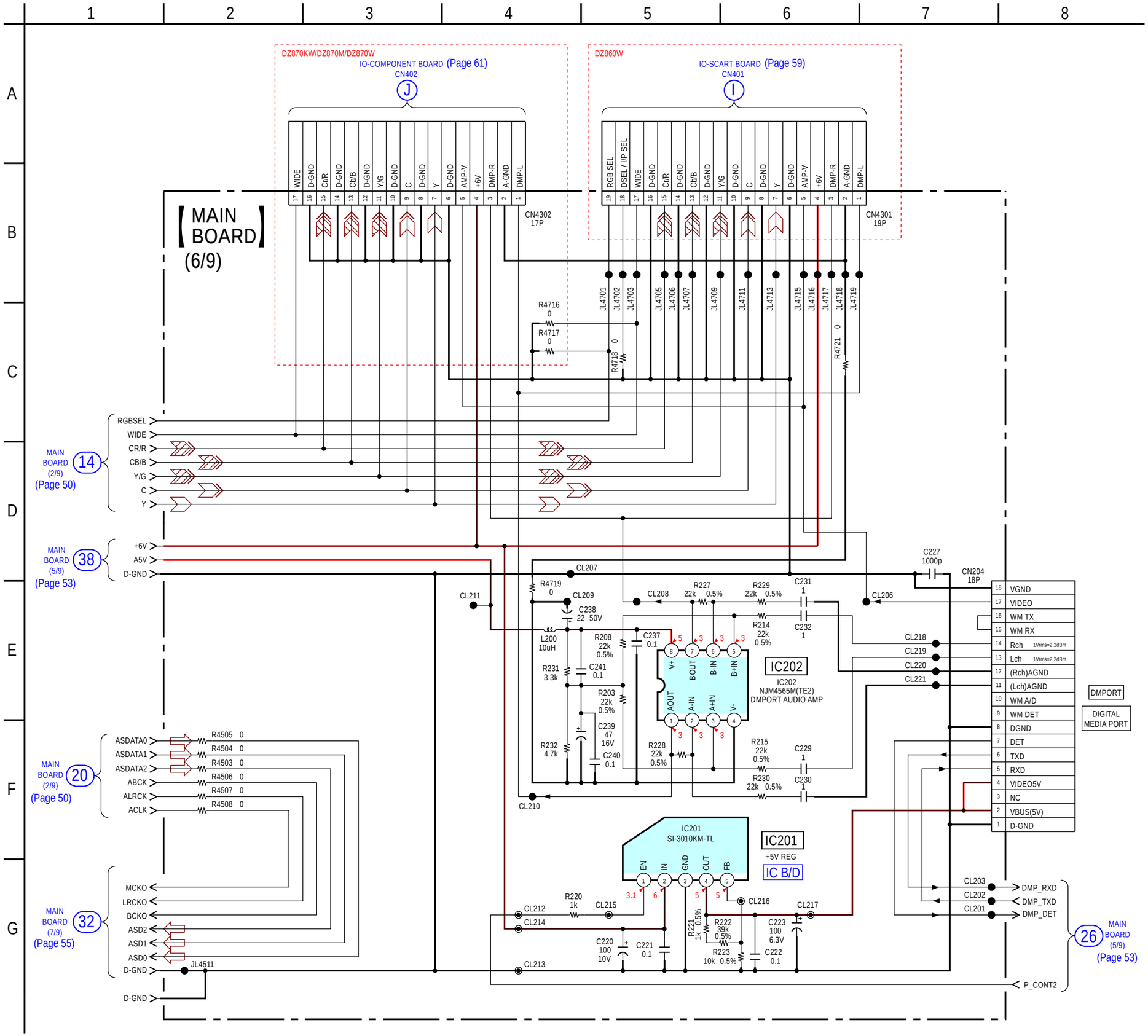

## 6-15. SCHEMATIC DIAGRAM – MAIN Board (7/9) –

• See page 39 for waveform. • See page 80, 81, 82 for IC Block Diagrams.

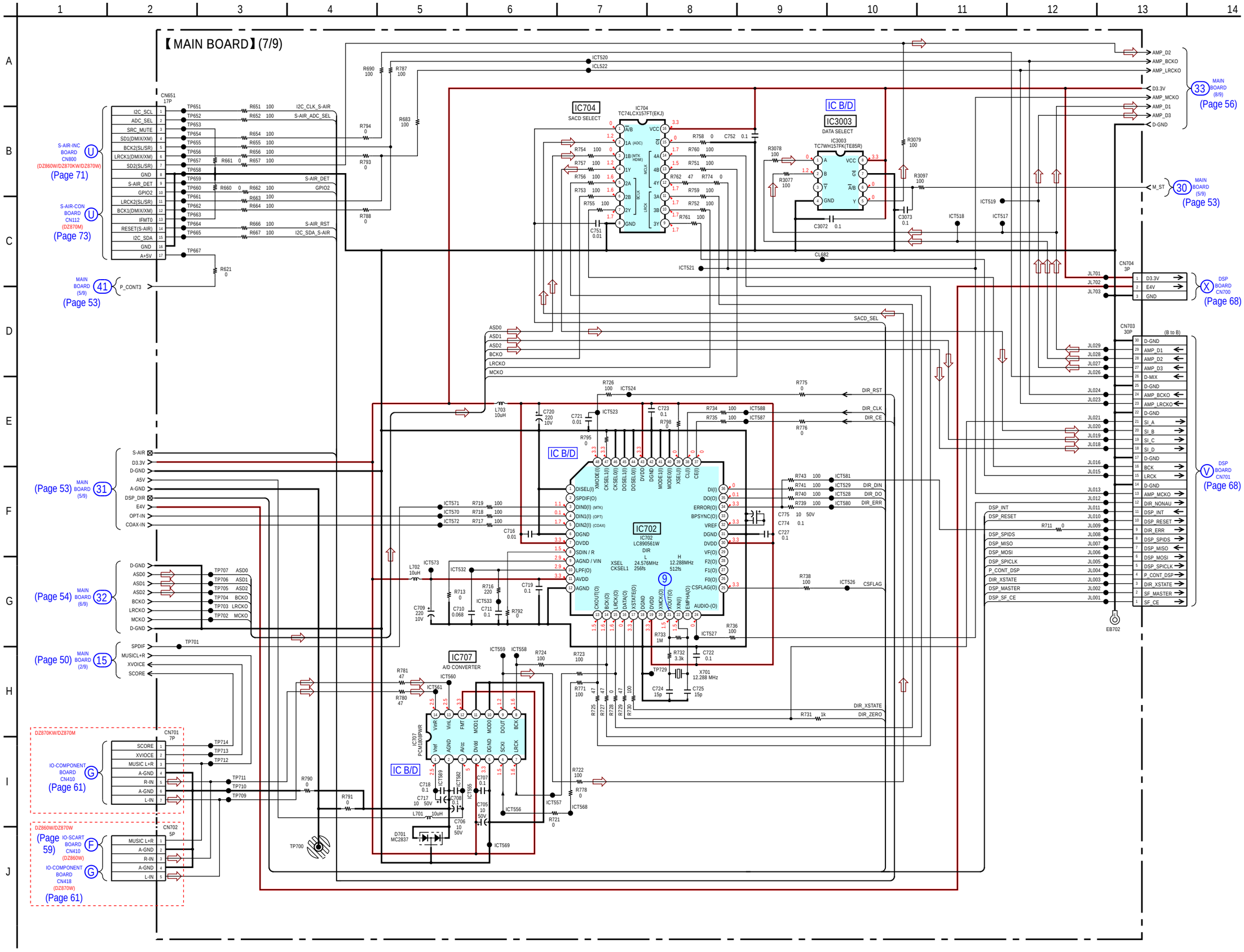

## 6-16. SCHEMATIC DIAGRAM – MAIN Board (8/9) – • See page 80, 83 for IC Block Diagrams.

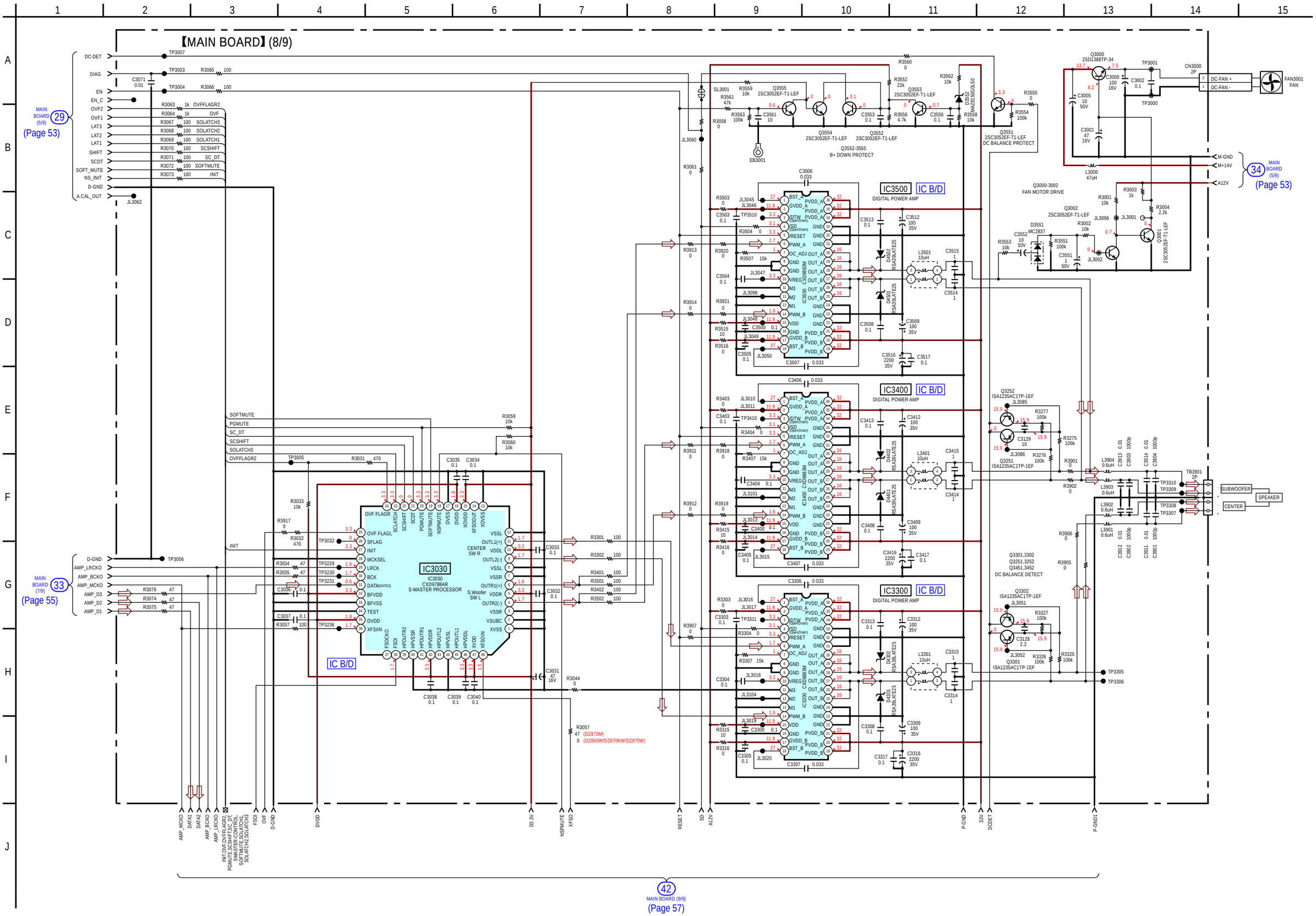

## 6-17. SCHEMATIC DIAGRAM – MAIN Board (9/9) –

• See page 39 for waveforms. • See page 80, 81, 83 for IC Block Diagrams.

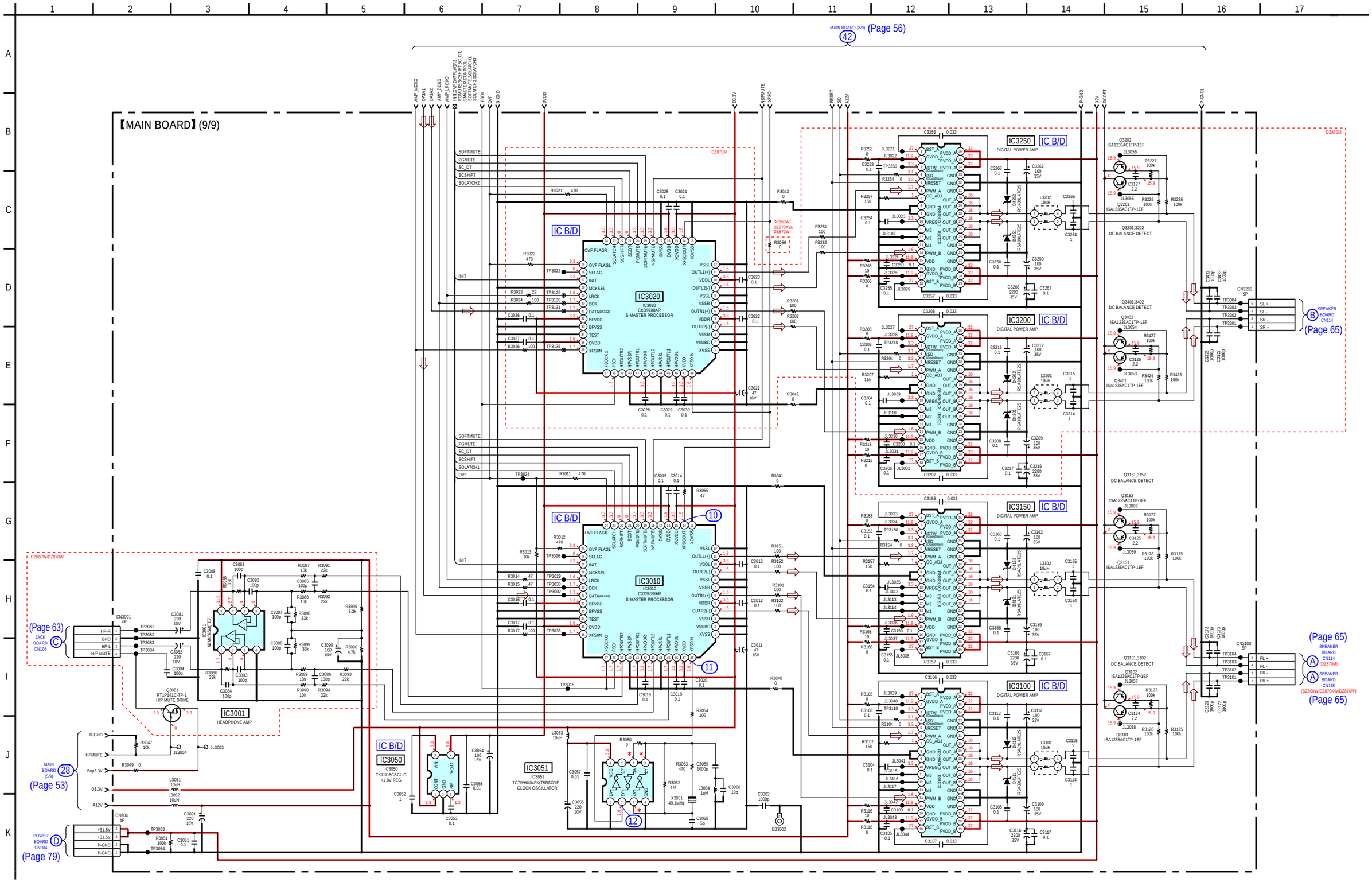

## 6-18. PRINTED WIRING BOARD – IO-SCART Board (DZ860W) –

• See page 39 for Circuit Boards Location. • : Uses unleaded solder.

【IO-SCART BOARD】(DZ860W)

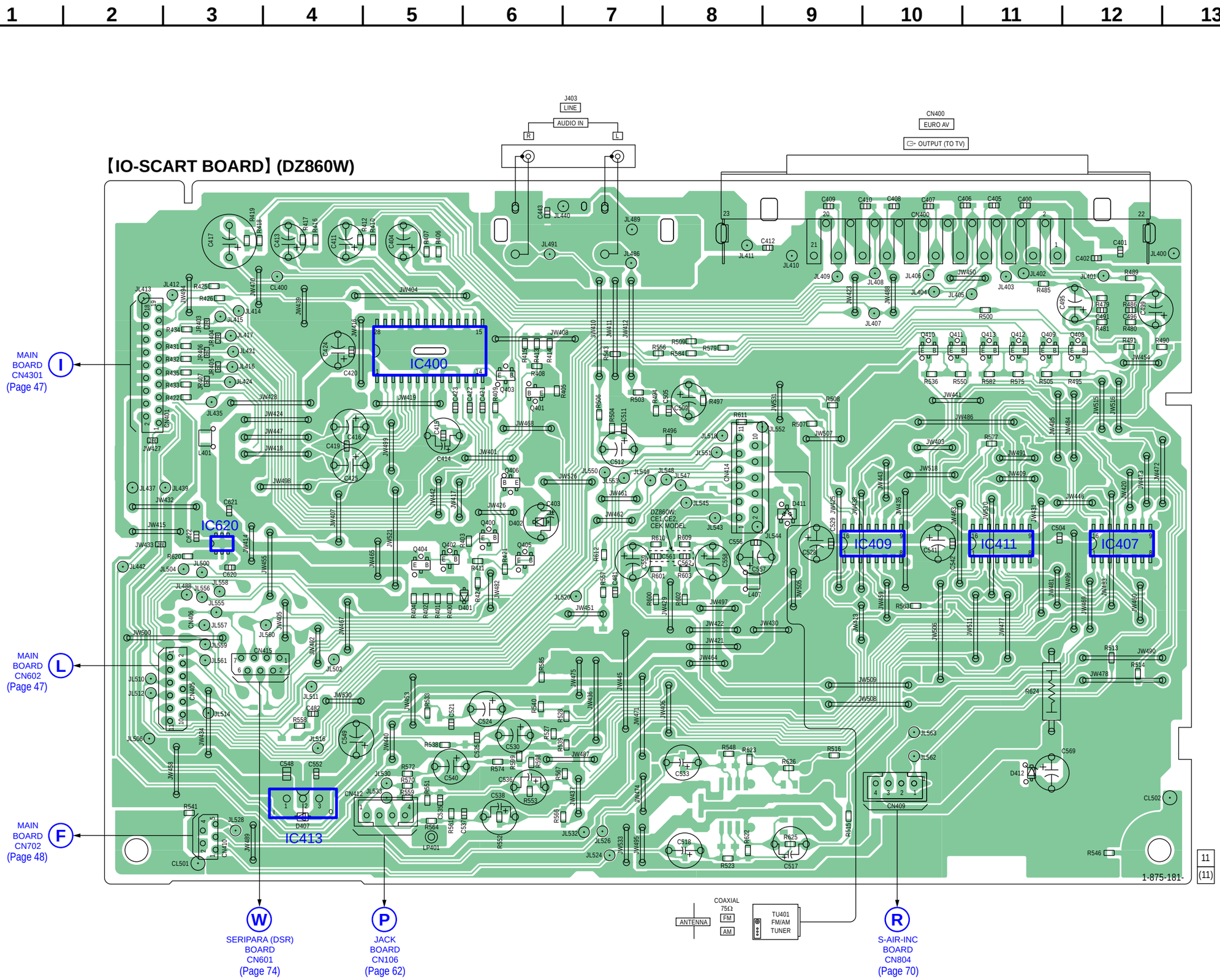


- **Semiconductor Location**

| Ref. No. | Location |
|---|---|
| D401 | F-6 |
| D402 | E-6 |
| D407 | H-4 |
| D411 | E-9 |
| D412 | H-11 |
| | |
| IC400 | D-5 |
| IC407 | F-12 |
| IC409 | F-10 |
| IC411 | F-11 |
| IC413 | H-4 |
| IC620 | F-3 |
| | |
| Q400 | F-6 |
| Q401 | D-6 |
| Q402 | F-5 |
| Q403 | D-6 |
| Q404 | F-5 |
| Q405 | F-6 |
| Q406 | E-6 |
| Q408 | D-12 |
| Q409 | D-11 |
| Q410 | D-10 |
| Q411 | D-10 |
| Q412 | D-11 |
| Q413 | D-11 |

## 6-19. SCHEMATIC DIAGRAM – IO-SCART Board (DZ860W) –

• See page 40 for waveforms. • See page 84 for IC Block Diagrams.

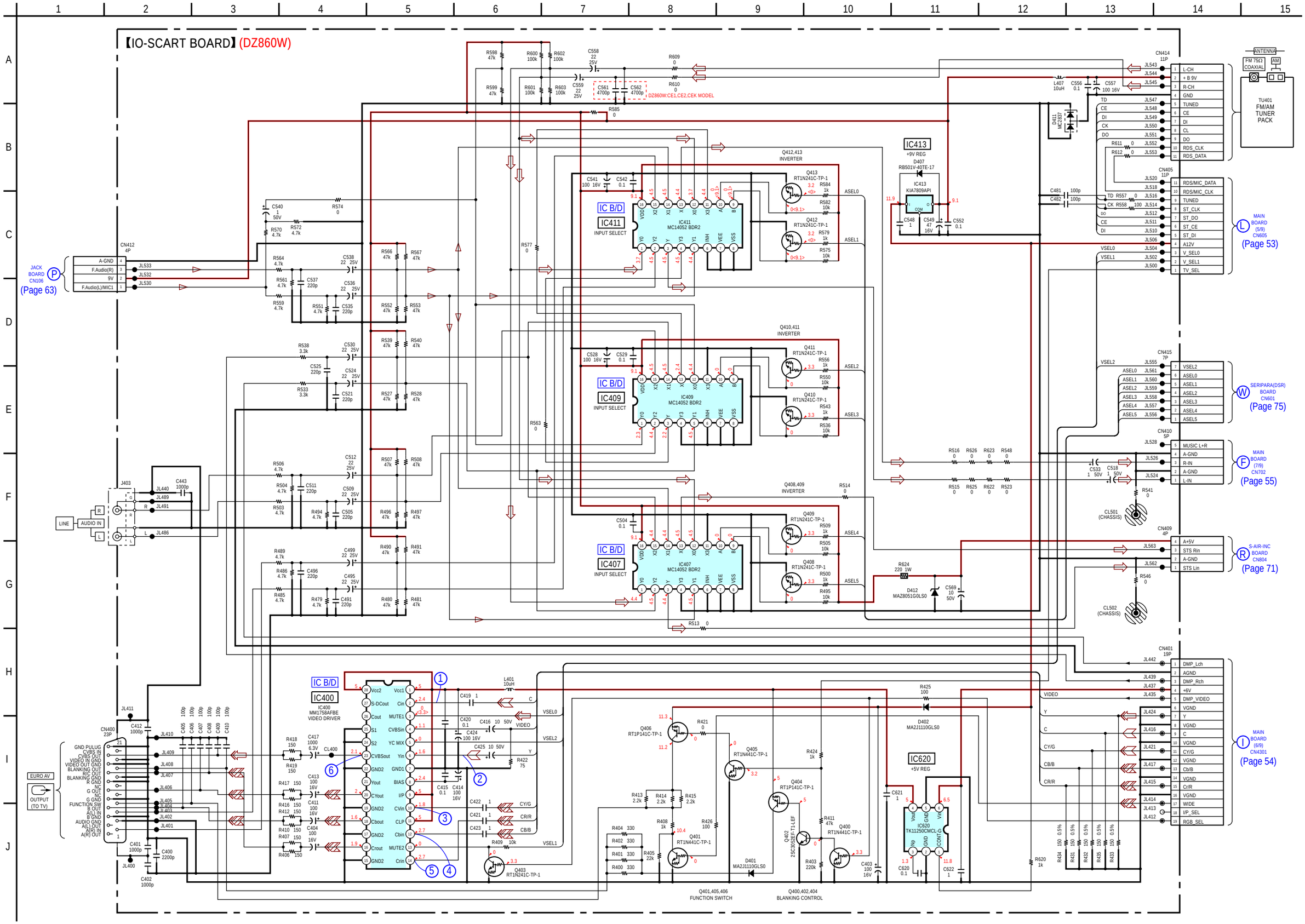

## 6-20. PRINTED WIRING BOARD – IO-COMPONENT Board (DZ870KW/DZ870M/DZ870W) –

• See page 39 for Circuit Boards Location. • : Uses unleaded solder.

【IO-COMPONENT BOARD】
(DZ870KW/DZ870M/DZ870W)

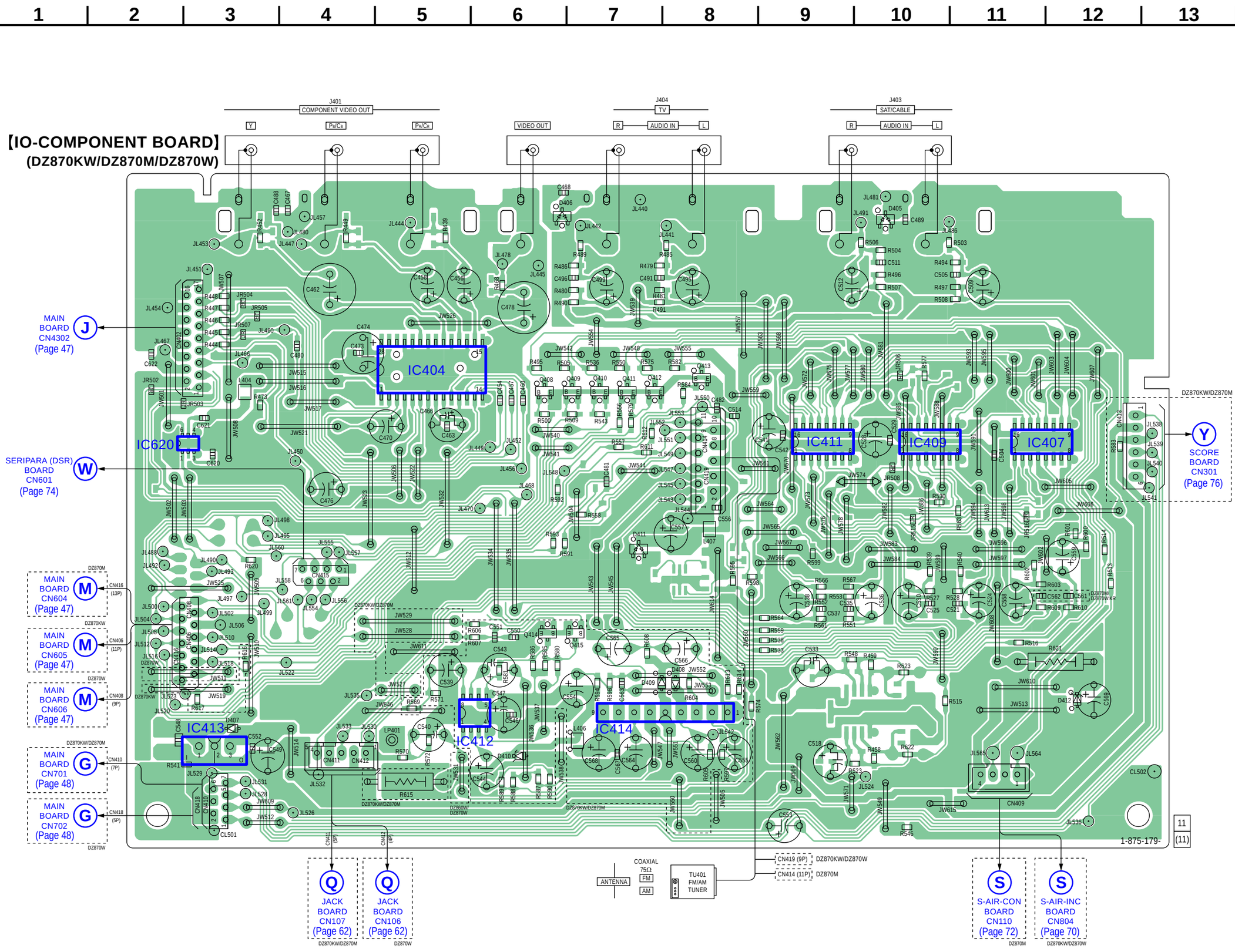


- **Semiconductor Location**

| Ref. No. | Location |
|---|---|
| D405 | C-10 |
| D406 | B-6 |
| D407 | H-3 |
| D408 | G-8 |
| D409 | G-7 |
| D410 | H-6 |
| D411 | F-7 |
| D412 | H-12 |
| IC404 | D-5 |
| IC407 | E-11 |
| IC409 | E-10 |
| IC411 | E-9 |
| IC412 | H-6 |
| IC413 | H-3 |
| IC414 | H-7 |
| IC620 | E-2 |
| Q408 | D-6 |
| Q409 | D-7 |
| Q410 | D-7 |
| Q411 | D-7 |
| Q412 | D-7 |
| Q413 | D-8 |
| Q414 | G-6 |
| Q415 | G-7 |

## 6-21. SCHEMATIC DIAGRAM – IO-COMPONENT Board (DZ870KW/DZ870M/DZ870W) –

• See page 40 for waveforms. • See page 84 for IC Block Diagrams.

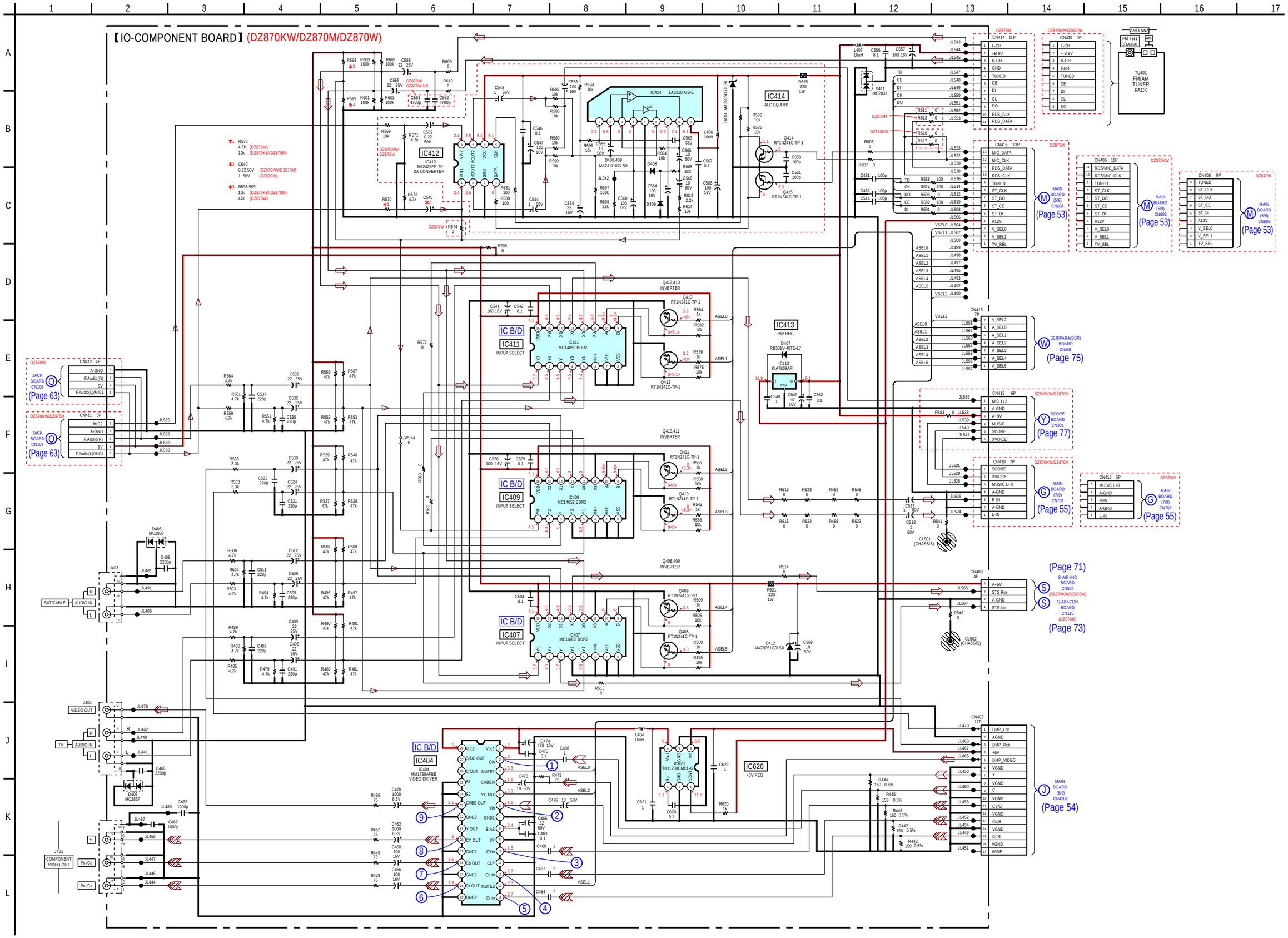

## 6-22. PRINTED WIRING BOARDS – JACK, P-SW Board –

• See page 39 for Circuit Boards Location. • : Uses unleaded solder.

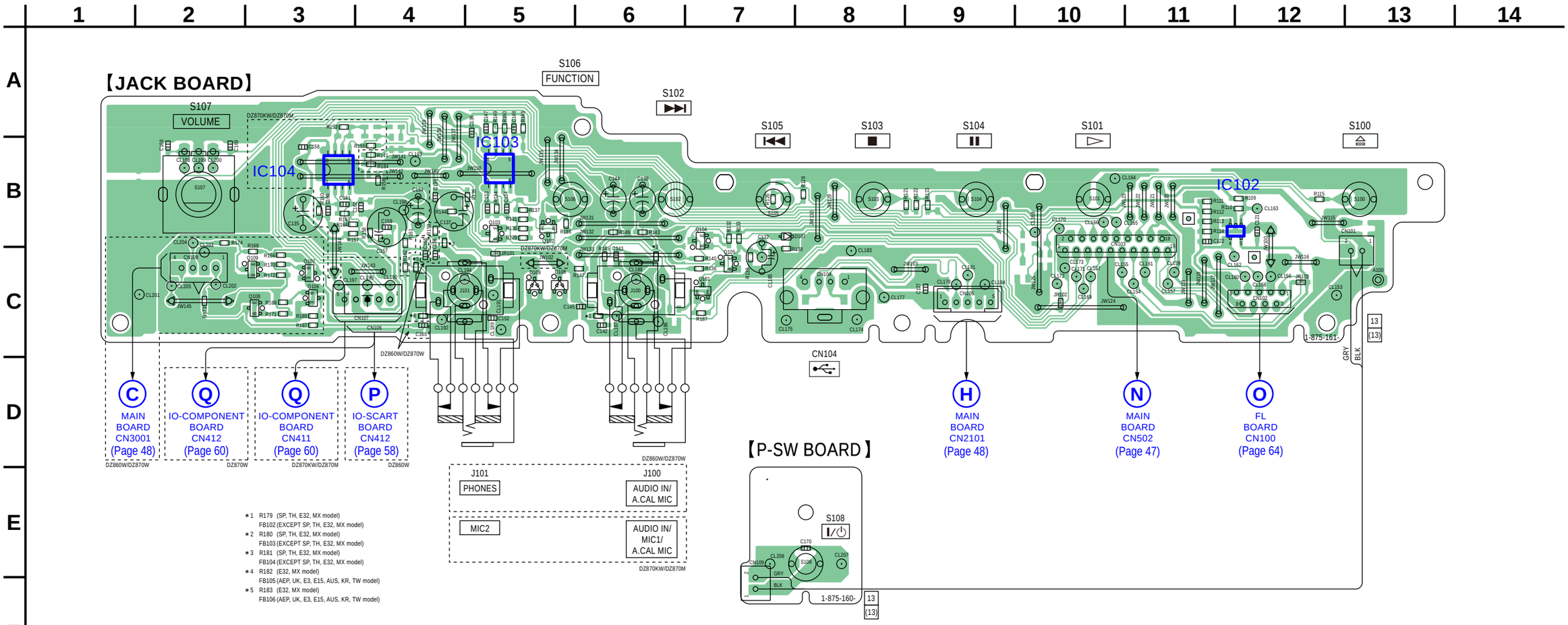


∗1 R179 (SP, TH, E32, MX model)
FB102 (EXCEPT SP, TH, E32, MX model)
∗2 R180 (SP, TH, E32, MX model)
FB103 (EXCEPT SP, TH, E32, MX model)
∗3 R181 (SP, TH, E32, MX model)
FB104 (EXCEPT SP, TH, E32, MX model)
∗4 R182 (E32, MX model)
FB105 (AEP, UK, E3, E15, AUS, KR, TW model)
∗5 R183 (E32, MX model)
FB106 (AEP, UK, E3, E15, AUS, KR, TW model)

- **Semiconductor Location**

| Ref. No. | Location |
|---|---|
| D107 | B-8 |
| D108 | C-5 |
| D109 | C-5 |
| IC102 | B-12 |
| IC103 | B-5 |
| IC104 | B-3 |
| Q101 | C-7 |
| Q102 | B-5 |
| Q103 | B-5 |
| Q104 | B-7 |
| Q105 | C-7 |
| Q106 | C-3 |
| Q107 | C-3 |
| Q108 | C-3 |
| Q109 | C-3 |

## 6-23. SCHEMATIC DIAGRAM – JACK, P-SW Board –

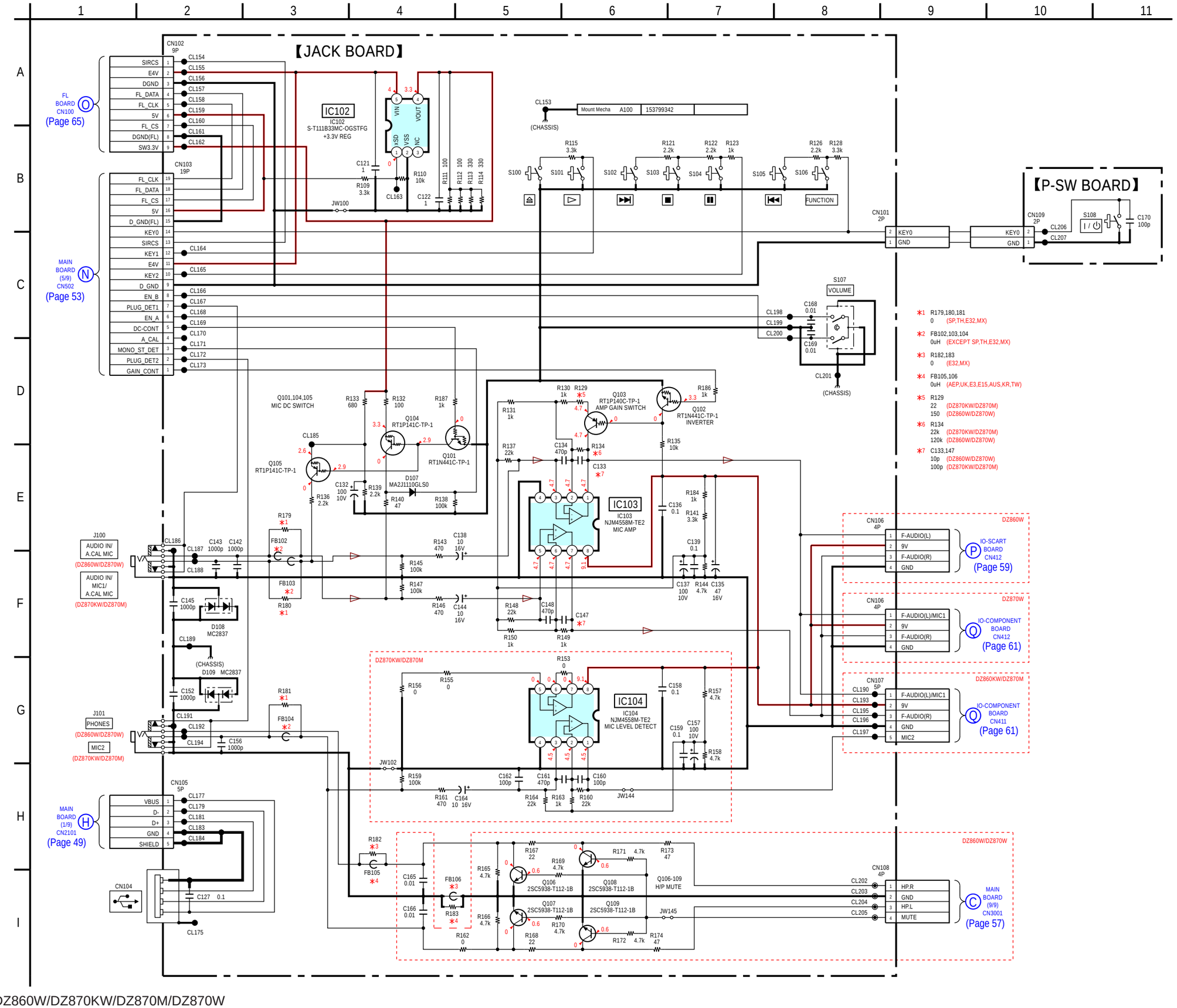

## 6-24. PRINTED WIRING BOARDS – FL, MS-203, SPEAKER Board –

• See page 39 for Circuit Boards Location. • : Uses unleaded solder.

【FL BOARD】

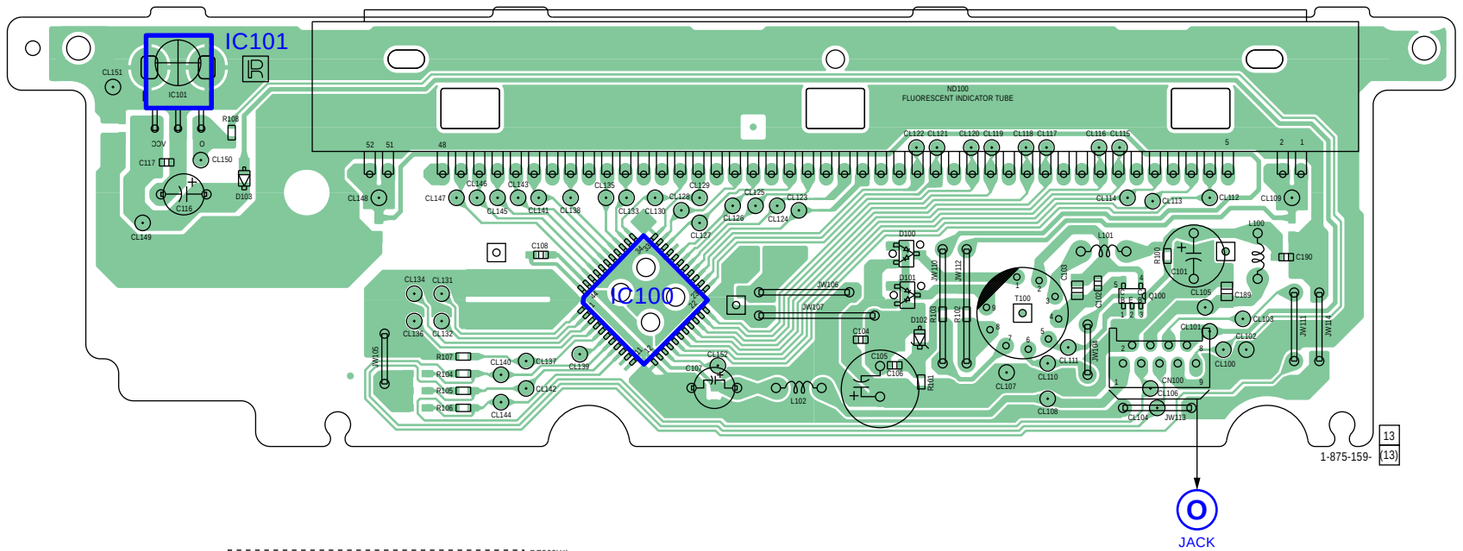


O
JACK BOARD CN102 (Page 62)

- Semiconductor Location

| Ref. No. | Location |
|---|---|
| D100 | C-7 |
| D101 | C-7 |
| D102 | C-7 |
| D103 | B-3 |
| IC100 | C-5 |
| IC101 | B-3 |
| Q100 | C-8 |

【SPEAKER BOARD】

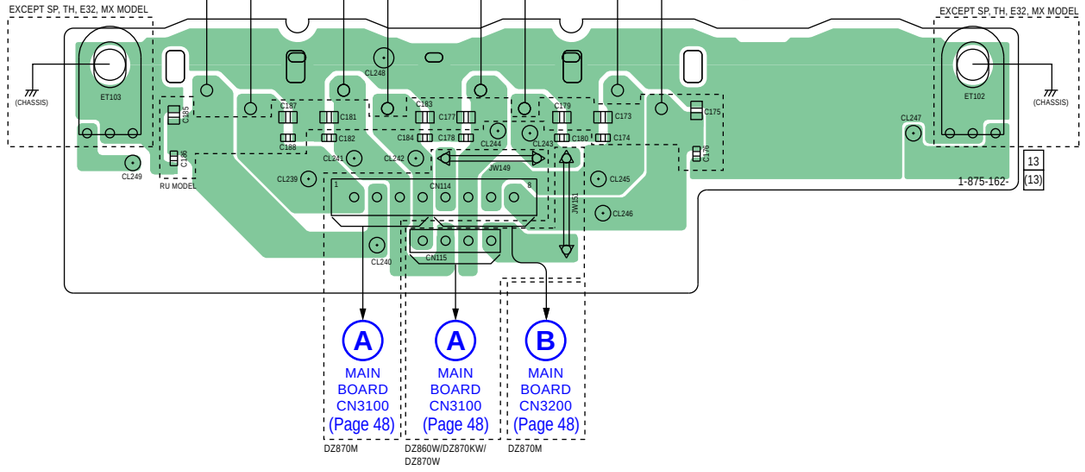


A MAIN BOARD CN3100 (Page 48) DZ870M

A MAIN BOARD CN3100 (Page 48) DZ860W/DZ870KW/ DZ870W

B MAIN BOARD CN3200 (Page 48) DZ870M

【MS-203 BOARD】

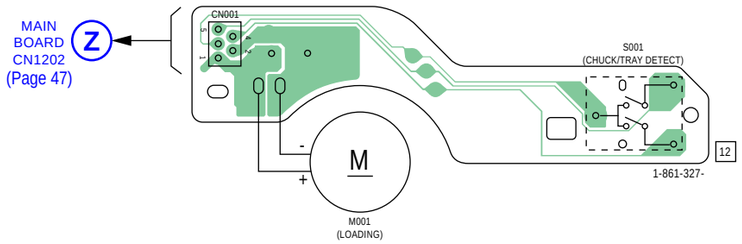


Z MAIN BOARD CN1202 (Page 47)

## 6-25. SCHEMATIC DIAGRAM – FL, SPEAKER Board –

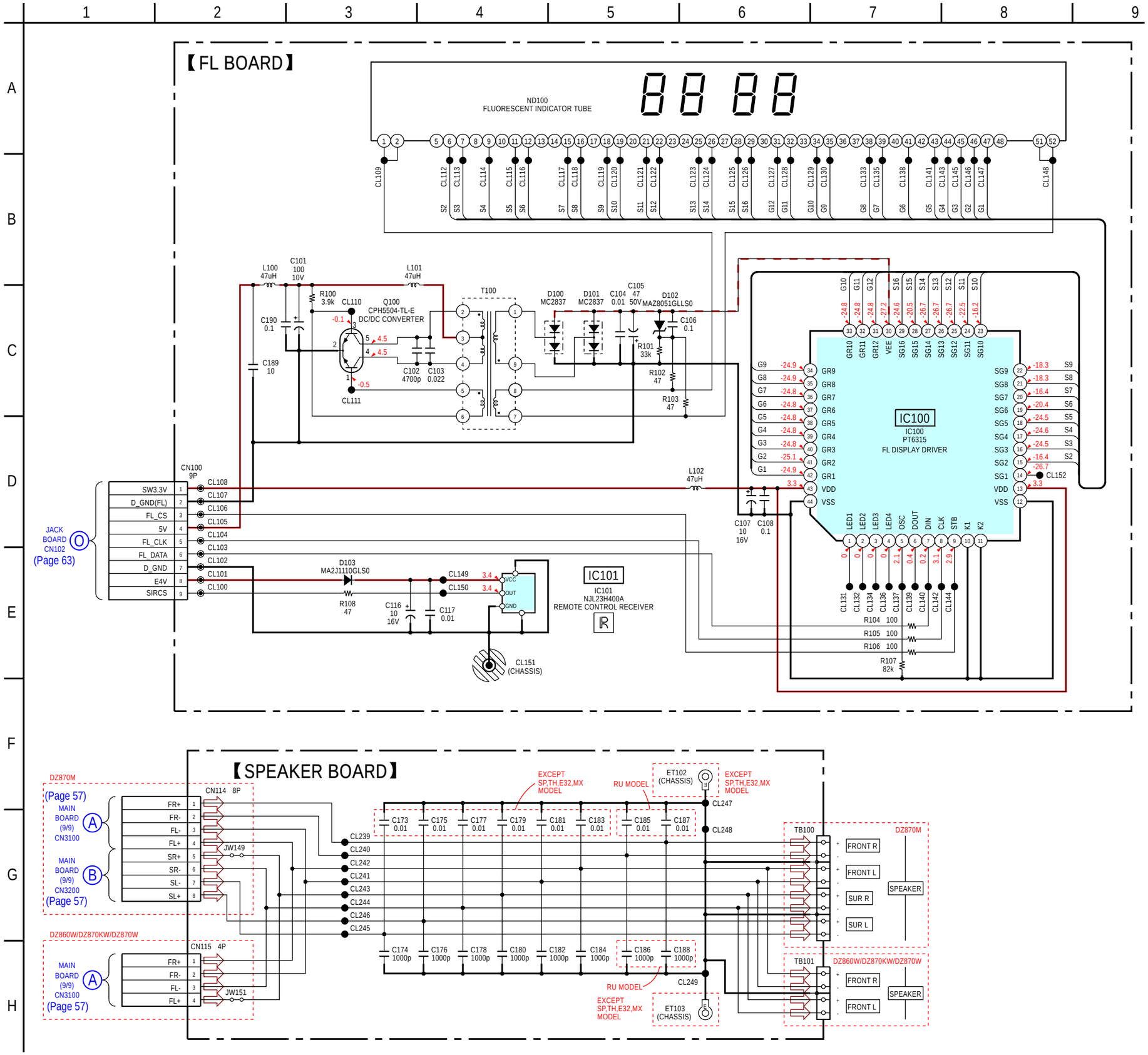

## 6-26. PRINTED WIRING BOARD – DSP Board (Side A) –

• See page 39 for Circuit Boards Location. • : Uses unleaded solder.

【DSP BOARD】(SIDE A)

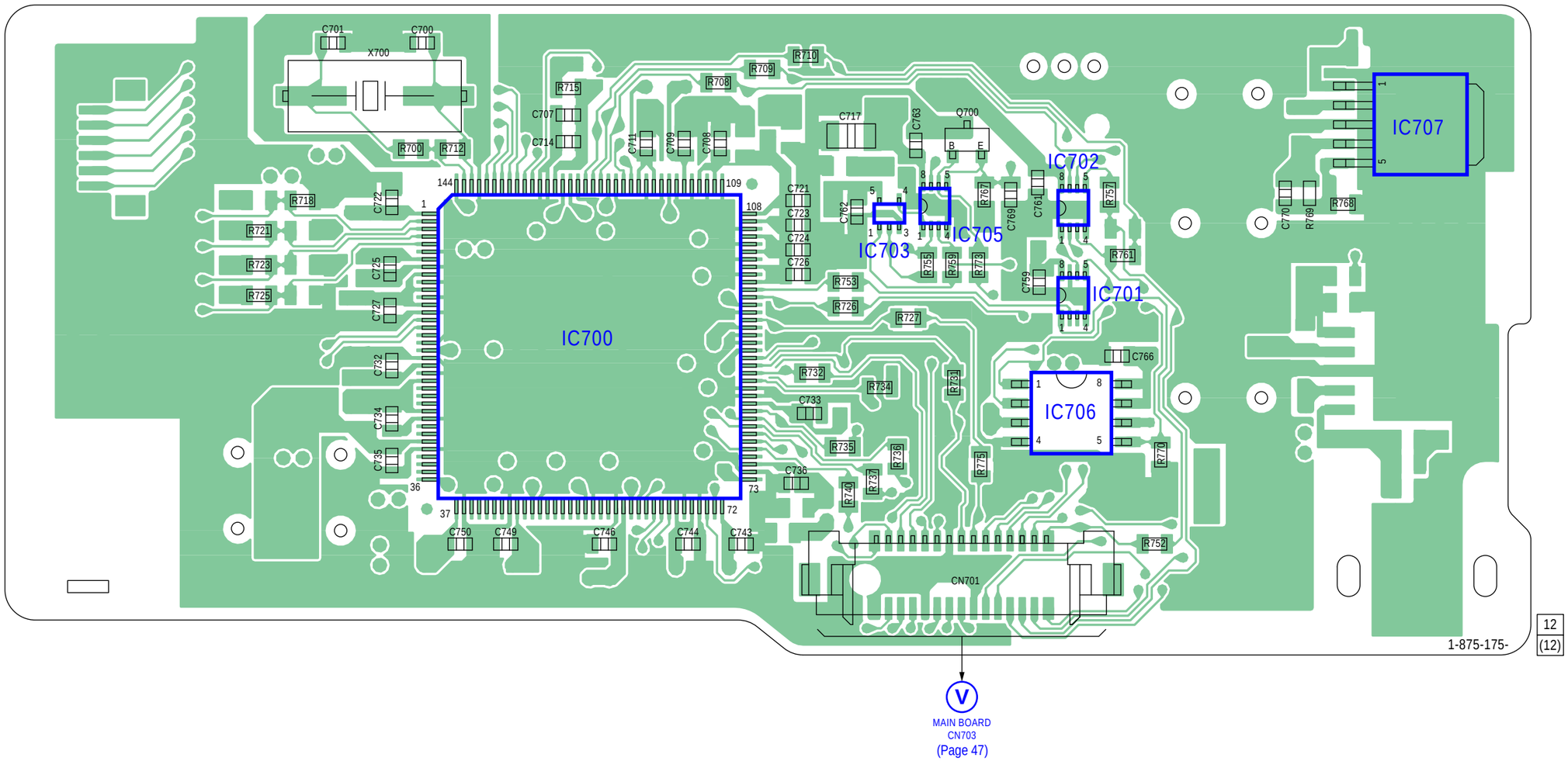


- **Semiconductor Location**

| Ref. No. | Location |
|---|---|
| IC700 | D-9 |
| IC701 | D-5 |
| IC702 | C-5 |
| IC703 | C-6 |
| IC705 | C-6 |
| IC706 | E-5 |
| IC707 | B-2 |
| Q700 | B-6 |

## 6-27. PRINTED WIRING BOARD – DSP Board (Side B) –

• See page 39 for Circuit Boards Location. • : Uses unleaded solder.

【DSP BOARD】(SIDE B)

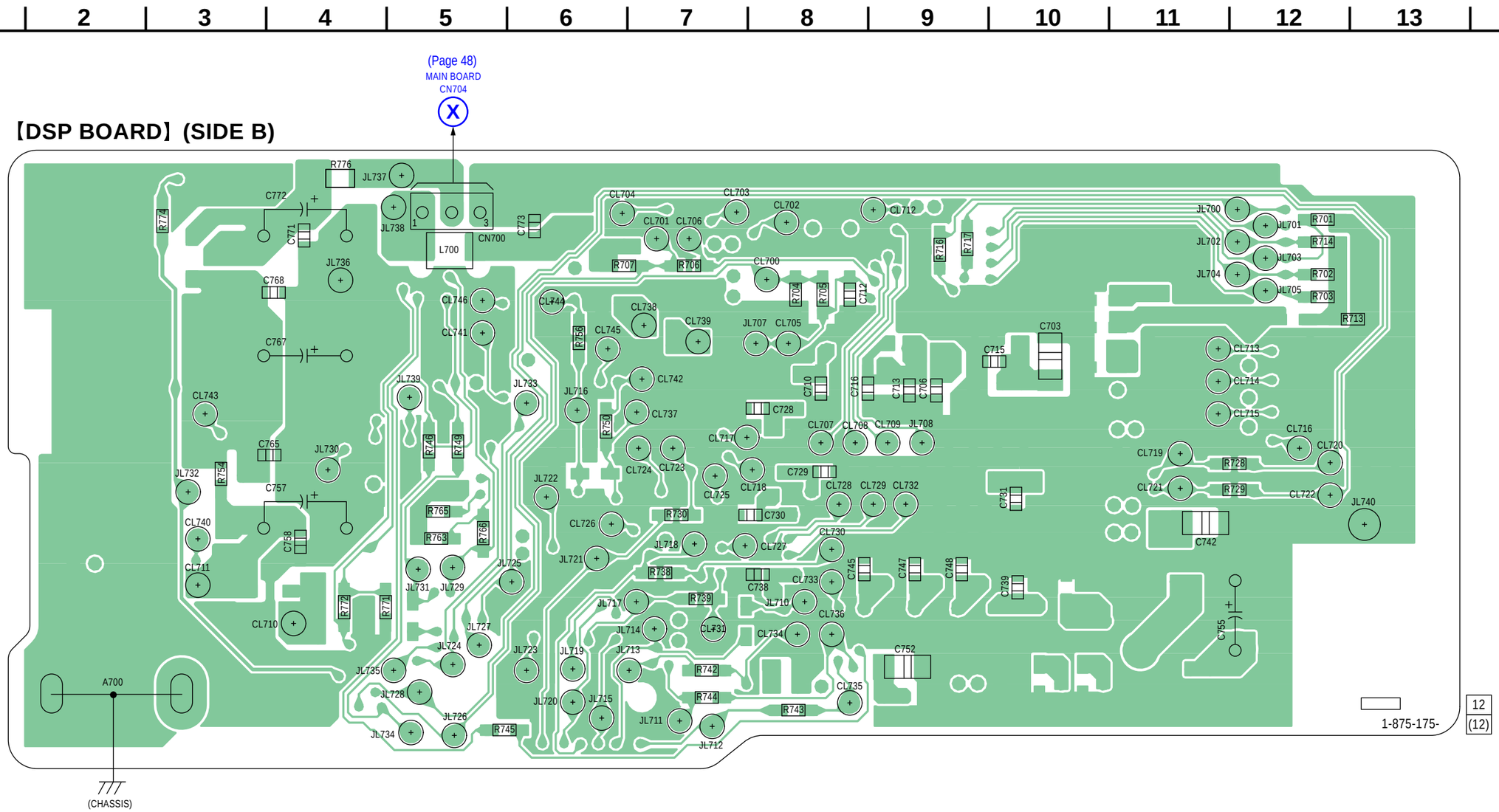

## 6-28. SCHEMATIC DIAGRAM – DSP Board –

• See page 40 for waveform. • See page 86 for IC Block Diagram. • See page 94 for IC Pin Function Description of IC700.

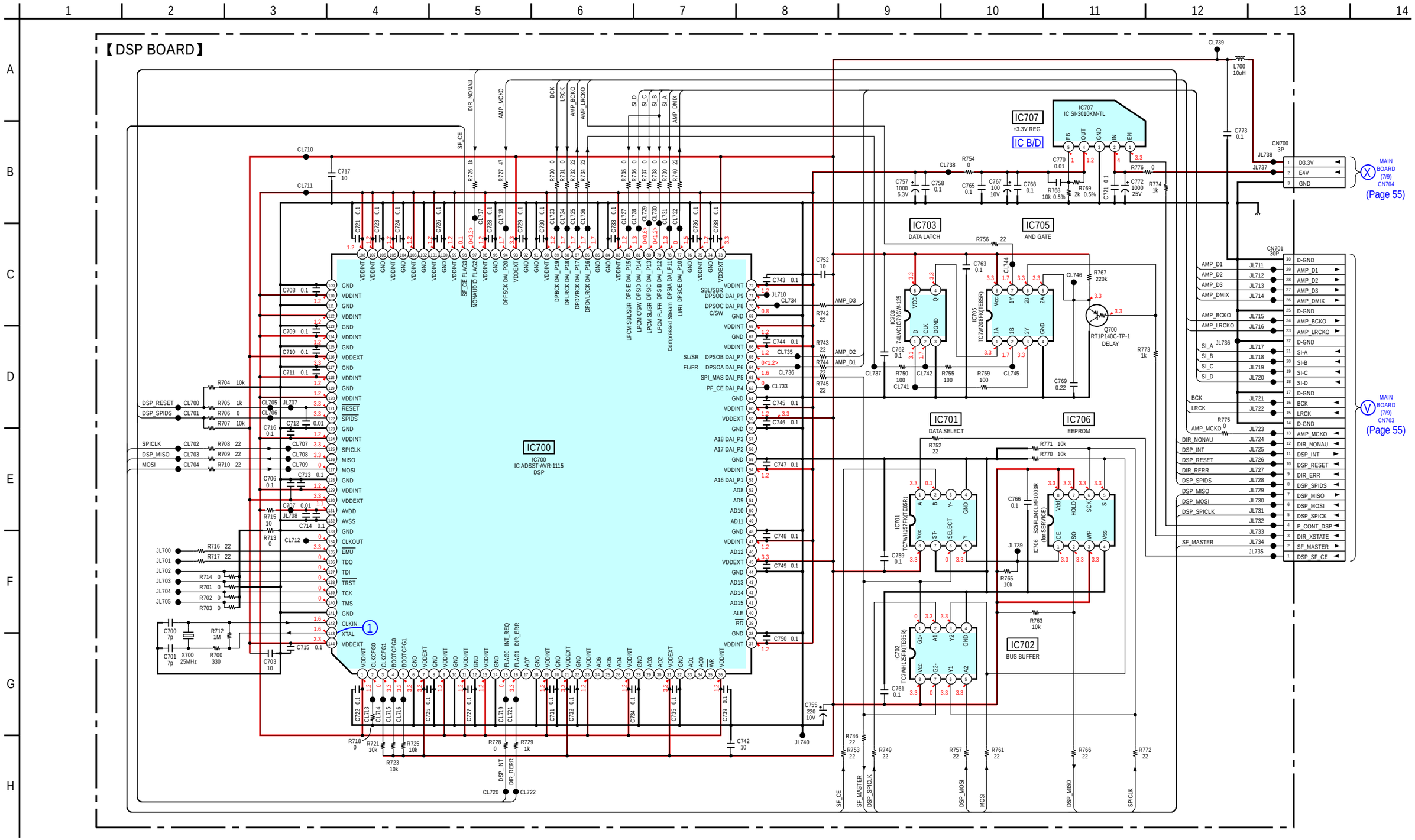

6-29. PRINTED WIRING BOARD – S-AIR-INC Board (Side A) (DZ860W/DZ870KW/DZ870W) – • See page 39 for Circuit Boards Location. • : Uses unleaded solder.

## 【S-AIR-INC BOARD】(SIDE A) (DZ860W/DZ870KW/DZ870W)

- **Semiconductor Location**

| Ref. No. | Location |
|---|---|
| (D800) | E-6 |
| (IC800) | E-9 |
| IC801 | D-4 |
| IC802 | D-8 |
| IC803 | C-4 |
| IC804 | C-5 |
| IC805 | E-6 |
| IC806 | E-9 |

( ): SIDE B

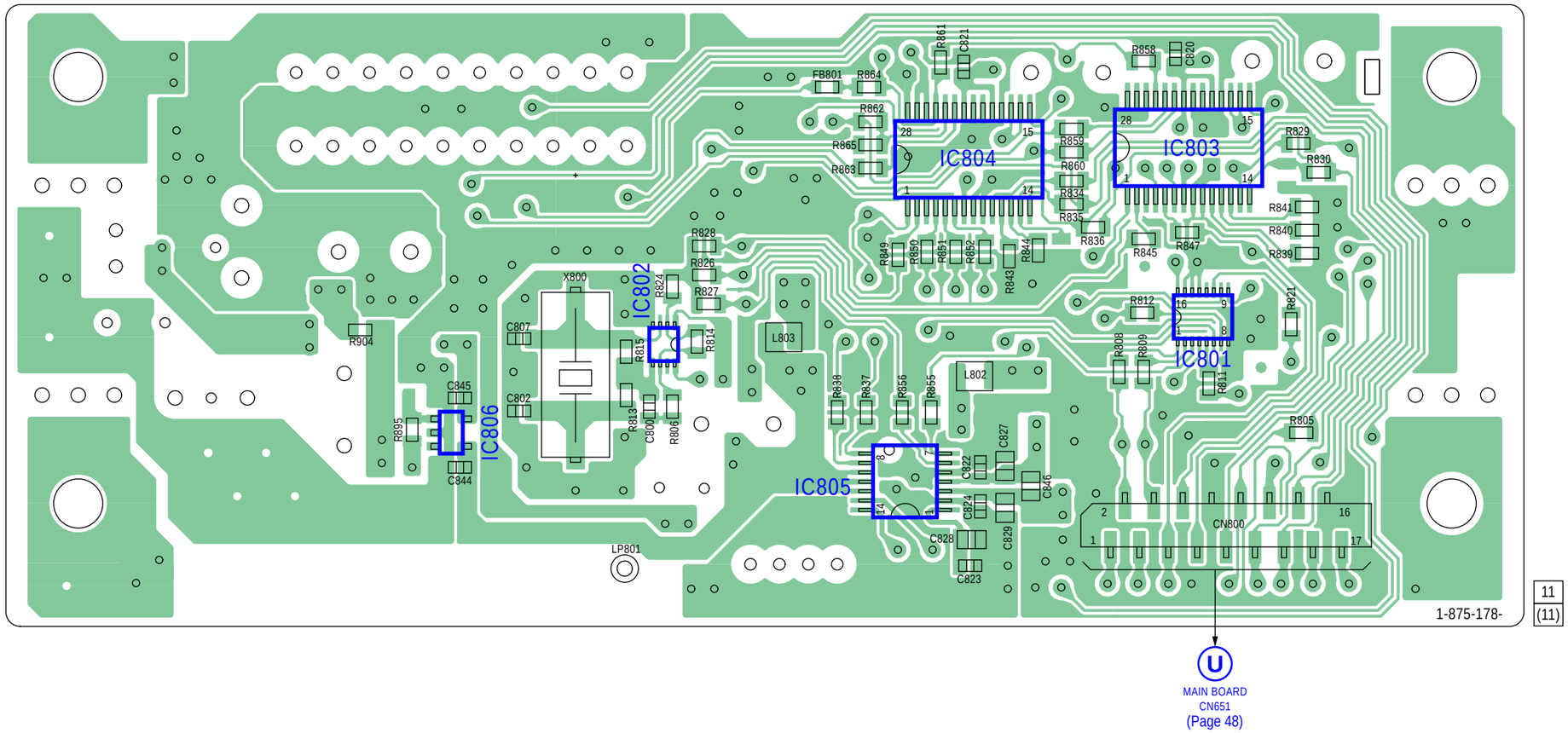


Ⓤ MAIN BOARD CN651 (Page 48)

## 6-30. PRINTED WIRING BOARD – S-AIR-INC Board (Side B) (DZ860W/DZ870KW/DZ870W) –

• See page 39 for Circuit Boards Location. • : Uses unleaded solder.

【S-AIR-INC BOARD】(SIDE B) (DZ860W/DZ870KW/DZ870W)

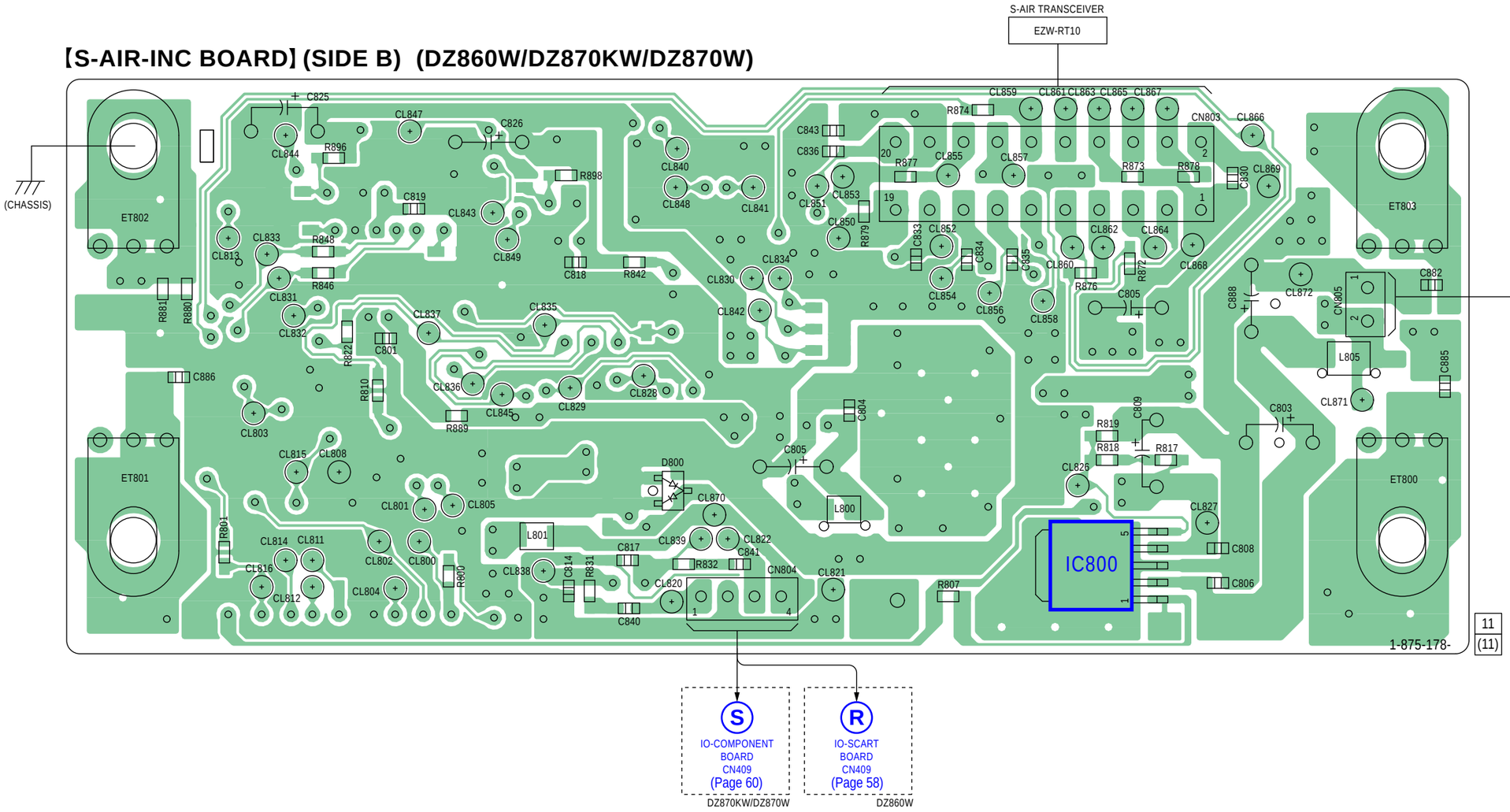

## 6-31. SCHEMATIC DIAGRAM – S-AIR-INC Board (DZ860W/DZ870KW/DZ870W) –

• See page 40 for waveforms. • See page 82, 86 for IC Block Diagrams.

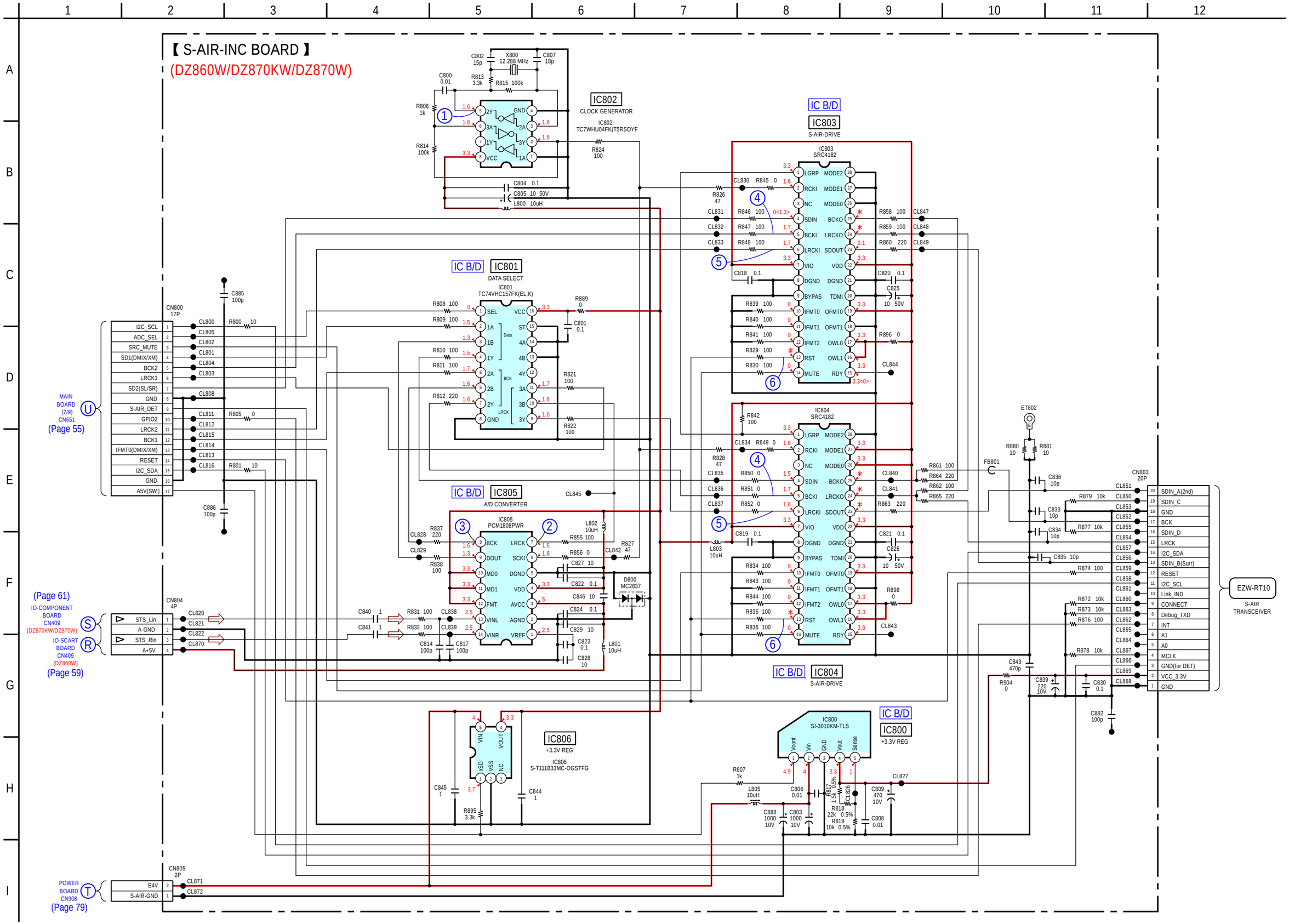

## 6-32. PRINTED WIRING BOARD – S-AIR-CON Board (DZ870M) –

• See page 39 for Circuit Boards Location. • : Uses unleaded solder.

【S-AIR-CON BOARD】(SIDE A) (DZ870M)

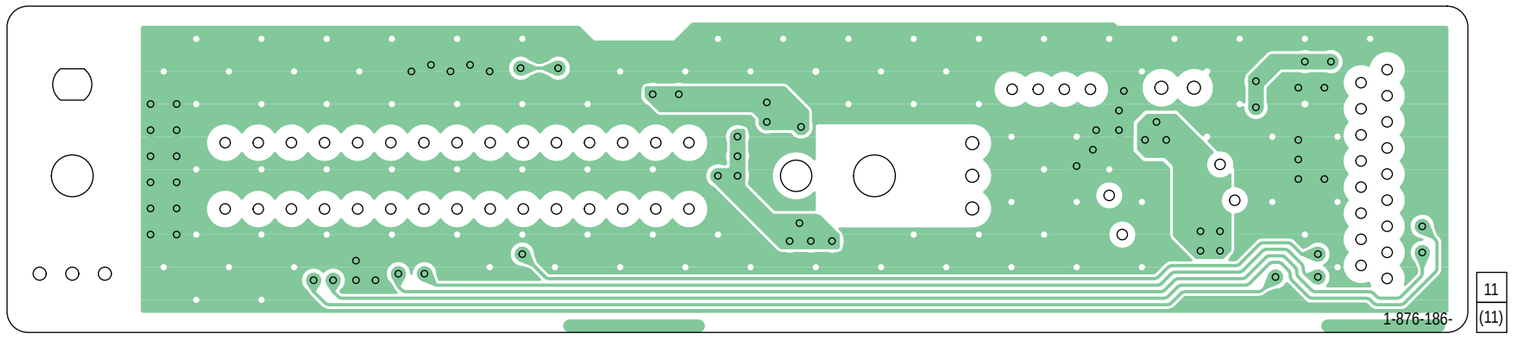


【S-AIR-CON BOARD】(SIDE B) (DZ870M)

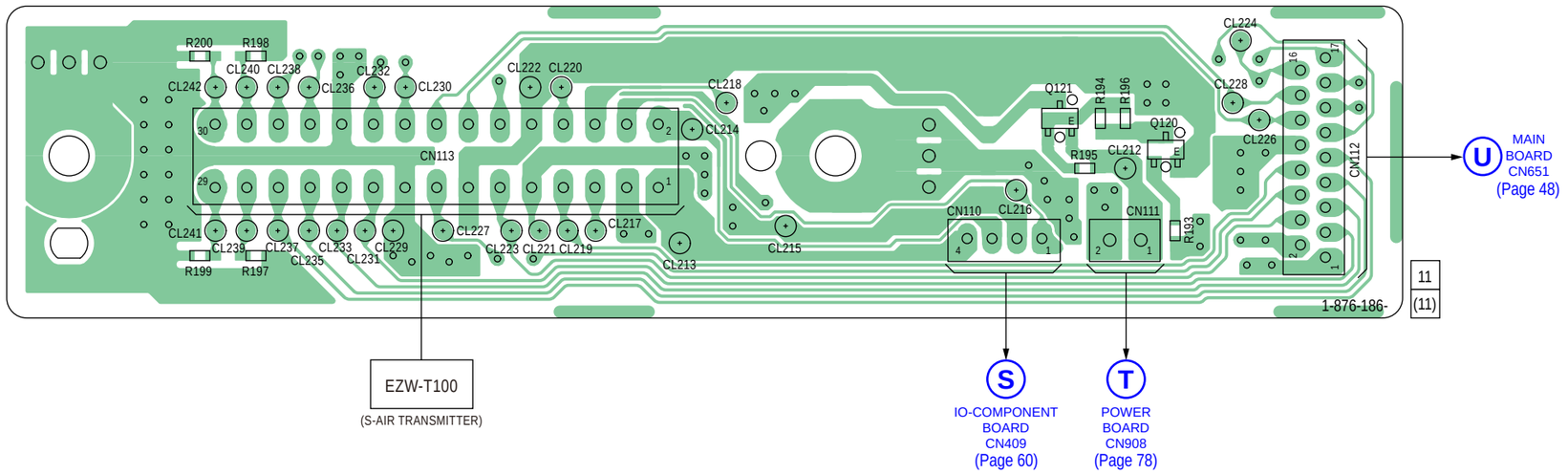

## 6-33. SCHEMATIC DIAGRAM – S-AIR-CON Board (DZ870M) –

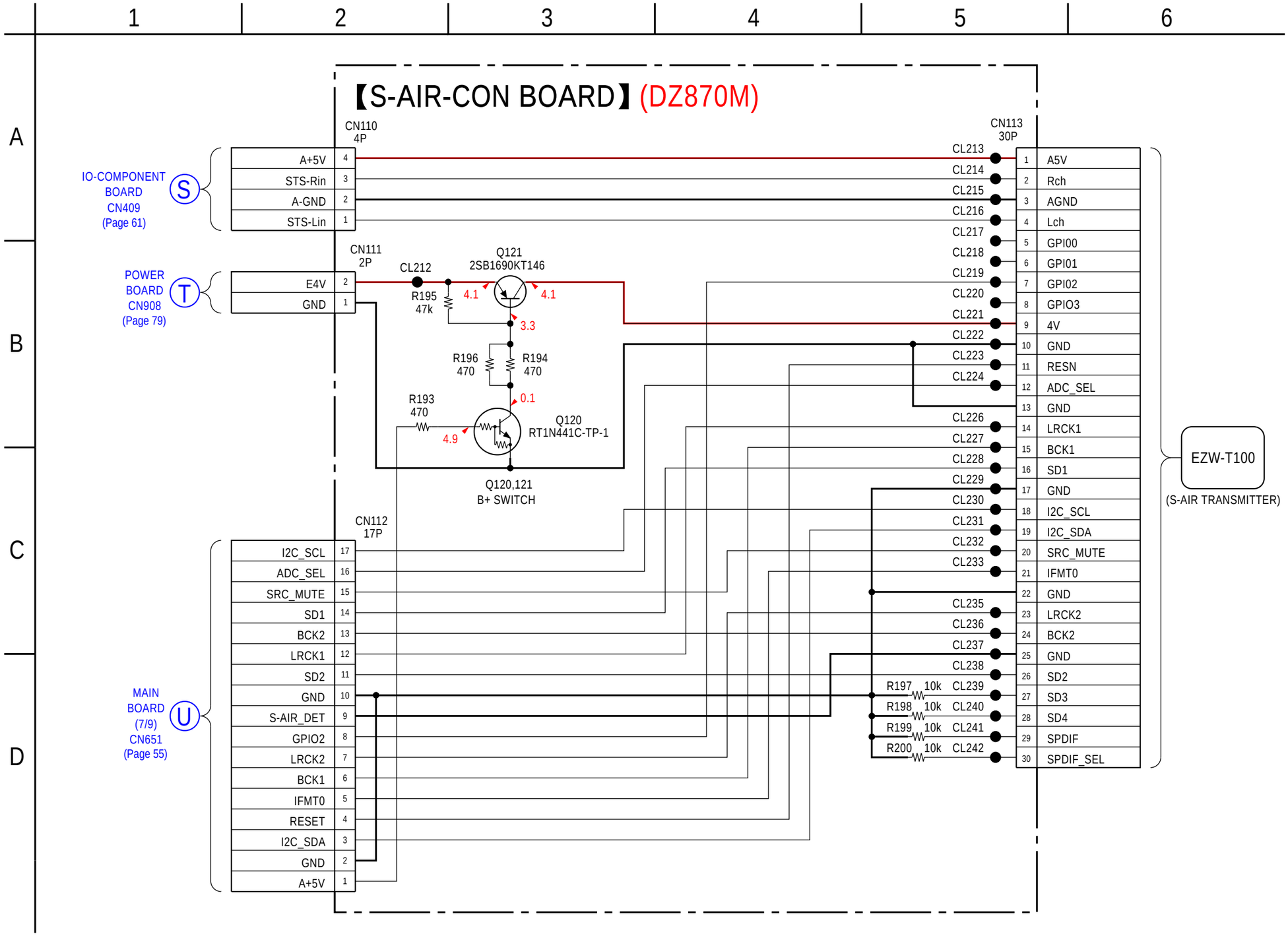

## 6-34. PRINTED WIRING BOARD – SERIPARA (DSR) Board –

• See page 39 for Circuit Boards Location. • : Uses unleaded solder.

【SERIPARA (DSR) BOARD】

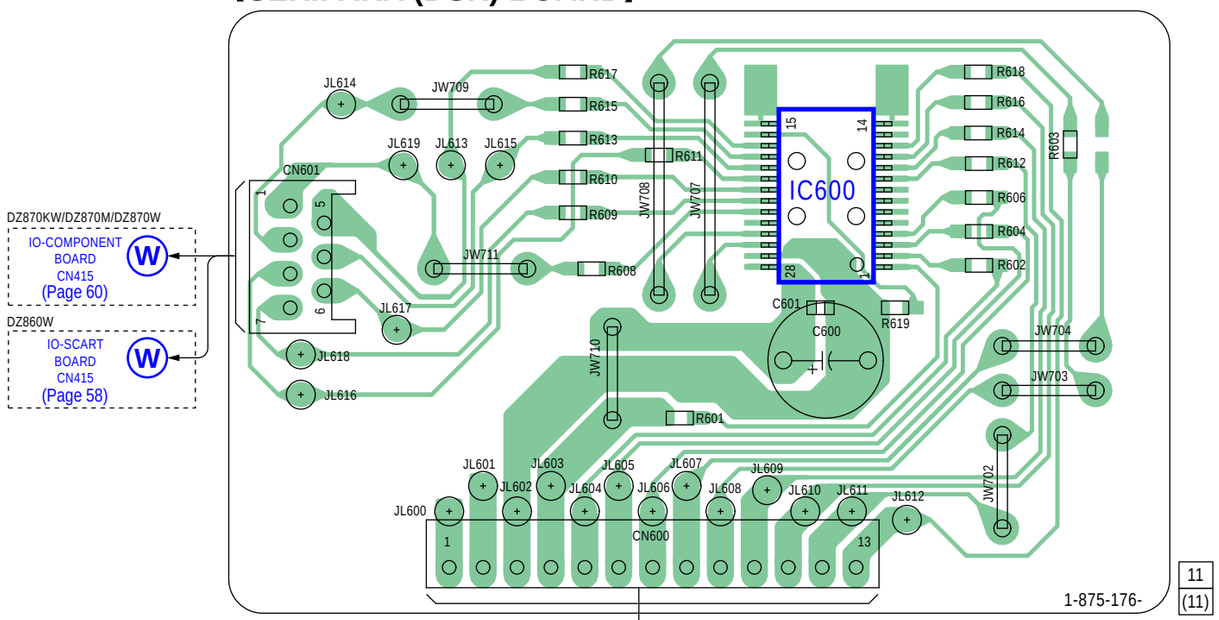

## 6-35. SCHEMATIC DIAGRAM – SERIPARA (DSR) Board –

• See page 87 for IC Block Diagram.

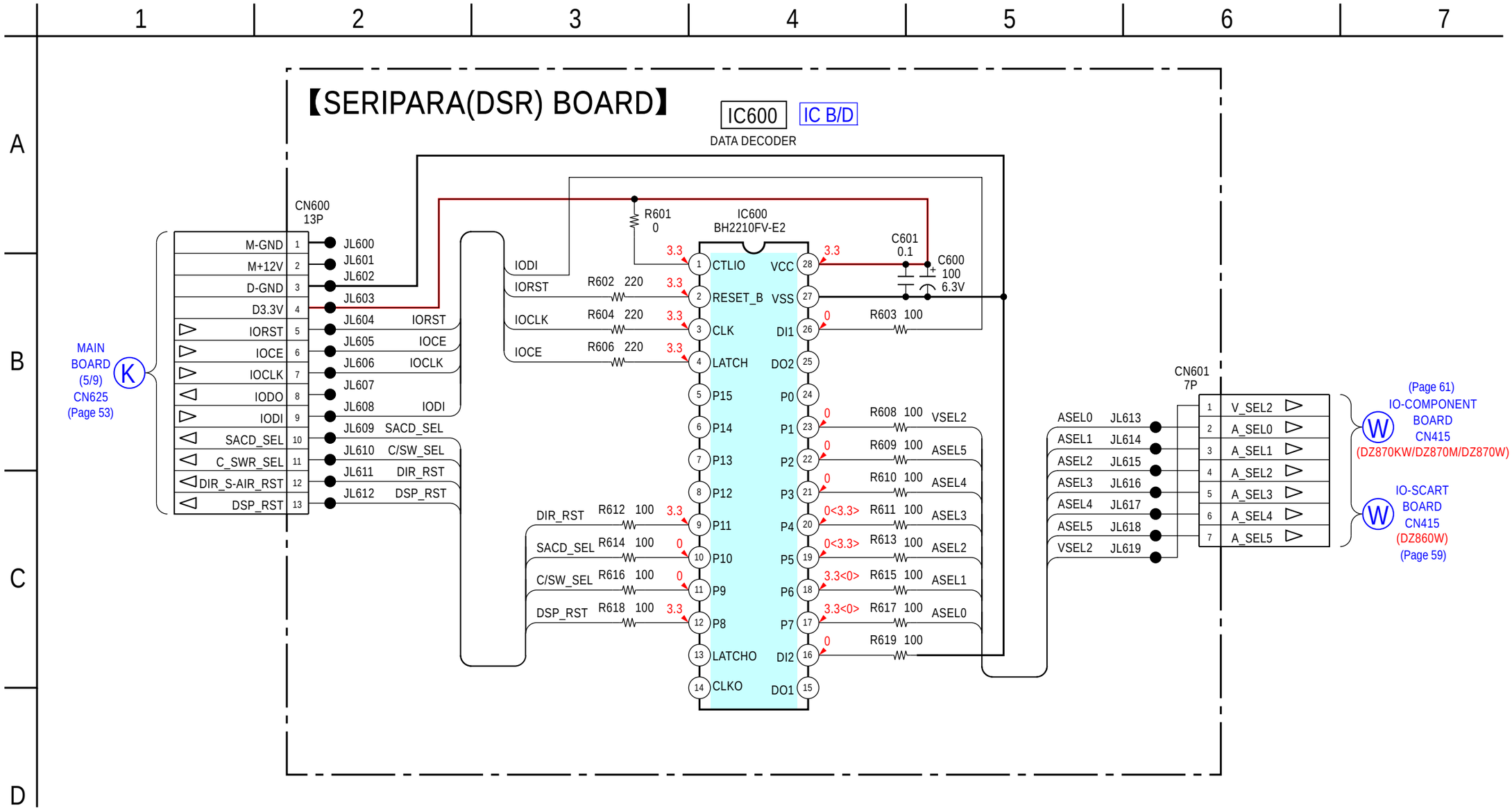

## 6-36. PRINTED WIRING BOARD – SCORE Board (DZ870KW/DZ870M) –

• See page 39 for Circuit Boards Location. • : Uses unleaded solder.

【SCORE BOARD】(DZ870KW/DZ870M)

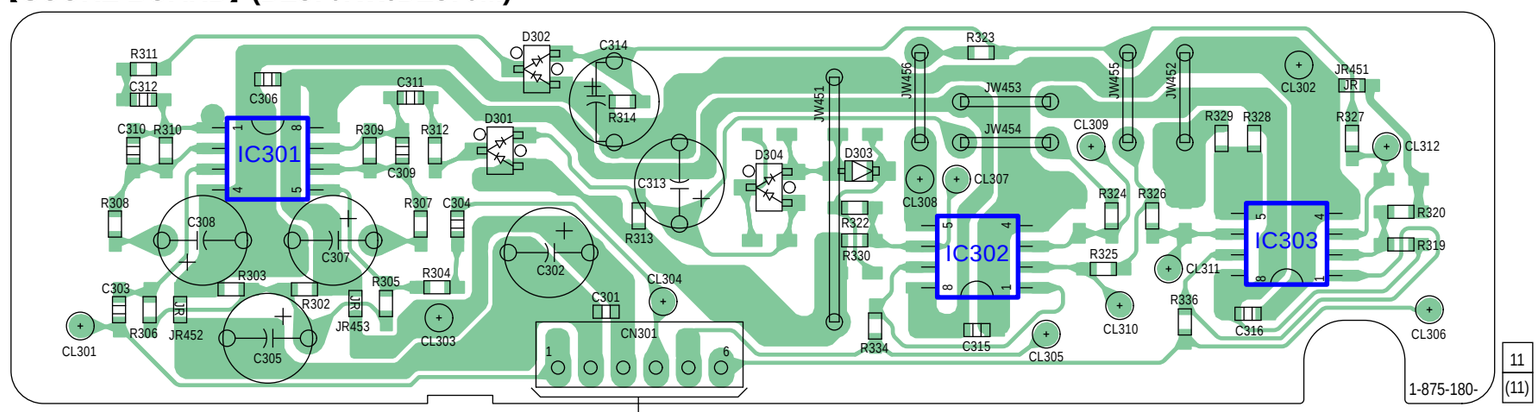


Y
IO-COMPONENT BOARD CN413
(Page 60)

• **Semiconductor Location**

| Ref. No. | Location |
|---|---|
| D301 | B-5 |
| D302 | B-5 |
| D303 | B-7 |
| D304 | B-7 |
| IC301 | B-4 |
| IC302 | C-8 |
| IC303 | C-10 |

## 6-37. SCHEMATIC DIAGRAM – SCORE Board (DZ870KW/DZ870M) –

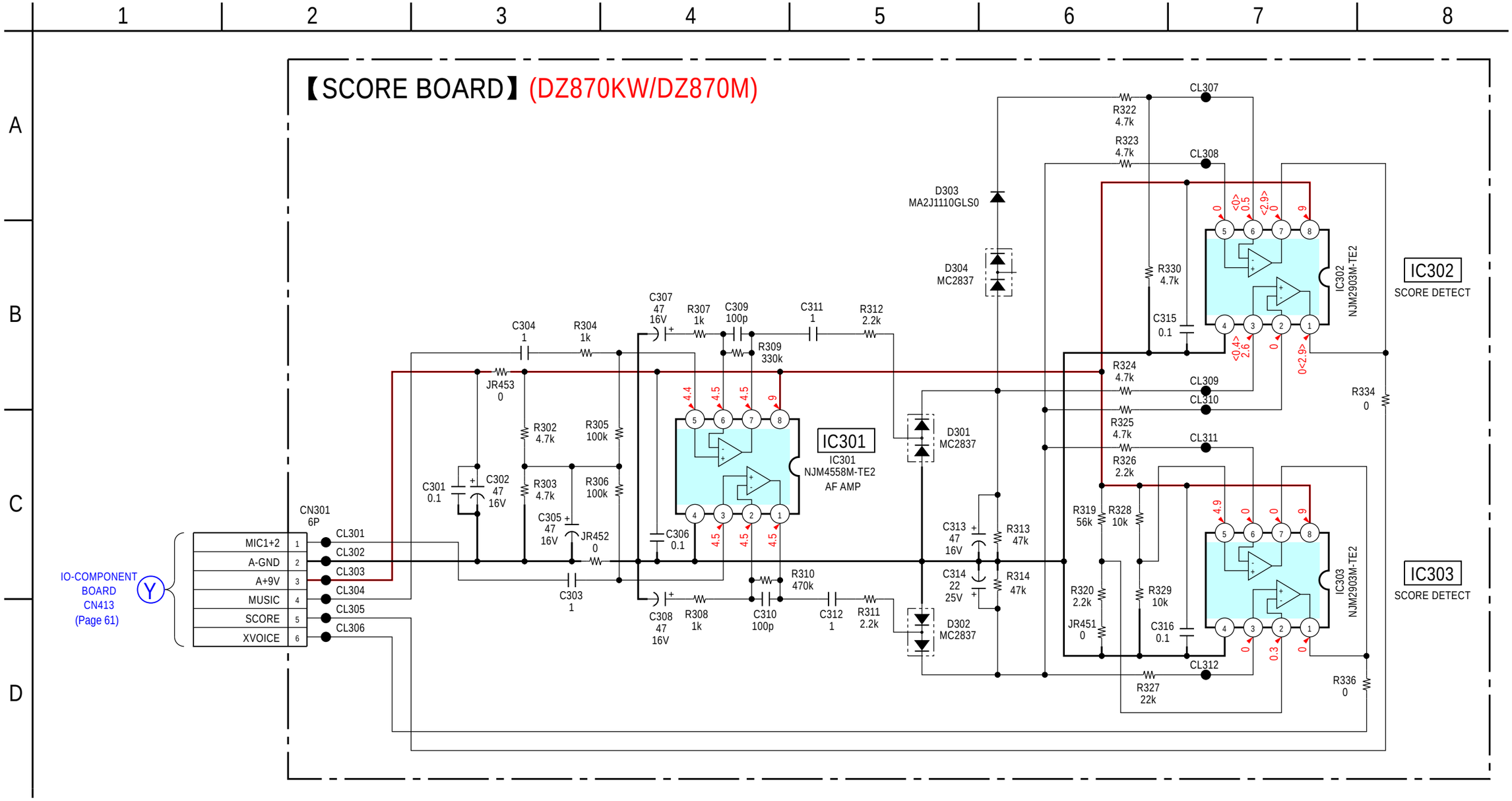

## 6-38. PRINTED WIRING BOARD – POWER Board –

• See page 39 for Circuit Boards Location. • : Uses unleaded solder.

【POWER BOARD】

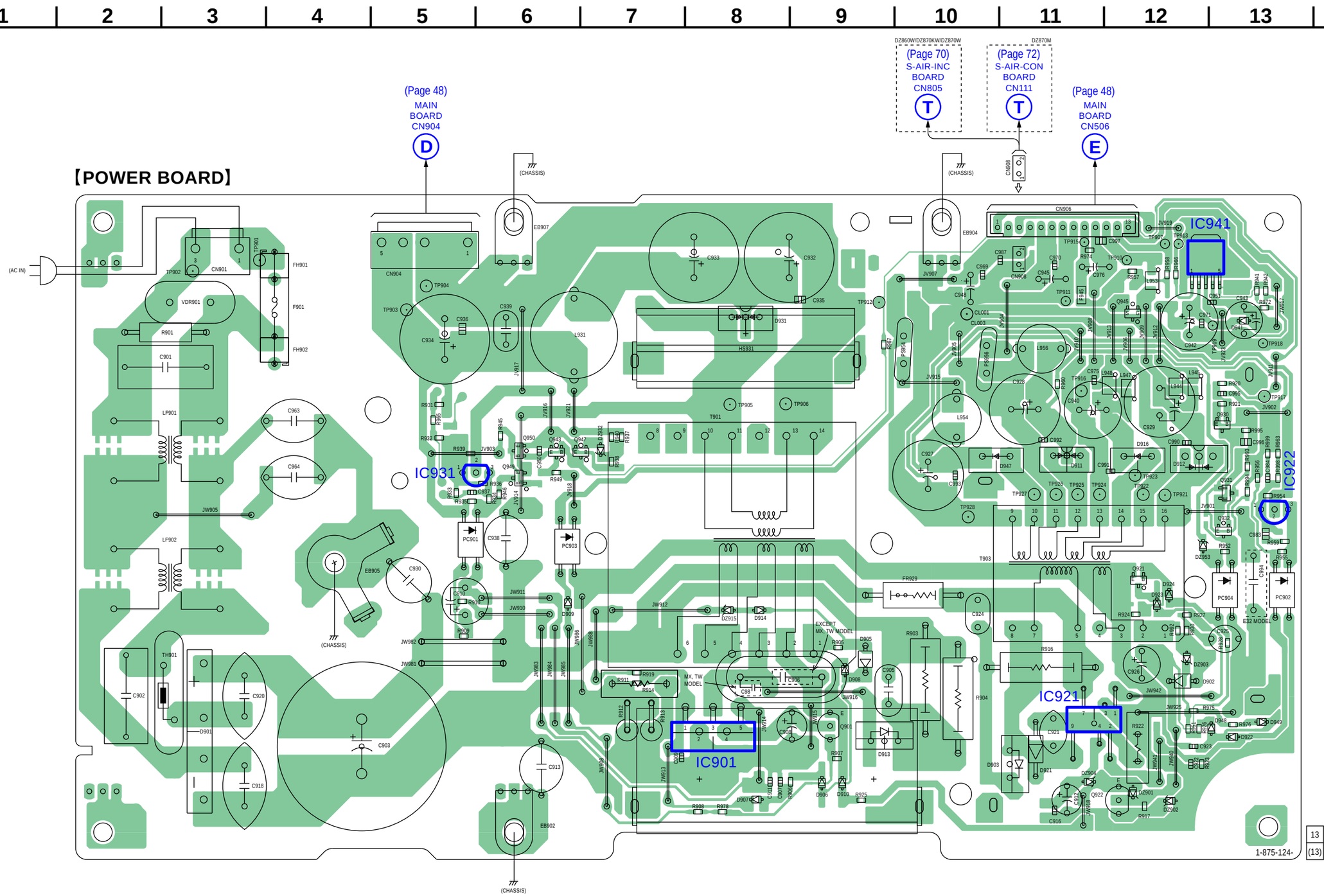


• Semiconductor Location

| Ref. No. | Location |
|---|---|
| D901 | G-3 |
| D902 | G-12 |
| D903 | H-10 |
| D905 | F-9 |
| D906 | H-9 |
| D907 | H-8 |
| D908 | G-9 |
| D909 | F-6 |
| D910 | H-9 |
| D911 | E-11 |
| D912 | E-12 |
| D913 | G-9 |
| D914 | F-8 |
| D916 | E-12 |
| D921 | H-11 |
| D922 | G-13 |
| D923 | F-12 |
| D924 | F-12 |
| D931 | C-8 |
| D941 | C-13 |
| D947 | E-11 |
| D948 | G-13 |
| D949 | G-13 |
| DZ901 | H-12 |
| DZ902 | H-12 |
| DZ903 | G-12 |
| DZ904 | H-11 |
| DZ915 | F-8 |
| DZ932 | D-7 |
| DZ953 | F-12 |
| | |
| IC901 | G-8 |
| IC921 | G-11 |
| IC922 | E-13 |
| IC931 | E-5 |
| IC941 | C-12 |
| | |
| Q901 | G-9 |
| Q921 | F-12 |
| Q922 | H-12 |
| Q930 | D-13 |
| Q931 | E-13 |
| Q932 | E-13 |
| Q943 | E-6 |
| Q945 | C-12 |
| Q947 | E-6 |
| Q949 | E-6 |
| Q950 | E-6 |

## 6-39. SCHEMATIC DIAGRAM – POWER Board –

• See page 82, 85 for IC Block Diagrams.

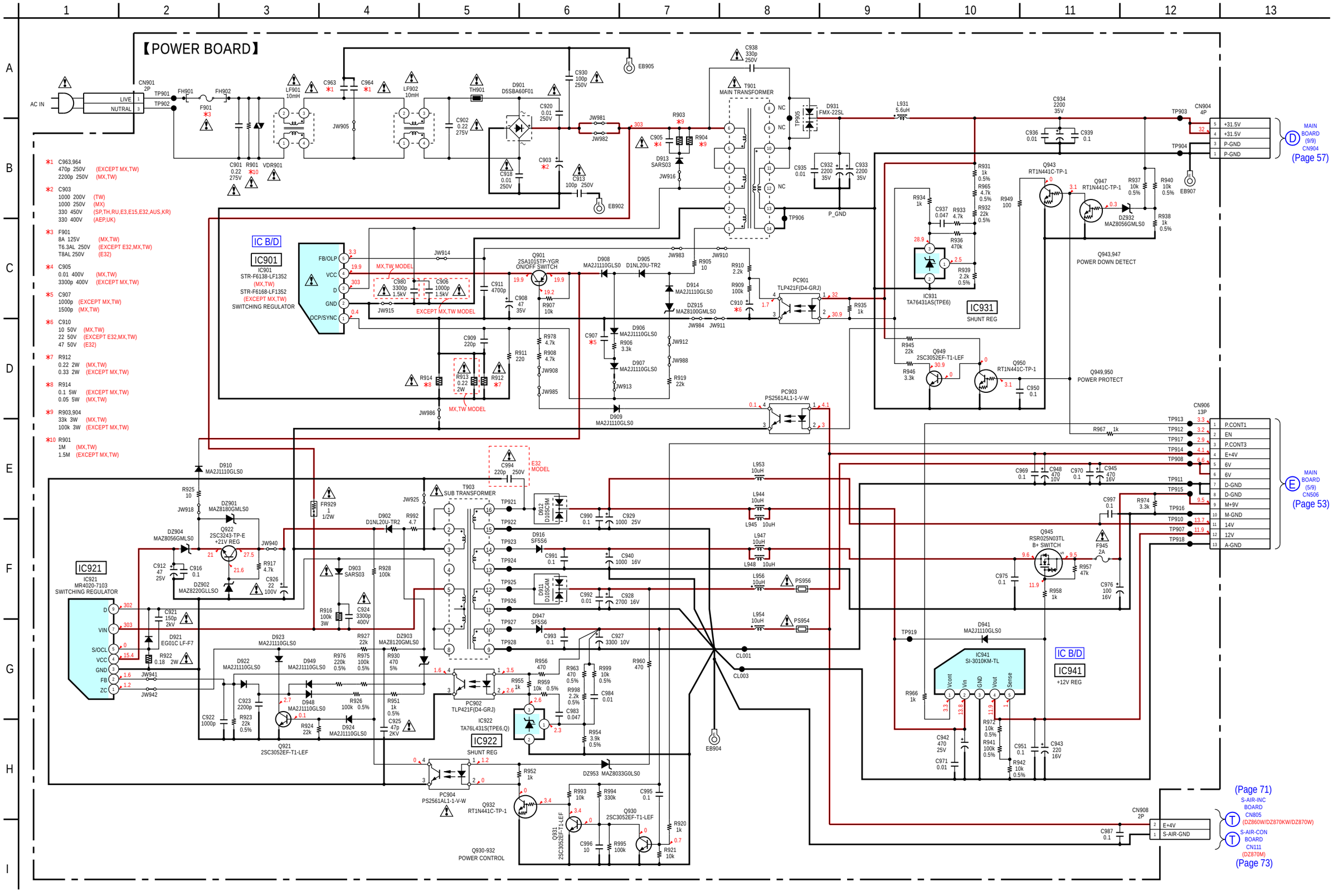

- **IC Block Diagrams**

### IC1201 FAN8036L (MAIN Board (4/9))

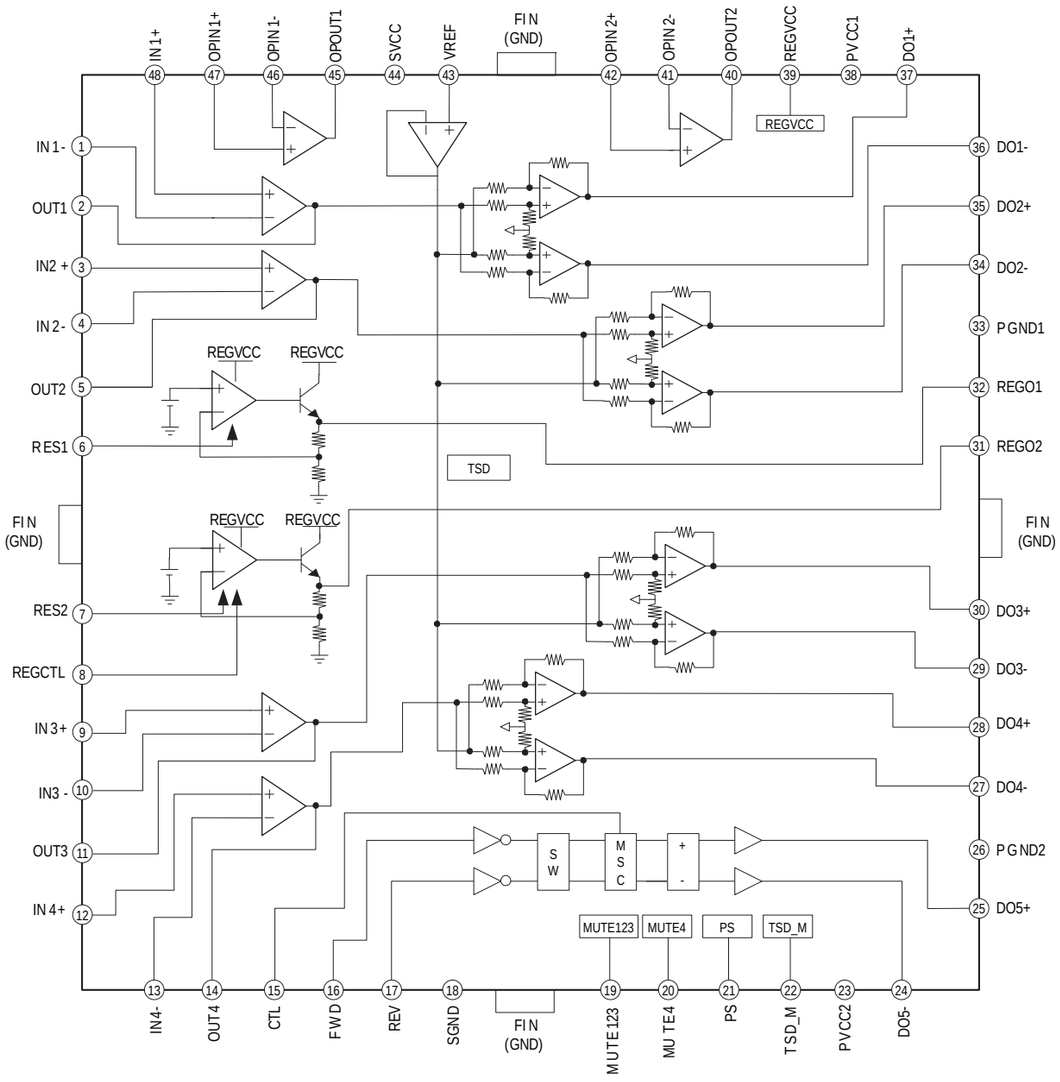


### IC3003 TC7WH157FK(TE85R) (MAIN Board (7/9))

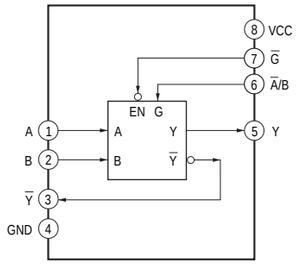


### IC3010 CDX9788AR (MAIN Board (9/9))
### IC3020 CDX9788AR (MAIN Board (9/9)) (DZ870M)
### IC3030 CDX9788AR (MAIN Board (8/9))

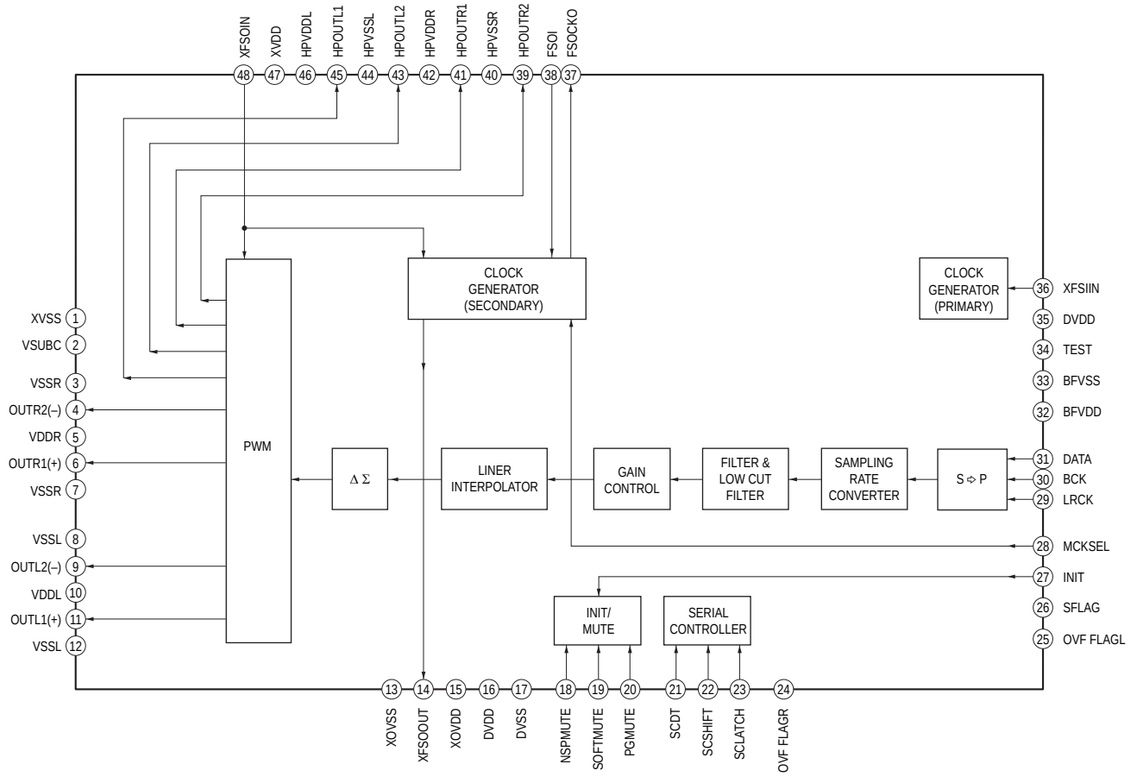

## IC702 LC890561W (MAIN Board (7/9))

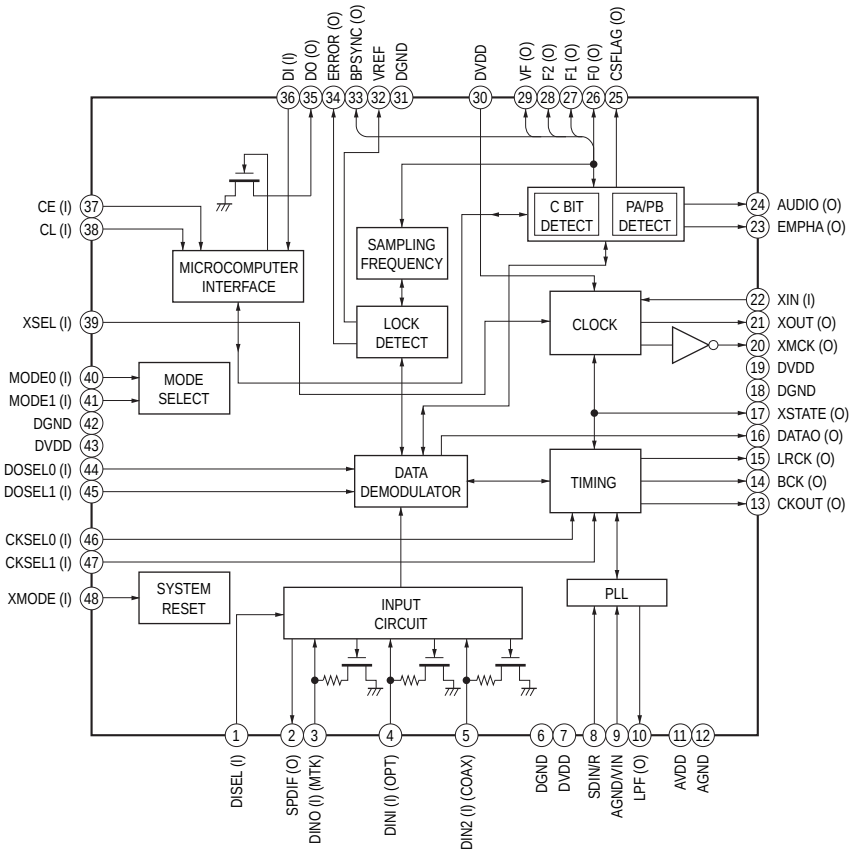


## IC507 TK11150CSCL-G (MAIN Board (5/9))
## IC1105 TK11133CSCL-G (MAIN Board (1/9))
## IC1107 TK11133CSCL-G (MAIN Board (1/9))
## IC1707 TK11150CSCL-G (MAIN Board (3/9))
## IC1708 TK11133CSCL-G (MAIN Board (3/9))
## IC3050 TK11118CSCL-G (MAIN Board (9/9))

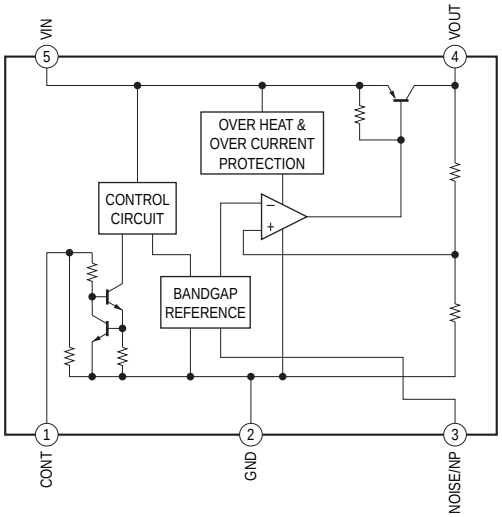

**IC201 SI-3010KM-TL (MAIN Board (6/9))**
**IC504 SI-3010KM-TL (MAIN Board (5/9))**
**IC505 SI-3010KM-TL (MAIN Board (5/9))**
**IC506 SI-3010KM-TL (MAIN Board (5/9))**
**IC941 SI-3010KM-TL (POWER Board)**

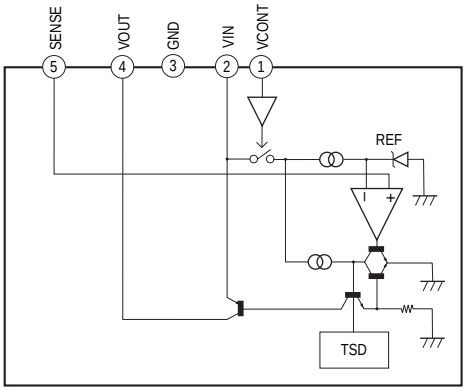


**IC707 PCM1808PWR (MAIN Board (7/9))**
**IC805 PCM1808PWR (S-AIR-INC Board)**

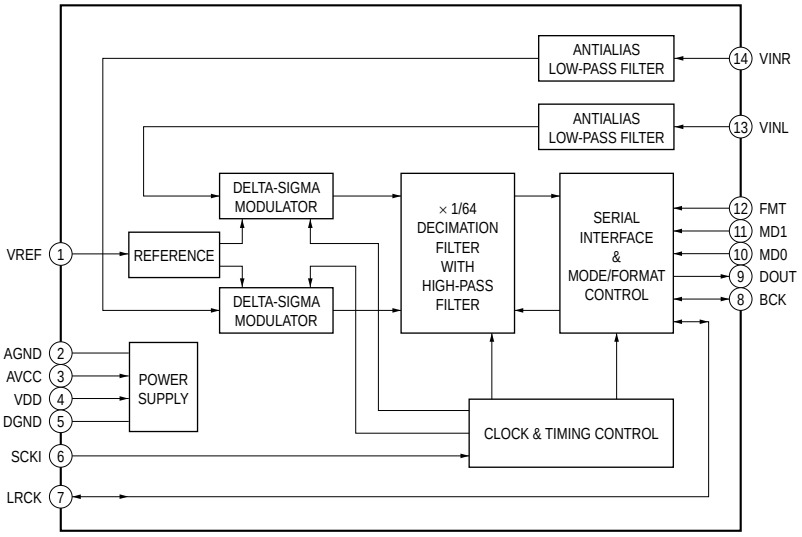

**IC3100 CXD9883M (MAIN Board (9/9))**
**IC3150 CXD9883M (MAIN Board (9/9))**
**IC3200 CXD9883M (MAIN Board (9/9)) (DZ870M)**
**IC3250 CXD9883M (MAIN Board (9/9)) (DZ870M)**
**IC3300 CXD9883M (MAIN Board (8/9))**
**IC3400 CXD9883M (MAIN Board (8/9))**
**IC3500 CXD9883M (MAIN Board (8/9))**

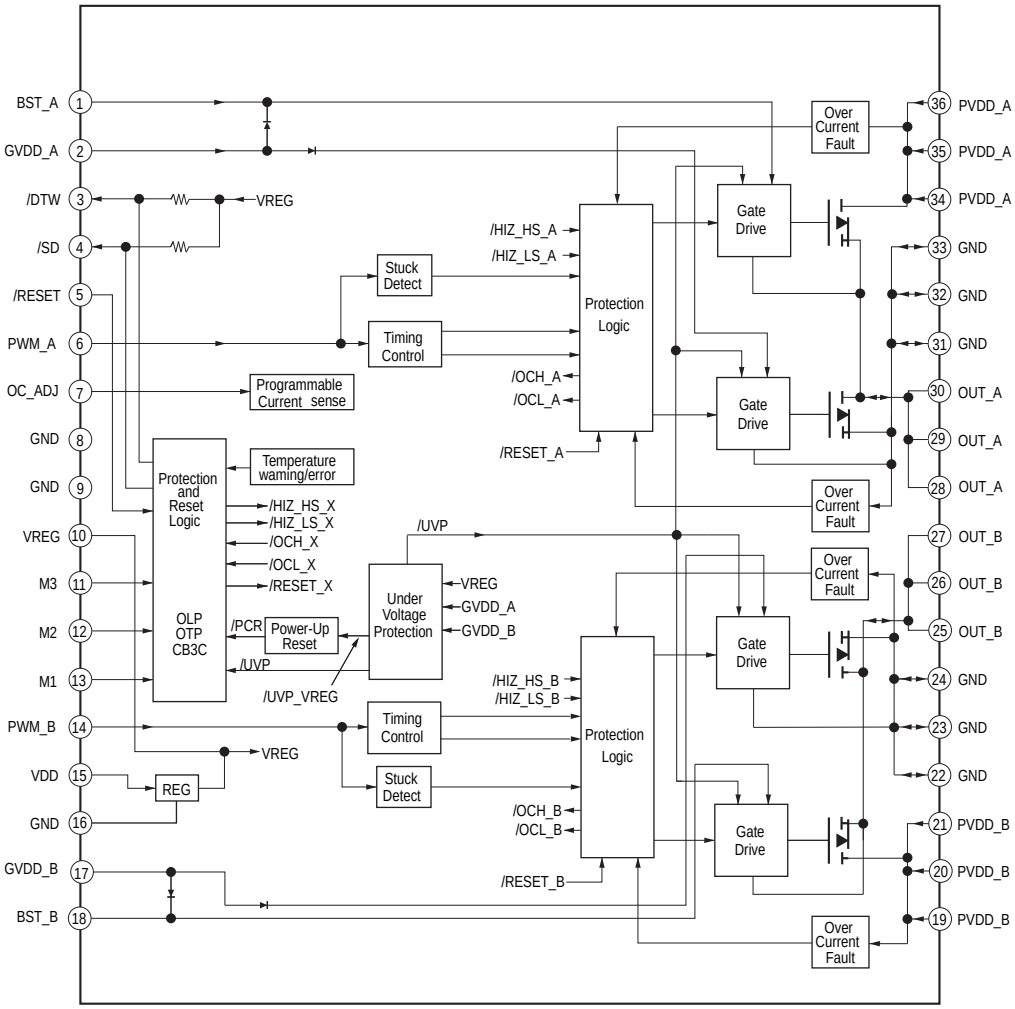

**IC400 MM1758AFBE (IO-SCART Board (DZ860W))**
**IC404 MM1758AFBE (IO-COMPONENT Board (DZ870KW/DZ870M/DZ870W))**

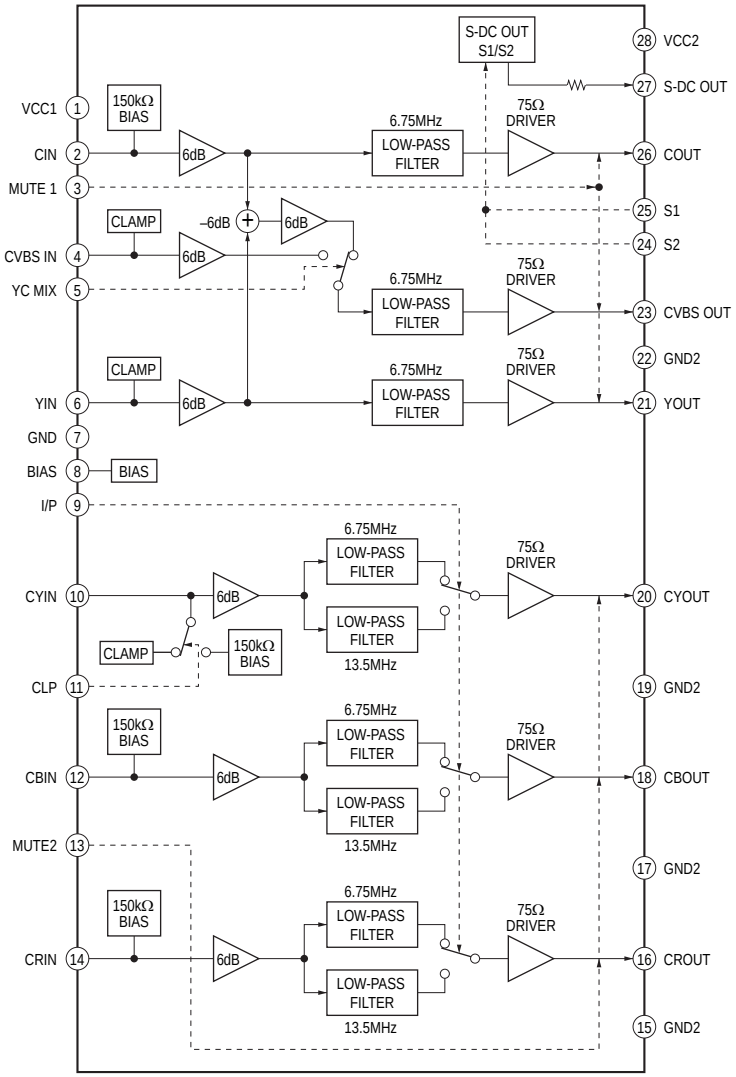


**IC407 MC14052BDR2 (IO-SCART Board (DZ860W))**
**IC409 MC14052BDR2 (IO-SCART Board (DZ860W))**
**IC411 MC14052BDR2 (IO-SCART Board (DZ860W))**
**IC407 MC14052BDR2 (IO-COMPONENT Board (DZ870KW/DZ870M/DZ870W))**
**IC409 MC14052BDR2 (IO-COMPONENT Board (DZ870KW/DZ870M/DZ870W))**
**IC411 MC14052BDR2 (IO-COMPONENT Board (DZ870KW/DZ870M/DZ870W))**

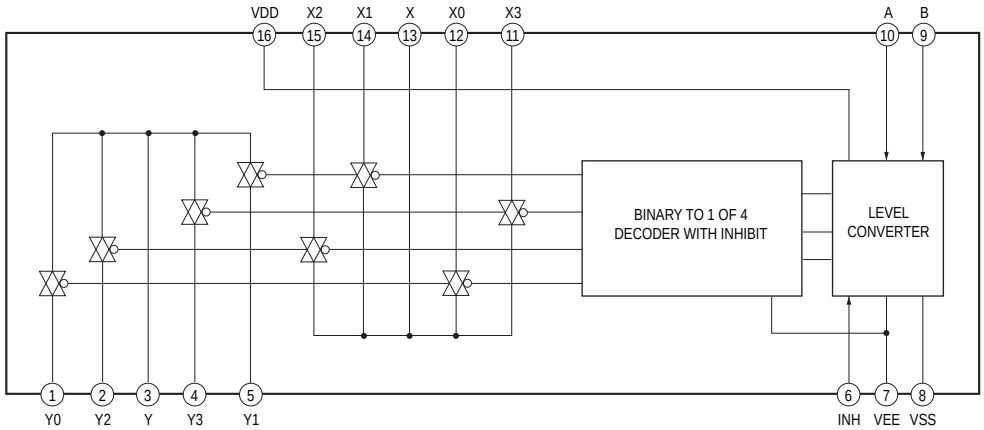

**IC901 STR-F6138-LF1352 (POWER Board) (MX, TW)**
**IC901 STR-F6168-LF1352 (POWER Board) (EXCEPT MX, TW)**

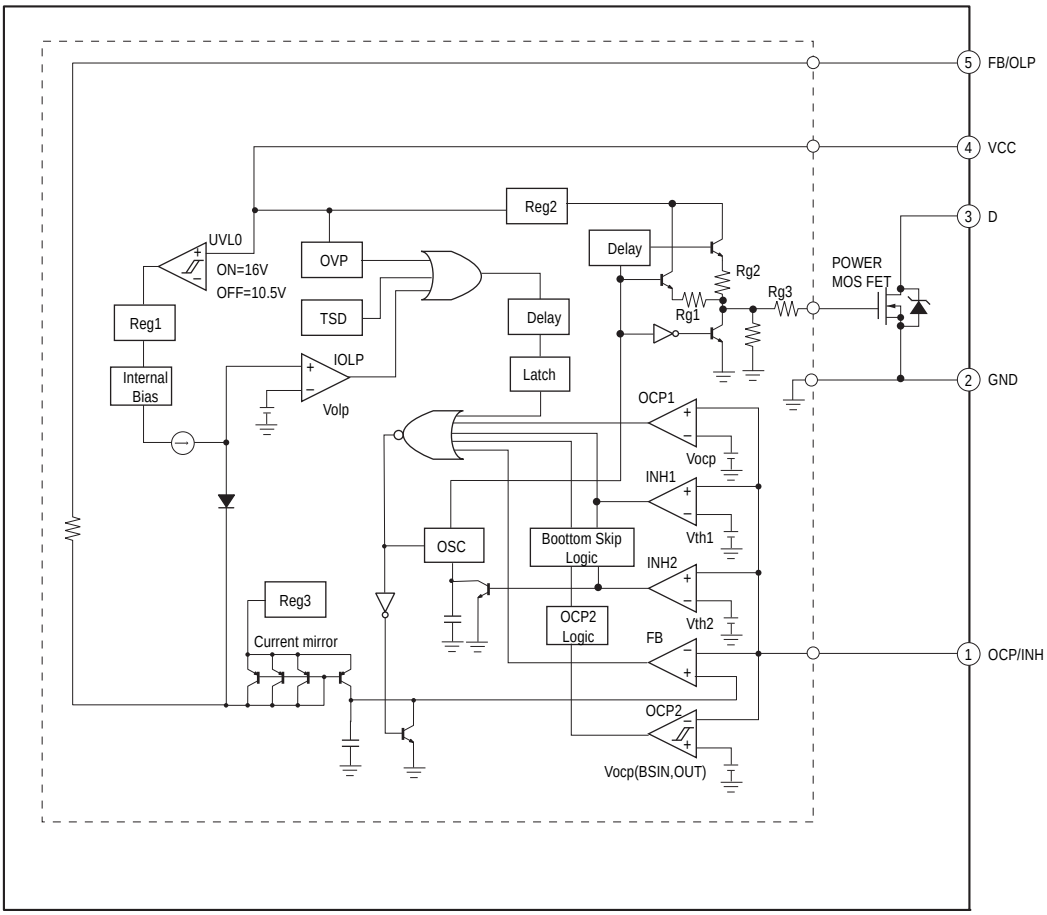

### IC800 SI-3010KM-TLS (S-AIR-INC Board)
### IC707 SI-3010KM-TLS (DSP Board)

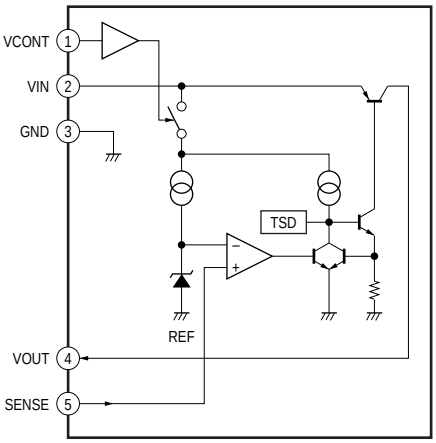


### IC801 TC74VHC157FK(EL,K) (S-AIR-INC Board)

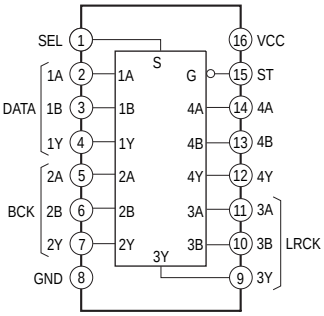


### IC803 SRC4182 (S-AIR-INC Board)
### IC804 SRC4182 (S-AIR-INC Board)

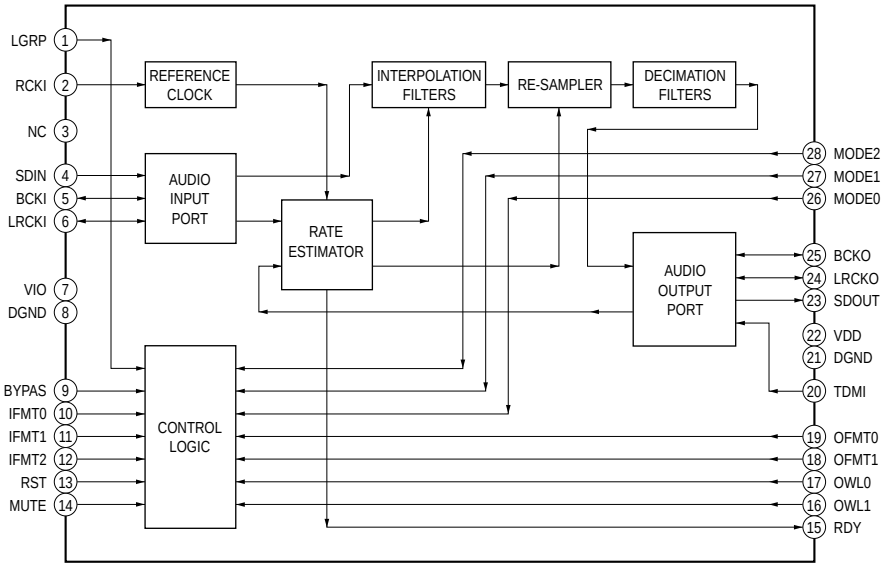

## IC600 BH2210FV-E2 (SERIPARA Board)

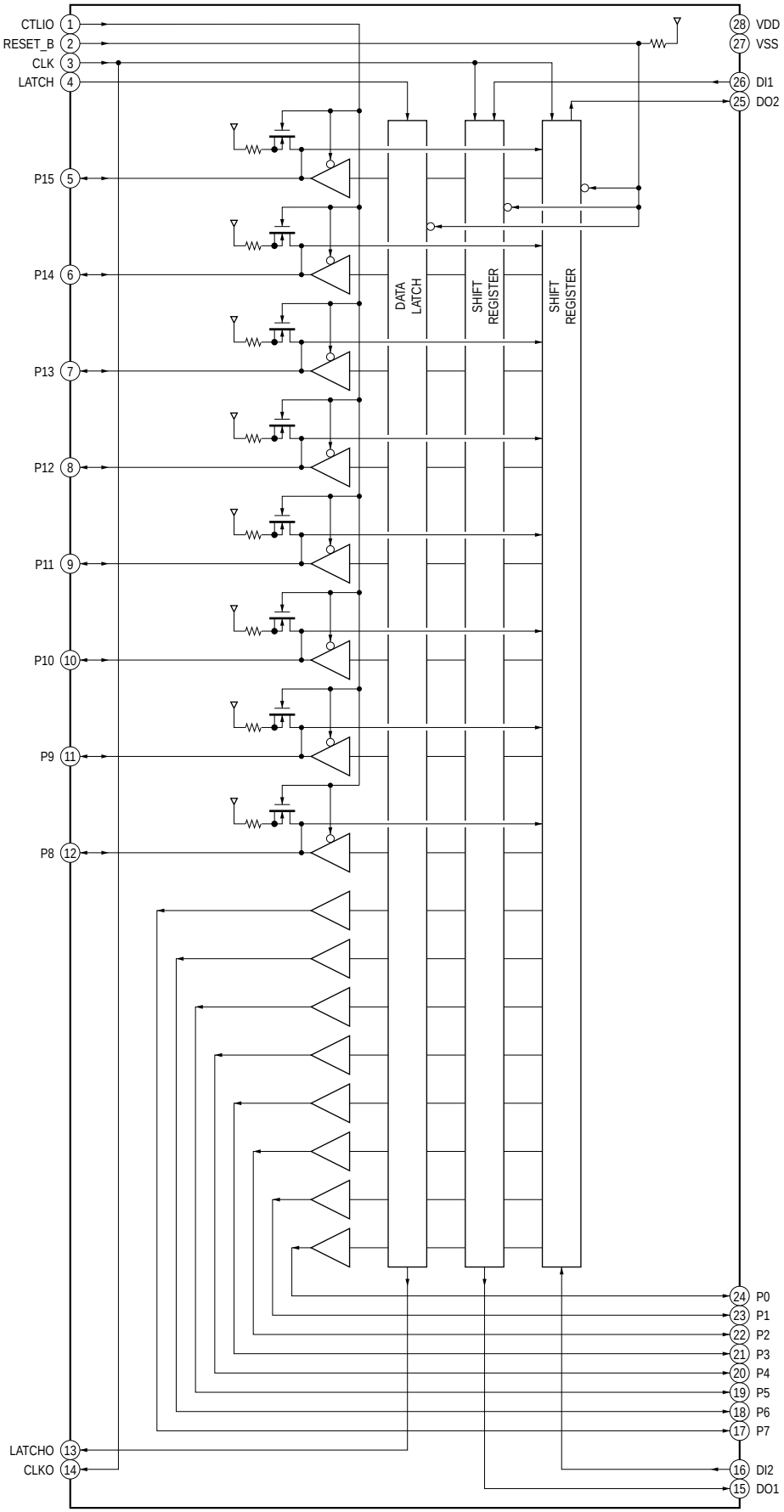

**• IC Pin Function Description**

**MAIN BOARD (2/9) IC1101 CXD9917R**

**(CD/DVD RF AMP, FOCUS/TRACKING ERROR AMP, DVD SYSTEM CONTROL, DIGITAL SERVO PROCESSOR, DIR/USB CONTROL)**

| Pin No. | Pin Name | I/O | Description |
|---|---|---|---|
| 1 | OSN | — | RF offset cancellation capacitor connecting terminal |
| 2 | RFGC | I | RF AGC loop capacitor connecting terminal |
| 3 | IREF | I | Current reference setting terminal |
| 4 | AVDD3 | — | Power supply (VDD3.3V) |
| 5 | AGND | — | Ground |
| 6 | DVDA | I | AC coupled input path A |
| 7 | DVDB | I | AC coupled input path B |
| 8 | DVDC | I | AC coupled input path C |
| 9 | DVDD | I | AC coupled input path D |
| 10 | DVDRFIP | I | DC coupled DVD RF signal input RFIP |
| 11 | MA | I | DC coupled main-beam RF signal input A |
| 12 | MB | I | DC coupled main-beam RF signal input B |
| 13 | MC | I | DC coupled main-beam RF signal input C |
| 14 | MD | I | DC coupled main-beam RF signal input D |
| 15 | SA | — | Not used (Open) |
| 16 | SB | — | Not used (Open) |
| 17 | TNI | I | DC coupled main-beam RF signal input E |
| 18 | TPI | I | DC coupled main-beam RF signal input F |
| 19 | MDI1 | I | Laser power monitor input |
| 20 | MDI2 | I | Laser power monitor input |
| 21 | LDO2 | O | Laser diode (DVD) drive signal output |
| 22 | LDO1 | O | Laser diode (CD) drive signal output |
| 23 | SVDD3 | — | Power supply (RF+3.3V) |
| 24 | CSO | O | Not used (Open) |
| 25 | RFLVL | O | RFRP low pass output |
| 26 | SGND | — | Ground |
| 27 | V2REFO [2.8V] | O | Reference voltage (2.8V) output |
| 28 | V20 [2.0V] | O | Reference voltage (2.0V) output |
| 29 | VREFO [1.4V] | O | Reference voltage (1.4V) output |
| 30 | FEO | O | Focus error monitor output |
| 31 | TEO | O | Tracking error monitor output |
| 32 | TEZISLV | O | TE Slicing Level input |
| 33 | OP_OUT | O | Op amp output |
| 34 | OP_INN | I | Op amp negative input |
| 35 | OP_INP | I | Spindle feedback signal input |
| 36 | DMO | O | Disc motor control PWM output |
| 37 | FMO | O | Feed motor control PWM output |
| 38 | TROPENPWM | O | Tray PWM output/Tray open output |
| 39 | IOPMON | I | Iop Monitor input |
| 40 | TRO | O | Tracking servo control signal output |
| 41 | FOO | O | Focus servo control signal output |
| 42 | AGND18 | — | Ground |
| 43 | AVDD18 | — | Power supply (+1.8V) |
| 44 | USB_DP | I/O | USB port serial data input/output |
| 45 | USBDM | I/O | USB port serial data input/output |
| 46 | USB_VDD3 | — | USB power supply (+3.3V) |
| 47 | USB_VSS | — | USB ground |
| 48 | PAD_VRT | — | Not used |
| 49 | USB_VDD18 | — | Power supply (+1.8V) |
| 50 | USB_VSS | I | Ground |
| 51 | DIR_ERROR/NC | I | DIR PLL error signal input |
| 52 | DIR_AUDIO/NC | I | DIR audio signal input (Not used in this set) |

| Pin No. | Pin Name | I/O | Description |
|---|---|---|---|
| 53 | LIMITSW | I | LIMIT SW signal input |
| 54 | MSW | O | DVD/CD PD –VR select signal output |
| 55 | DVDD18 | — | Power supply (+1.8V) |
| 56 to 62 | HA2 to HA8 | O | Flash ROM address bus A2 to A8 output |
| 63, 64 | HA18, HA19 | O | Flash ROM address bus A18, A19 output |
| 65 | DVDD3 | — | Power supply (+3.3V) |
| 66 | XWR | O | Flash ROM write signal output |
| 67 to 74 | HA16 to HA9 | O | Flash ROM address bus A16 to A9 output |
| 75 | HA20 | | Flash ROM address bus A20 output |
| 76 | XROMCS | O | Flash ROM chip select signal output |
| 77 | HA1 | O | Flash ROM address bus A1 output |
| 78 | XRD | O | Flash ROM read signal output |
| 79, 80 | HD0, HD1 | I/O | Flash ROM data bus D0, D1 input/output |
| 81 | DVSS | — | Ground |
| 82 to 86 | HD2 to HD6 | I/O | Flash ROM data bus D2 to D6 input/output |
| 87 | HA21 | I/O | Flash ROM data bus D21 input/output |
| 88 | RESERVED | — | Not used (Open) |
| 89 | HD7 | I/O | Flash ROM data bus D7 input/output |
| 90 | DVSS | — | Ground |
| 91, 92 | HA17, HA0 | O | Flash ROM address bus A17, A0 output |
| 93 | DVDD18 | O | Flash ROM data bus D18 input/output |
| 94 | FWR | O | Loading motor control (FWR) signal output |
| 95 | REV | O | Loading motor control (REV) signal output |
| 96 | DVDD3 | — | Power supply (+3.3V) |
| 97 | IFSDO | O | CPU I/F serial data output |
| 98 | IFCK | O | CPU I/F serial clock output |
| 99 | xIFCS | O | CPU I/F chip select output |
| 100 | IFSDI | I | CPU I/F serial data input |
| 101 | SCL | O | EEPROM serial clock output |
| 102 | SDA | I/O | EEPROM serial data input/output |
| 103 | CKSW | I | Chuck/Tray detect switch signal input |
| 104 | OCSW | I | Chuck/Tray detect switch signal input |
| 105 | RXD | I | RXD signal input from Jig |
| 106 | TXD | O | TXD signal output to Jig |
| 107 | ICE | O | Not used (Open) |
| 108 | xSYSRST | I | System reset signal input |
| 109 | RESERVED | I | Not used (Open) |
| 110 | xIFBSY | I | Busy signal input from CPU I/F |
| 111 | DQM0 | O | SDRAM lower byte mask signal output |
| 112 | EEWP | I | EEPROM ready/Busy wake up signal input |
| 113 to 117 | RD7 to 3 | I/O | SDROM data bus D7 to D3 input/output |
| 118 | DVDD3 | — | Power supply (+3.3V) |
| 119 to 121 | RD2 to RD0 | I/O | SDROM data bus D2 to D0 input/output |
| 122 to 129 | RD15 to RD8 | I/O | SDROM data bus D15 to D8 input/output |
| 130 | TSD_M | I | TSD signal input |
| 131 | DVDD3 | — | Power supply (+3.3V) |
| 132 | DQM1 | O | SDRAM lower byte mask signal output |
| 133 | _RWE | O | SDRAM write enable signal output |
| 134 | _CAS | O | SDRAM column address strobe signal output |
| 135 | _RAS | O | SDRAM row address strobe signal output |
| 136 | _RCS | O | SDRAM chip select signal output |
| 137, 138 | BA0, BA1 | O | SDRAM bank address 0, 1 output |
| 139 | RA10 | O | SDRAM address bus A10 output |
| 140, 141 | RA0, RA1 | O | SDRAM address bus A0, A1 output |
| 142 | DVDD18 | — | Power supply (+1.8V) |
| 143, 144 | RA2, RA3 | O | SDRAM address bus A0, A3 output |

| Pin No. | Pin Name | I/O | Description |
|---|---|---|---|
| 145 | DVDD3 | — | Power supply (+3.3V) |
| 146 | DRCLK | O | SDRAM clock output |
| 147 | CKE | O | SDRAM clock enable signal output |
| 148 | DVSS | — | Ground |
| 149 | RA11 | O | SDRAM address bus A11 output |
| 150 to 155 | RA9 to RA4 | O | SDRAM address bus A9 to A4 output |
| 156 | DVDD3 | — | Power supply (+3.3V) |
| 157 | MUTE123 | O | Mute signal output for Focus/Tracking/Sledding |
| 158 | MUTE | O | Mute signal output for Spindle motor |
| 159 | DDC_DA | I/O | HDMI DDC line data input/output |
| 160 | DVDD18 | — | Power supply (+1.8V) |
| 161 | DDC_CLK | I/O | HDMI DDC line clock input/output |
| 162 | HIPLG | I | HDMI HPD signal input |
| 163 | AGND3 | — | Ground |
| 164 | EXT_RES | I | Ext. resistor connected terminal |
| 165, 166 | AVDD3 | — | Power supply (+3.3V) |
| 167 | EXT_CAP | I | Ext. capacitor connected terminal |
| 168, 169 | AGND3, AGND18 | — | Ground |
| 170 | TXCN | O | HDMI TXD-clock output |
| 171 | TXCP | O | HDMI TXD-clock output |
| 172 | AVDD18 | — | Power supply (+1.8V) |
| 173 | TX0N | O | HDMI TXD-0 output |
| 174 | TX0P | O | HDMI TXD-0 output |
| 175 | AGND18 | — | Power supply (+1.8V) |
| 176 | TX1N | O | HDMI TXD-1 output |
| 177 | TX1P | O | HDMI TXD-1 output |
| 178 | AVD18 | — | Power supply (+1.8V) |
| 179 | TX2N | O | HDMI TXD-2 output |
| 180 | TX2P | O | HDMI TXD-2 output |
| 181 | AGND18 | — | Power supply (+1.8V) |
| 182 | R/Cr/Pr | O | Video chroma R/Cr/Pr signal output |
| 183 | B/Cb/Pb | O | Video chroma B/Cb/Pb signal output |
| 184 | DACVSSA | — | Ground |
| 185 | Y/G | O | Video Y/chroma G signal output |
| 186 | DACVDDA | — | Power supply (+3.3V) |
| 187 | CVBS | O | Video Composite signal output (Not used in this set) |
| 188 | DACVSSB | — | Ground |
| 189 | C | O | Video chroma signal output |
| 190 | DACVDDB | — | Power supply (+3.3V) |
| 191 | Y | O | Video Y signal output |
| 192 | DACVSSC | — | Ground |
| 193 | FS | I | Full Scale Adjustment setting terminal |
| 194 | VREF | I | Reference Voltage input terminal |
| 195 | DACVDDC | — | Power supply (+3.3V) |
| 196 | VBUS_OE | O | VBUS power control signal output |
| 197 | VBUS_OC | I | VBUS detect signal input |
| 198 | SCORE/DIR_XSTATE | I | SCORE signal input |
| 199 | SPMCK | I | DIR MCK clock input (Not used in this set) |
| 200 | SPBCK | I | DIR BCK clock input (Not used in this set) |
| 201 | SPLRCK | I | DIR LRCK clock input (Not used in this set) |
| 202 | ADIN (SPDATA) | I | Audio digital data input (Not used in this set) |
| 203 | ACLK | O | A/D converter and DAMP clock output |
| 204 | ABCK | O | A/D converter and DAMP BCK clock output |
| 205 | ALRCK | O | A/D converter and DAMP LRCK clock output |
| 206 | MC_DATA (ADIN) | I | A/D converter data input (Not used in this set) |
| 207 | DVDD3 | — | Power supply (+3.3V) |

| Pin No. | Pin Name | I/O | Description |
|---|---|---|---|
| 208 | MIC | I | MIC detect status input |
| 209 | WIDE | O | WIDE select signal output |
| 210 | RGB_SEL/DSEL | O | Video output select signal output |
| 211 | TRG_SW | I | Not used (Pull up) |
| 212 | DVDD18 | — | Power supply (+3.3V) |
| 213 | KMOD | O | KARAOKE MODE information signal output |
| 214 | XVOICE/DIR_CSFLAG | I | XVOICE signal input |
| 215 | SPDIF | O | SPDIF signal output |
| 216 | APLLVDD3 | — | Power supply (+3.3V) |
| 217 | APLLCAP | — | Ext capacitor connected terminal |
| 218 | APLLVSS | — | Ground |
| 219 | ADACVSS2 | — | Ground |
| 220 | ADACVSS1 | — | Ground |
| 221 | DIR_CE | O | DIR I/F chip select signal output (Not used in this set) |
| 222 | ASDATA3 | O | Audio digital signal output to D-AMP (Not used in this set) |
| 223 | ASDATA2 | O | Audio digital signal output to D-AMP |
| 224 | AVCM | — | Ext capacitor connected terminal |
| 225 | ASDATA1 | O | Audio digital signal output to D-AMP |
| 226 | ASDATA0 | O | Audio digital signal output to D-AMP |
| 227 | DIR_CL | O | DIR I/F clock output (Not used in this set) |
| 228 | ADACVDD1 | — | Power supply (+3.3V) |
| 229 | ADACVDD2 | — | Power supply (+3.3V) |
| 230 | Rt/DIR_DI | O | Audio (R-CH) output |
| 231 | Lt/DIR_DO | O | Audio (L-CH) output |
| 232 | ADACSS3 | — | Ground |
| 233 | ADACVDD3 | — | Power supply (+3.3V) |
| 234 | SADCVDD18 | — | Power supply (+1.8V) |
| 235 | SADCVSS18 | — | Ground |
| 236 | FGND18 | — | Ground |
| 237 | RFVDD18 | — | Power supply (+1.8V) |
| 238 | XTALO | O | Crystal output for main clock (27MHz) |
| 239 | XTALI | I | Crystal input for main clock (27MHz) |
| 240 | JITFO | O | The output terminal of RF jitter meter |
| 241 | JITFN | I | The input terminal of RF jitter meter |
| 242 | PLLVSS | — | Ground |
| 243 | PLLVDD3 | — | Power supply (+3.3V) |
| 244 | LPFON | O | The negative output of loop filter amplifier |
| 245 | LPFIP | I | The positive input terminal of loop filter amplifier |
| 246 | LPFIN | I | The negative input terminal of loop filter amplifier |
| 247 | LPFOP | O | The positive output of loop filter amplifier |
| 248 | ADCVDD3 | — | Power supply (+3.3V) |
| 249 | ADCVSS | — | Ground |
| 250 | RFVDD3 | — | Power supply (+3.3V) |
| 251 | RFRPDC | O | RF ripple detect output |
| 252 | RFRPAC | I | RF ripple detect input (through AC-coupling) |
| 253 | HRFZC | I | High frequency RF ripple zero crossing |
| 254 | CRTPLP | O | Defect level filter capacitor connected terminal |
| 255 | RFGND18 | — | Power supply (+3.3V) |
| 256 | OSP | O | RF offset cancellation capacitor connecting |

**MAIN BOARD (5/9) IC501 R5F3640DDFAR (SYSTEM CONTROL)**

| Pin No. | Pin Name | I/O | Description |
|---|---|---|---|
| 1 | DAMP_SCDT/DIR_DIN | O | D-AMP processor and DIR data output |
| 2 | DAMP_SHIFT/DIR_CLK | O | D-AMP processor and DIR clock output |
| 3 | CEC_RX_IN | I | CEC data input |
| 4 | SIRCS_IN | I | Sircs input |
| 5 | DSP_MOSI/ASEL4 | O | Serial data output to DSP |
| 6 | DSP_MISO/ASEL5 | I | Serial data input from DSP |
| 7 | DSP_SPICLK | O | Serial data transfer clock signal output to DSP |
| 8 | BYTE | I | External data bus input. (Connected to ground) |
| 9 | CNVSS | I | Change processor mode input (L: Single chip mode) |
| 10, 11 | EN_A, EN_B | I | Volume control pulse input for ENCODER |
| 12 | RESET | I | System reset signal input |
| 13 | XOUT | O | Crystal output for main clock (5MHz) |
| 14 | VSS | — | Ground |
| 15 | XIN | I | Crystal input for main clock (5MHz) |
| 16 | VCC | — | Power supply (BUP+3.3V) |
| 17 | NMI | I | Not used (Fixed to “H” (BUP+3.3V)) |
| 18 | DIR_ZERO $\overline{\text{INT2}}$ | O | DIR_ZERO signal output |
| 19 | DIRCSFLAG $\overline{\text{INT3}}$ /A.CAL_OUT_LEVEL | I | DIR-CS flag signal input |
| 20 | AC_CUT $\overline{\text{INT0}}$ | I | AC-CUT detect signal input |
| 21 | FL_CLK/LED_CLK | O | FL and LED driver clock output |
| 22 | CEC_TX_OUT | O | CEC data output |
| 23 | FL_CS/STB | O | FL and LED driver chip select signal output |
| 24 | FL_D_OUT/LED_DATA | O | FL and LED driver data output |
| 25 | DIVER_RST_CS/ S-AIR_SRC_MUTE | O | Not used (Open) |
| 26 | MIC_GAIN | O | MIC gain control signal output |
| 27 | CDM_OPEN_SW/ XM_SEL | I | CDM open switch signal input |
| 28 | DC_CONT | O | A.CAL MIC DC control signal output |
| 29 | DMP_RX_IN | I | DMPORT data input |
| 30 | DMP_TX_OUT | O | DMPORT data output |
| 31 | DVD_SID | O | Serial data output to CDX9917R |
| 32 | DVD_SOD | I | Serial data input from CDX9917R |
| 33 | DVD_SCO | I | Serial clock input from CDX9917R |
| 34 | DVD_XIFBUSY | O | RTS signal output to CDX9917R |
| 35 | XM_TX_OUT/ MIC_DET_OUT | O | MIC detect status output |
| 36 | XM_RX_IN/KRMOD | I | KARAOKE MODE information signal input |
| 37 | DVD XIFCS | I | Chip select signal output from CXD9917R |
| 38 | MTK RST | O | System reset output |
| 39 | P_CONT1 | O | Power control signal output |
| 40 | P_CONT2 | O | Power control signal output |
| 41 | WRITE EMP P_CONT3 | O | Power control signal output |
| 42 | DRIVE_RST(EN) | O | D-AMP driver reset signal output |
| 43 | SD(DIAG)/PVDD_DET | I | D-AMP driver shut down signal input |
| 44 | OVERFLOW1 | I | D-AMP processor F/C/S over flow detect signal input |
| 45 | OVERFLOW2 | I | D-AMP processor SW over flow detect signal input |
| 46 | WRITE CE | I | Not used (Fixed to “H” (+3.3V)) |
| 47 | I2C_DATA | I/O | EEPROM I2C serial data input/output |
| 48 | I2C_CLK | I/O | EEPROM I2C serial clock input/output |
| 49 | DAMP LATCH3 | O | D-AMP processor latch-3 signal output |
| 50 | DAMP INIT | O | D-AMP processor reset signal output |
| 51 | DAMP SOFT MUTE | O | D-AMP processor soft mute signal output |

| Pin No. | Pin Name | I/O | Description |
|---|---|---|---|
| 52 | M_ST | O | LINK (Multi STEREO) control signal output |
| 53 | HP_MUTE | O | Headphone mute signal output |
| 54 | S-AIR_ADC_SEL | O | S-AIR ADC selector signal output |
| 55 | MIC_CLK | O | Serial clock output to MIC D/A converter (DZ870KW/DZ870M) |
| 56 | DAMP LATCH2 | O | D-AMP processor latch-2 signal output |
| 57 | DC_DET | I | Speaker DC balance protect signal input |
| 58 | S-AIR_RST | O | S-AIR reset signal output |
| 59 | DIR_HCE | O | Chip enable signal output to DIR |
| 60 | DIR_ERR | I | Error signal input from DIR |
| 61 | DIR_XSTATE | I | State signal input from DIR |
| 62 | VCC | — | Power supply (BUP+3.3V) |
| 63 | HDMI_PCONT | O | HDMI hot plug power control signal output |
| 64 | VSS | — | Ground |
| 65 | DAMP LATCH1 | O | D-AMP processor latch-1 signal output |
| 66 | JACK1/JACK2/ S-AIR_DET | I | MIC or Headphone insert detect signal input |
| 67 | GPIO2 | I | S-AIR interrupt signal input |
| 68 | TUNED | I | TUNER TUNED signal input |
| 69 | ST_CLK | O | TUNER clock output |
| 70 | ST_DO | I | TUNER data input |
| 71 | ST_CE | O | TUNER chip enable signal output |
| 72 | ST_DI | O | TUNER data output |
| 73 | DSP_INTR | I | Interruption request signal input from DSP |
| 74 | INT4 KEY INT | I | Wake up signal input from function key |
| 75 | INT3 RDS_CLK/ LED_LAT | I | RDS clock input |
| 76 | RDS-DATA/ XM_RST(PCONT) | I | RDS data input |
| 77 | S-AIR I2C_SDA | I/O | I2C serial data input/output for S-AIR |
| 78 | S-AIR I2C_SCL | I/O | I2C serial clock input/output for S-AIR |
| 79 | DSP_SF_CE | O | SF chip enable signal output DSP |
| 80 | 2ND_XM_SEL/ TV_SEL/MIC_DATA | O | TV control signal output (DZ860W)<br>Serial data output to MIC D/A converter (DZ870KW/DZ870M) |
| 81 | ASEL3/DSP_SPIDS/ XM_SRC_RST | O | Serial data latch pulse signal output to DSP |
| 82 | V_SEL0 | O | Video select signal output |
| 83 | V_SEL1 | O | Video select signal output |
| 84 | IO_CE/ASEL0 | O | Data latch signal output to DSR |
| 85 | IO_RESET/ASEL1 | O | Reset signal output to DSR |
| 86 | IO_DI/ASEL2 | O | Serial data output to DSR |
| 87 | IO_DO/VSEL2 | O | Not used |
| 88 | IO_CLK | O | Serial clock output to DSR |
| 89 | DMP_DET | I | DMPORT detect signal input |
| 90 | MONO/ST_DET | I | AUDIO IN jack MONO or STEREO detect signal input |
| 91 | A.CAL MIC LEVEL/ DSP_MASTER | I | DSP master signal input |
| 92 | DESTINATION | I | Destination select input |
| 93 | MODEL | I | Model select input |
| 94 | KEY2 | I | Key input 2 input |
| 95 | KEY1 | I | Key input 1 input |
| 96 | VSS | — | Ground |
| 97 | KEY0 | I | Key input 0 input |
| 98 | VREF | — | Reference voltage (E3.3V) |
| 99 | VCC | — | Power supply (BUP+3.3V) |
| 100 | DIR_HDOUT | I | DIR data input |

**DSP BOARD IC700 ADSST-AVR-1115 (DIGITAL AUDIO SIGNAL PROCESSOR)**

| Pin No. | Pin Name | I/O | Description |
|---|---|---|---|
| 1 | VDDINT | — | Power supply (+1.2 V) |
| 2 | CLKCFG0 | I | Clock frequency setting signal input 0 (Not used in this set) (Fixed at L) |
| 3 | CLKCFG1 | I | Clock frequency setting signal input 1 (Not used in this set) (Fixed at H) |
| 4 | BOOTCFG0 | I | Boot mode setting signal input 0 from DASP (Not used in this set) (Fixed at H) |
| 5 | BOOTCFG1 | I | Boot mode setting signal input 1 from DASP (Not used in this set) (Fixed at H) |
| 6 | GND | — | Ground |
| 7 | VDDEXT | — | Power supply (+3.3 V) |
| 8 | GND | — | Ground |
| 9 | VDDINT | — | Power supply (+1.2 V) |
| 10 | GND | — | Ground |
| 11 | VDDINT | — | Power supply (+1.2 V) |
| 12 | GND | — | Ground |
| 13 | VDDINT | — | Power supply (+1.2 V) |
| 14 | GND | — | Ground |
| 15 | FLAG0 INT_REQ | O | Interruption request signal output for SYSTEM CONTROL |
| 16 | FLAG1 DIR_ERR | I | PLL lock error signal input from DIR |
| 17 | AD7 | I/O | Not used (Open) |
| 18 | GND | — | Ground |
| 19 | VDDINT | — | Power supply (+1.2 V) |
| 20 | GND | — | Ground |
| 21 | VDDEXT | — | Power supply (+3.3 V) |
| 22 | GND | — | Ground |
| 23 | VDDINT | — | Power supply (+1.2 V) |
| 24 to 26 | AD6 to AD4 | I/O | Not used (Open) |
| 27 | VDDINT | — | Power supply (+1.2 V) |
| 28 | GND | — | Ground |
| 29, 30 | AD3, AD2 | I/O | Not used (Open) |
| 31 | VDDEXT | — | Power supply (+3.3 V) |
| 32 | GND | — | Ground |
| 33, 34 | AD1, AD0 | I/O | Not used (Open) |
| 35 | $\overline{WR}$ | O | Not used (Open) |
| 36, 37 | VDDINT | — | Power supply (+1.2 V) |
| 38 | GND | — | Ground |
| 39 | $\overline{RD}$ | O | Not used (Open) |
| 40 | ALE | O | Not used (Open) |
| 41 to 43 | AD15 to AD13 | I/O | Not used (Open) |
| 44 | GND | — | Ground |
| 45 | VDDEXT | — | Power supply (+3.3 V) |
| 46 | AD12 | I/O | Not used (Open) |
| 47 | VDDINT | — | Power supply (+1.2 V) |
| 48 | GND | — | Ground |
| 49 to 52 | AD11 to AD8 | I/O | Not used (Open) |
| 53 | A16 DAI_P1 | O | Not used (Open) |
| 54 | VDDINT | — | Power supply (+1.2 V) |
| 55 | GND | — | Ground |
| 56 | A17 DAI_P2 | O | Not used (Open) |
| 57 | A18 DAI_P3 | O | Not used (Open) |
| 58 | GND | — | Ground |
| 59 | VDDEXT | — | Power supply (+3.3 V) |
| 60 | VDDINT | — | Power supply (+1.2 V) |
| 61 | GND | — | Ground |
| 62 | PF_CE DAI_P4 | I/O | Not used (Open) |
| 63 | SPI_MAS DAI_P5 | O | SF-MASTER signal output |
| 64 | FL/FRDPSOA DAI_P6 | O | PCM audio signal output |
| 65 | FL/FRDPSOA DAI_P7 | O | PCM audio signal output |

| Pin No. | Pin Name | I/O | Description |
|---|---|---|---|
| 66 | VDDINT | — | Power supply (+1.2 V) |
| 67 | GND | — | Ground |
| 68 | VDDINT | — | Power supply (+1.2 V) |
| 69 | GND | — | Ground |
| 70 | DPSOC DAI_P8 | O | PCM audio signal output |
| 71 | DPSOD DAI_P9 | O | Not used (Open) |
| 72 | VDDINT | — | Power supply (+1.2 V) |
| 73 | VDDEXT | — | Power supply (+3.3 V) |
| 74 | GND | — | Ground |
| 75 | VDDINT | — | Power supply (+1.2 V) |
| 76 | GND | — | Ground |
| 77 | Lt/Rt DPSOE DAI_P10 | O | Audio L+R signal output |
| 78 | Compressed Stream DPSIA DAI_P11 | I | PCM audio signal input |
| 79 | LPCM FL/FR DPSIB DAI_P12 | I | PCM audio signal input |
| 80 | LPCM SL/SR DPSIC DAI_P13 | I | PCM audio signal input |
| 81 | LPCM C/SW DPSID DAI_P14 | I | PCM audio signal input |
| 82 | LPCM SBL/SBR DPSIE DAI_P15 | I | PCM audio signal input |
| 83 | VDDINT | — | Power supply (+1.2 V) |
| 84, 85 | GND | — | Ground |
| 86 | DPDVLRCK DAI_P16 | O | L/R sampling clock (44.1 kHz) signal output for PCM audio signal output |
| 87 | DPDVBCK DAI_P17 | O | Bit clock (2.8224 MHz) signal output for PCM audio signal output |
| 88 | DPLRCK DAI_P18 | I | L/R sampling clock (44.1 kHz) signal input from PCM audio signal input |
| 89 | DPBCK DAI_P19 | I | Bit clock (2.8224 MHz) signal input from PCM audio signal input |
| 90 | VDDINT | — | Power supply (+1.2 V) |
| 91, 92 | GND | — | Ground |
| 93 | VDDEXT | — | Power supply (+3.3 V) |
| 94 | DPFSCK DAI_P20 | I | Master clock signal input |
| 95 | GND | — | Ground |
| 96 | VDDINT | — | Power supply (+1.2 V) |
| 97 | $\overline{\text{NONAUDIO}}$ FLAG2 | I | Digital input signal select control signal input |
| 98 | $\overline{\text{SF\_CE}}$ FLAG3 | O | SF chip enable signal output |
| 99 | VDDINT | — | Power supply (+1.2 V) |
| 100 | GND | — | Ground |
| 101 | VDDINT | — | Power supply (+1.2 V) |
| 102 | GND | — | Ground |
| 103 | VDDINT | — | Power supply (+1.2 V) |
| 104 | GND | — | Ground |
| 105 | VDDINT | — | Power supply (+1.2 V) |
| 106 | GND | — | Ground |
| 107, 108 | VDDINT | — | Power supply (+1.2 V) |
| 109 | GND | — | Ground |
| 110 | VDDINT | — | Power supply (+1.2 V) |
| 111 | GND | — | Ground |
| 112 | VDDINT | — | Power supply (+1.2 V) |
| 113 | GND | — | Ground |
| 114 | VDDINT | — | Power supply (+1.2 V) |
| 115 | GND | — | Ground |
| 116 | VDDEXT | — | Power supply (+3.3 V) |
| 117 | GND | — | Ground |
| 118 | VDDINT | — | Power supply (+1.2 V) |
| 119 | GND | — | Ground |

| Pin No. | Pin Name | I/O | Description |
|---|---|---|---|
| 120 | VDDINT | — | Power supply (+1.2 V) |
| 121 | $\overline{\text{RESET}}$ | I | System reset signal input from SYSTEM CONTROL |
| 122 | $\overline{\text{SPIDS}}$ | I | Serial data latch pulse signal input from SYSTEM CONTROL |
| 123 | GND | — | Ground |
| 124 | VDDINT | — | Power supply (+1.2 V) |
| 125 | SPICLK | I | Serial data transfer clock signal input from SYSTEM CONTROL |
| 126 | MISO | O | Serial data output for SYSTEM CONTROL |
| 127 | MOSI | I | Serial data input from with SYSTEM CONTROL |
| 128 | GND | — | Ground |
| 129 | VDDINT | — | Power supply (+1.2 V) |
| 130 | VDDEXT | — | Power supply (+3.3 V) |
| 131 | AVDD | — | Power supply (+1.2 V) |
| 132 | AVSS | — | Ground |
| 133 | GND | — | Ground |
| 134 | CLKOUT | — | Not used (Open) |
| 135 | $\overline{\text{EMU}}$ | — | Not used (Open) |
| 136 | TDO | — | Not used (Open) |
| 137 | TDI | — | Not used (Fixed at L) |
| 138 | $\overline{\text{TRST}}$ | — | Not used (Fixed at L) |
| 139 | TCK | — | Not used (Fixed at L) |
| 140 | TMS | — | Not used (Fixed at L) |
| 141 | GND | — | Ground |
| 142 | CLKIN | I | System clock input (25 MHz) |
| 143 | XTAL | O | System clock output (25 MHz) |
| 144 | VDDEXT | — | Power supply (+3.3 V) |

# SECTION 7
# EXPLODED VIEWS

**Note:**

- -XX and -X mean standardized parts, so they may have some difference from the original one.
- Items marked "*" are not stocked since they are seldom required for routine service.
  Some delay should be anticipated when ordering these items.
- The mechanical parts with no reference number in the exploded views are not supplied.
- Abbreviation
  AUS : Australian model
  E3 : 240V AC area in E model
  E15 : Iran model
  E32 : 110-240V AC area in E model
  EA : Saudi Arabia model
  KR : Korean model
  MX : Mexican model
  RU : Russian model
  SP : Singapore model
  TH : Thai model
  TW : Taiwan model

The components identified by mark ⚠ or dotted line with mark ⚠ are critical for safety.
Replace only with part number specified.

The components identified by mark 🔒 contain confidential information.
Strictly follow the instructions whenever the components are repaired and/or replaced.

## 7-1. OVERALL SECTION

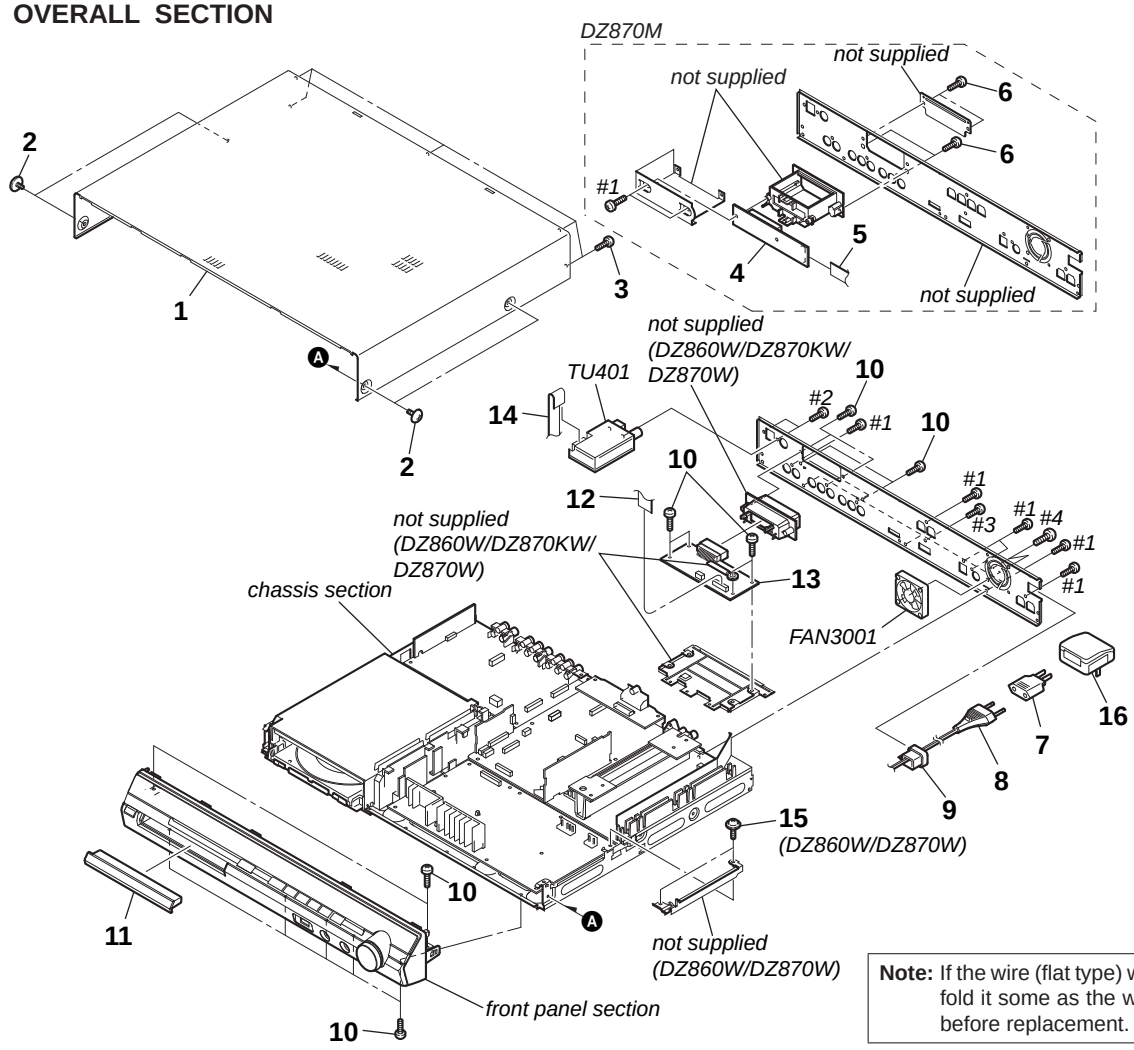


**Note:** If the wire (flat type) was replaced, fold it some as the wire (flat type) before replacement.

| Ref. No. | Part No. | Description | Remark |
|---|---|---|---|
| 1 | 3-273-758-01 | CASE (DSR) | |
| 2 | 3-363-099-22 | SCREW (CASE 3 TP2) | |
| 3 | 3-704-515-32 | SCREW (BV/RING) | |
| 4 | A-1438-875-A | S-AIR-CON BOARD, COMPLETE (DZ870M) | |
| 5 | 1-828-350-11 | WIRE (FLAT TYPE) (17 CORE) (DZ870M) | |
| 6 | 3-077-331-11 | +BV 3 (3-CR) (DZ870M) | |
| ⚠ 7 | 1-569-008-22 | ADAPTOR, CONVERSION 2P (DZ870W:E15,E32) | |
| ⚠ 8 | 1-769-079-61 | CORD, POWER (DZ870W:KR) | |
| ⚠ 8 | 1-827-597-42 | CORD, POWER (DZ870W:TW) | |
| ⚠ 8 | 1-834-288-11 | CORD, POWER (DZ870KW:TH) | |
| ⚠ 8 | 1-834-966-21 | CORD, POWER (DZ860W:AEP,CE2/DZ870KW:SP/DZ870M/DZ870W:E3,E15,E32,EA) | |
| ⚠ 8 | 1-834-967-21 | CORD, POWER (DZ870W:AUS) | |
| ⚠ 8 | 1-834-978-11 | CORD, POWER (DZ870W:MX) | |
| ⚠ 8 | 1-835-078-21 | CORD, POWER (DZ860W:UK) | |
| 9 | 3-703-244-00 | BUSHING (2104), CORD (EXCEPT DZ870KW:TH) | |
| 9 | 4-916-783-01 | BUSHING, CORD (DZ870KW:TH) | |
| 10 | 3-077-331-21 | +BV 3 (3-CR) | |

| Ref. No. | Part No. | Description | Remark |
|---|---|---|---|
| 11 | 3-273-727-01 | PANEL, LOADING (DSR) | |
| 12 | 1-828-002-11 | WIRE (FLAT TYPE) (17 CORE) (DZ860W/DZ870KW/DZ870W) | |
| 13 | A-1542-042-A | S-AIR-INC BOARD, COMPLETE (DZ860W/DZ870KW/DZ870W) | |
| 14 | 1-827-720-11 | WIRE (FLAT TYPE) (11 CORE) (DZ860W/DZ870M) | |
| 14 | 1-828-955-11 | WIRE (FLAT TYPE) (9 CORE) (DZ870KW/DZ870W) | |
| 15 | 2-677-839-01 | +PWH 3X8 (SUMITITE) (DZ860W/DZ870W) | |
| ⚠ 16 | 1-770-019-61 | ADAPTOR, CONVERSION PLUG (EA) | |
| FAN3001 | 1-787-331-11 | FAN, D.C. | |
| TU401 | 1-693-759-11 | TUNER (FM/AM) (ANTENNA) (DZ860W/DZ870M) | |
| TU401 | 1-693-760-11 | TUNER (FM/AM) (ANTENNA) (DZ870W:KR) | |
| TU401 | 1-693-761-11 | TUNER (FM/AM) (ANTENNA) (DZ870KW/DZ870W:EXCEPT KR) | |
| #1 | 7-685-646-79 | SCREW +BVTP 3X8 TYPE2 IT-3 | |
| #2 | 7-685-871-01 | SCREW +BVTT 3X6 (S) | |
| #3 | 7-682-547-04 | SCREW +B 3X6 | |
| #4 | 7-685-881-09 | SCREW +BVTT 4X8 (S) | |

## 7-2. FRONT PANEL SECTION

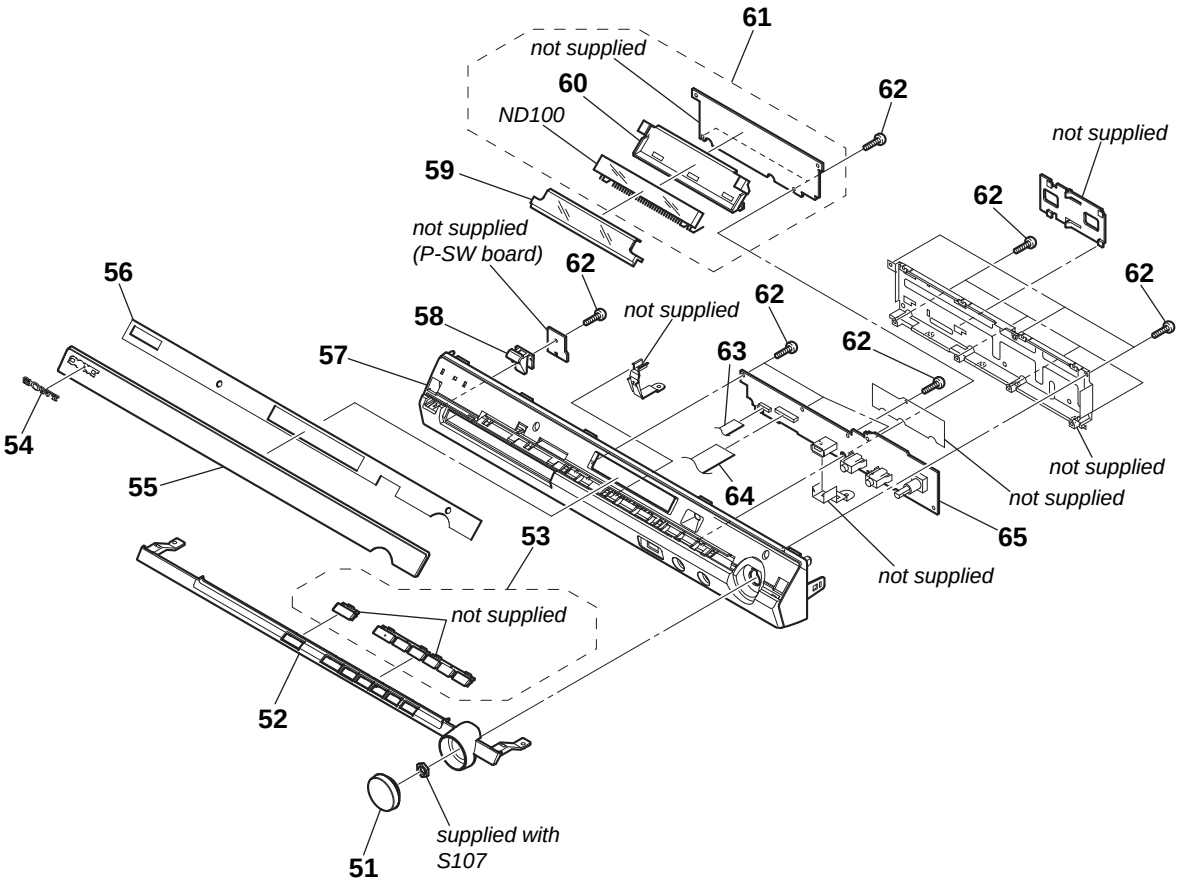


| Ref. No. | Part No. | Description | Remark |
|---|---|---|---|
| 51 | 2-889-990-01 | KNOB (VOL) | |
| 52 | 3-273-726-11 | ORNAMENT (DSR) | |
| 53 | 3-273-728-01 | BUTTON (PLAY-SP) (DZ860W/DZ870M/DZ870W:KR) | |
| 53 | 3-273-729-02 | BUTTON (PLAY) (DZ870KW/DZ870W:EXCEPT KR) | |
| 54 | 3-943-995-01 | EMBLEM (NO. 5), SONY | |
| 55 | 3-273-725-21 | WINDOW, INDICATION (DSR-2) (DZ860W) | |
| 55 | 3-273-725-31 | WINDOW, INDICATION (DSR-2) (DZ870W) | |
| 55 | 3-273-725-41 | WINDOW, INDICATION (DSR-2) (DZ870KW) | |
| 55 | 3-273-725-51 | WINDOW, INDICATION (DSR-2) (DZ870M) | |
| 56 | 3-280-669-01 | SHEET (DSR WINDOW), ADHESIVE | |
| 57 | 3-273-722-61 | PANEL (DSR-1), FRONT (DZ870KW) | |
| 57 | 3-273-722-71 | PANEL (DSR-1), FRONT (DZ860W) | |
| 57 | 3-273-722-81 | PANEL (DSR-1), FRONT (DZ870W) | |

| Ref. No. | Part No. | Description | Remark |
|---|---|---|---|
| 57 | 3-273-723-01 | PANEL (DSR-2), FRONT (DZ870M) | |
| 58 | 3-273-730-01 | BUTTON (POWER-DSR) | |
| 59 | 3-273-732-01 | FILTER, COLOR | |
| 60 | 3-273-731-01 | HOLDER (FL) | |
| 61 | A-1382-431-A | FL BOARD, COMPLETE | |
| 62 | 3-087-053-01 | +BVTP 2.6 (3CR) | |
| 63 | 1-828-307-11 | WIRE (FLAT TYPE) (9 CORE) | |
| 64 | 1-828-363-11 | WIRE (FLAT TYPE) (19 CORE) | |
| 65 | A-1458-490-A | JACK BOARD, COMPLETE (DZ860W/DZ870W:EXCEPT E32,MX) | |
| 65 | A-1459-202-A | JACK BOARD, COMPLETE (DZ870W:E32,MX) | |
| 65 | A-1459-218-A | JACK BOARD, COMPLETE (DZ870KW) | |
| 65 | A-1551-093-A | JACK BOARD, COMPLETE (DZ870M) | |
| ND100 | 1-519-988-11 | INDICATOR TUBE, FLUORESCENT | |

**Note:** If the wire (flat type) was replaced, fold it some as the wire (flat type) before replacement.

## 7-3. CHASSIS SECTION

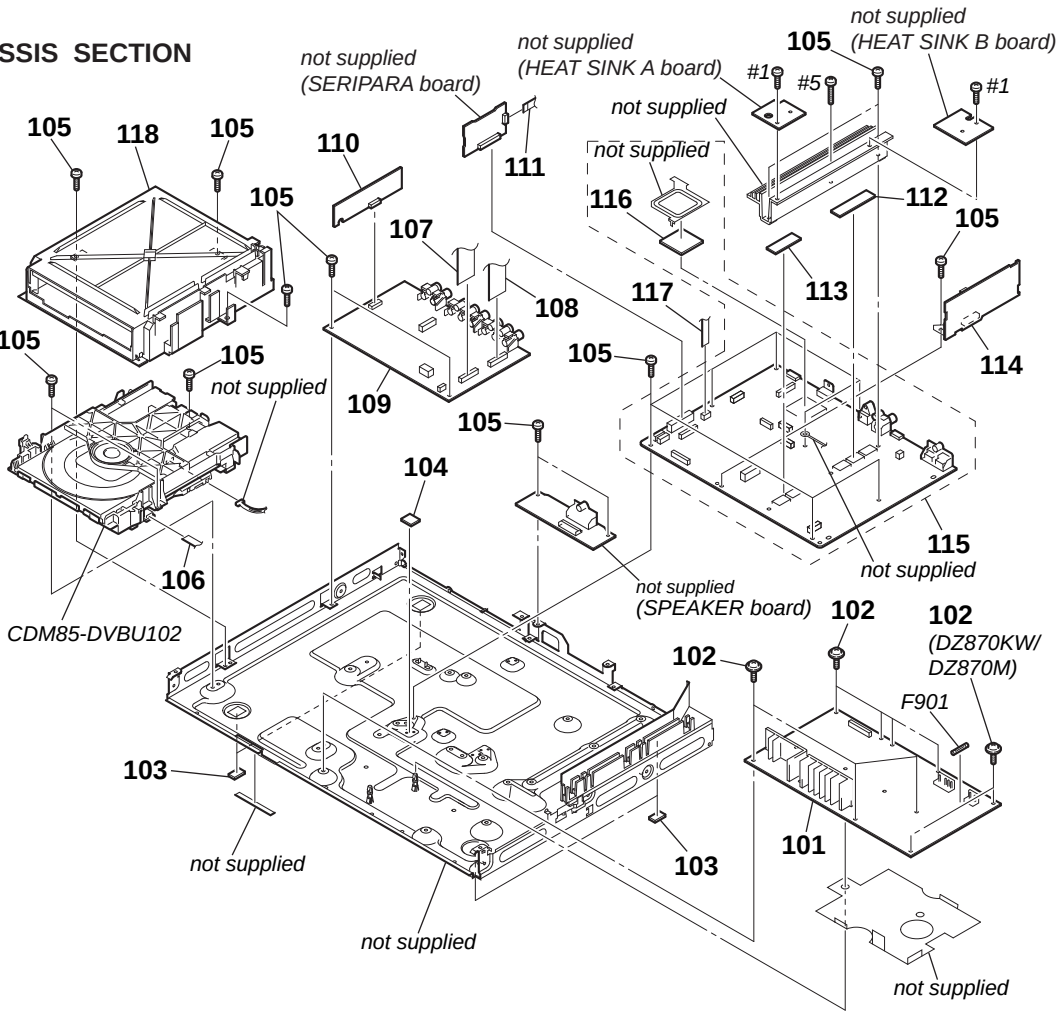


| Ref. No. | Part No. | Description | Remark |
|---|---|---|---|
| 101 | A-1382-402-A | POWER BOARD, COMPLETE (DZ860W) | |
| 101 | A-1392-694-A | POWER BOARD, COMPLETE (DZ870KW:SP/ DZ870M/DZ870W:E3,E15,AUS,EA,KR) | |
| 101 | A-1392-696-A | POWER BOARD, COMPLETE (DZ870W:TW) | |
| 101 | A-1452-054-A | POWER BOARD, COMPLETE (DZ870W:MX) | |
| 101 | A-1452-056-A | POWER BOARD, COMPLETE (DZ870W:E32) | |
| 101 | A-1519-582-A | POWER BOARD, COMPLETE (DZ870KW:TH) | |
| 102 | 2-677-839-01 | +PWH 3X8 (SUMITITE) | |
| 103 | 4-232-478-31 | FOOT | |
| 104 | 4-231-099-91 | SHEET, RADIATION | |
| 105 | 3-077-331-21 | +BV 3 (3-CR) | |
| 106 | 1-828-293-11 | WIRE (FLAT TYPE) (5 CORE) | |
| 107 | 1-828-309-11 | WIRE (FLAT TYPE) (9 CORE) (DZ870W) | |
| 107 | 1-828-319-11 | WIRE (FLAT TYPE) (11 CORE) | (DZ860W/DZ870KW) |
| 107 | 1-828-329-11 | WIRE (FLAT TYPE) (13 CORE) (DZ870M) | |
| 108 | 1-828-347-11 | WIRE (FLAT TYPE) (17 CORE) | (DZ870KW/DZ870M/DZ870W) |
| 108 | 1-828-357-11 | WIRE (FLAT TYPE) (19 CORE) (DZ860W) | |
| 109 | A-1458-469-A | IO-COMPONENT BOARD, COMPLETE (DZ870M) | |
| 109 | A-1459-177-A | IO-COMPONENT BOARD, COMPLETE | (DZ870W:EXCEPT KR) |
| 109 | A-1459-220-A | IO-COMPONENT BOARD, COMPLETE | (DZ870KW) |
| 109 | A-1539-177-A | IO-COMPONENT BOARD, COMPLETE | (DZ870W:KR) |
| 109 | A-1458-493-A | IO-SCART BOARD, COMPLETE (DZ860W) | |
| 110 | A-1441-335-A | SCORE BOARD, COMPLETE (DZ870KW/DZ870M) | |
| 111 | 1-828-299-11 | WIRE (FLAT TYPE) (7 CORE) | |
| 112 | 3-100-158-01 | SHEET, RADIATION | |
| 113 | 3-100-158-11 | SHEET, RADIATION (DZ870M) | |
| 113 | 3-100-158-21 | SHEET, RADIATION (DZ860W/DZ870KW/DZ870W) | |

| Ref. No. | Part No. | Description | Remark |
|---|---|---|---|
| 114 | A-1540-536-A | DSP BOARD, COMPLETE | |
| 115 | A-1458-471-A | MAIN BOARD, COMPLETE (for SERVICE) | (DZ870M) |
| 115 | A-1458-495-A | MAIN BOARD, COMPLETE (for SERVICE) | (DZ860W) |
| 115 | A-1459-179-A | MAIN BOARD, COMPLETE (for SERVICE) | (DZ870W:E3,E15,EA) |
| 115 | A-1459-194-A | MAIN BOARD, COMPLETE (for SERVICE) | (DZ870W:TW) |
| 115 | A-1459-205-A | MAIN BOARD, COMPLETE (for SERVICE) | (DZ870W:E32) |
| 115 | A-1459-222-A | MAIN BOARD, COMPLETE (for SERVICE) | (DZ870KW) |
| 115 | A-1539-245-A | MAIN BOARD, COMPLETE (for SERVICE) | (DZ870W:AUS) |
| 115 | A-1539-246-A | MAIN BOARD, COMPLETE (for SERVICE) | (DZ870W:KR) |
| 115 | A-1539-247-A | MAIN BOARD, COMPLETE (for SERVICE) | (DZ870W:MX) |
| 116 | 4-231-099-41 | SHEET, RADIATION | |
| 117 | 1-828-287-11 | WIRE (FLAT TYPE) (5 CORE) (DZ860W/DZ870W) | |
| 117 | 1-828-296-11 | WIRE (FLAT TYPE) (7 CORE) (DZ870KW/DZ870M) | |
| 118 | 3-273-733-01 | COVER (CDM-DSR) | (DZ860W/DZ870M/DZ870W:EXCEPT EA) |
| 118 | 3-273-733-11 | COVER (CDM-DSR) (DZ870KW/DZ870W:EA) | |
| F901 | 1-533-311-12 | FUSE, GLASS CYLINDRICAL (DIA. 5) (8A/125V) | (DZ870W:MX,TW) |
| F901 | 1-576-233-51 | FUSE (H.B.C.) (T6.3AL/250V) | (EXCEPT DZ870W:E32,MX,TW) |
| F901 | 1-576-300-51 | FUSE (H.B.C.) (T8AL/250V) (DZ870W:E32) | |
| #1 | 7-685-646-79 | SCREW +BVTP 3X8 TYPE2 IT-3 | |
| #5 | 7-685-648-79 | SCREW +BVTP 3X12 TYPE2 IT-3 | |

**Note:** If the wire (flat type) was replaced, fold it some as the wire (flat type) before replacement.

## 7-4. DVD MECHANISM DECK SECTION (CDM85-DVBU102)

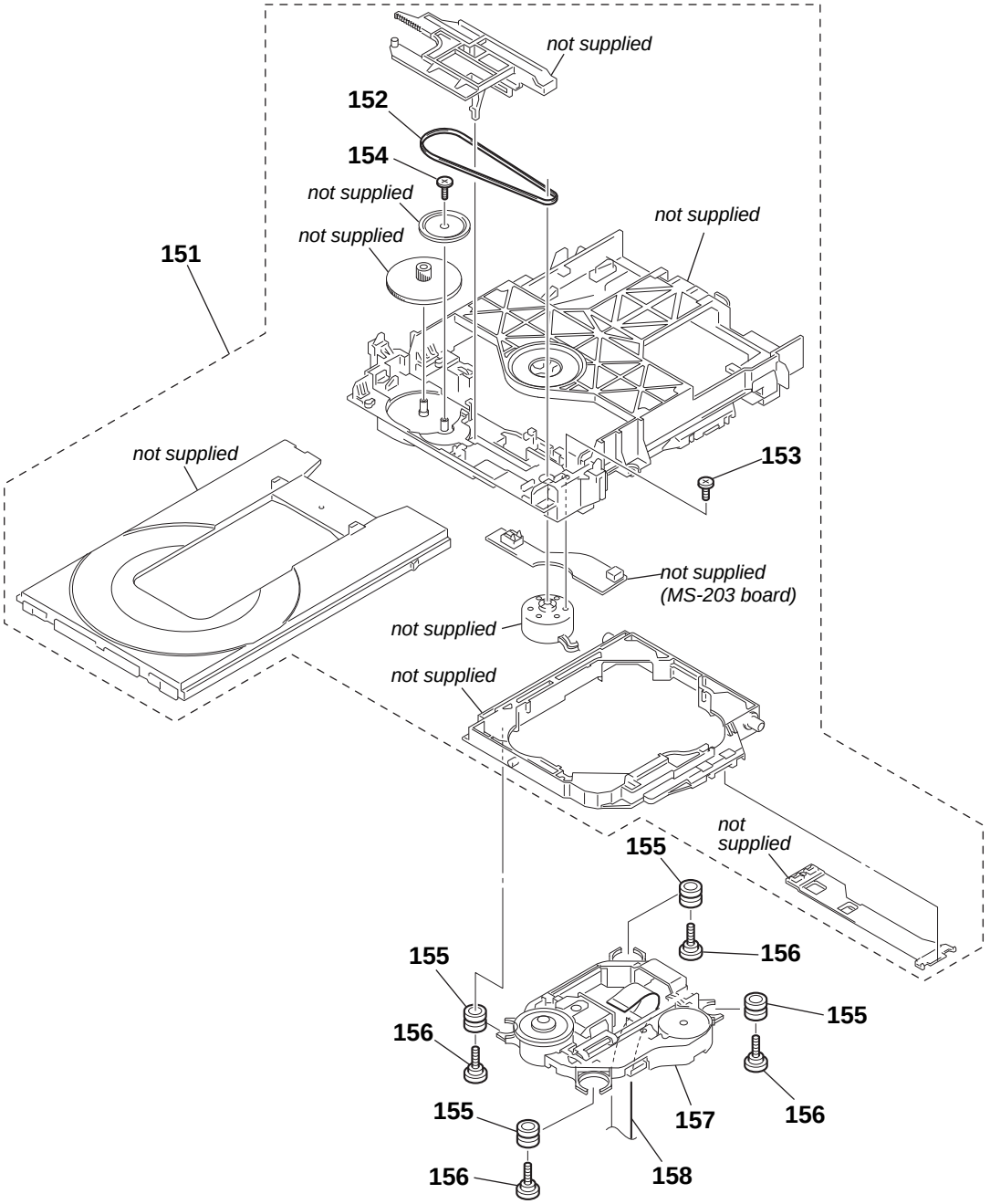


| Ref. No. | Part No. | Description | Remark |
|---|---|---|---|
| 151 | A-6071-669-A | LOADING ASSY (M) | |
| 152 | 3-088-371-01 | BELT | |
| 153 | 4-974-725-11 | SCREW (M1.7X2.5), P | |
| 154 | 4-674-137-11 | SCREW (PTP 2X5) | |
| 155 | 2-634-618-01 | INSULATOR | |
| 156 | 3-087-599-01 | SCREW, INSULATOR | |
| ⚠ 157 | 8-820-321-05 | OPTICAL PICK-UP KHM-313CAA/C2RP | |
| 158 | 1-828-773-51 | WIRE (FLAT TYPE) (24 CORE) | |

**Note:** If the wire (flat type) was replaced, fold it some as the wire (flat type) before replacement.

# SECTION 8
# ELECTRICAL PARTS LIST

**Note:**

- Due to standardization, replacements in the parts list may be different from the parts specified in the diagrams or the components used on the set.
- -XX and -X mean standardized parts, so they may have some difference from the original one.
- Items marked "*" are not stocked since they are seldom required for routine service.
  Some delay should be anticipated when ordering these items.
- RESISTORS
  All resistors are in ohms.
  METAL: Metal-film resistor.
  METAL OXIDE: Metal oxide-film resistor.
  F: nonflammable
- CAPACITORS
  uF: µF
- COILS
  uH: µH
- SEMICONDUCTORS
  In each case, u: µ, for example:
  uA. . : µA. . , uPA. . , µPA. . ,
  uPB. . : µPB. . , uPC. . , µPC. . ,
  uPD. . : µPD. .
- Abbreviation
  AUS : Australian model
  E3 : 240V AC area in E model
  E15 : Iran model
  E32 : 110-240V AC area in E model
  EA : Saudi Arabia model
  KR : Korean model
  MX : Mexican model
  RU : Russian model
  SP : Singapore model
  TH : Thai model
  TW : Taiwan model

When indicating parts by reference number, please include the board name.

The components identified by mark ⚠ or dotted line with mark ⚠ are critical for safety.
Replace only with part number specified.

The components identified by mark 🔒 contain confidential information.
Strictly follow the instructions whenever the components are repaired and/or replaced.

| Ref. No. | Part No. | Description | | | Remark |
|---|---|---|---|---|---|
| | A-1540-536-A | DSP BOARD, COMPLETE | | | |
| | | ********** | | | |
| | | < CAPACITOR > | | | |
| C700 | 1-162-912-11 | CERAMIC CHIP | 7PF | 0.5PF | 50V |
| C701 | 1-162-912-11 | CERAMIC CHIP | 7PF | 0.5PF | 50V |
| C703 | 1-117-370-11 | CERAMIC CHIP | 10uF | | 10V |
| C706 | 1-107-826-11 | CERAMIC CHIP | 0.1uF | 10% | 16V |
| C707 | 1-162-970-11 | CERAMIC CHIP | 0.01uF | 10% | 25V |
| C708 | 1-107-826-11 | CERAMIC CHIP | 0.1uF | 10% | 16V |
| C709 | 1-107-826-11 | CERAMIC CHIP | 0.1uF | 10% | 16V |
| C710 | 1-107-826-11 | CERAMIC CHIP | 0.1uF | 10% | 16V |
| C711 | 1-107-826-11 | CERAMIC CHIP | 0.1uF | 10% | 16V |
| C712 | 1-162-970-11 | CERAMIC CHIP | 0.01uF | 10% | 25V |
| C713 | 1-107-826-11 | CERAMIC CHIP | 0.1uF | 10% | 16V |
| C714 | 1-107-826-11 | CERAMIC CHIP | 0.1uF | 10% | 16V |
| C715 | 1-107-826-11 | CERAMIC CHIP | 0.1uF | 10% | 16V |
| C716 | 1-107-826-11 | CERAMIC CHIP | 0.1uF | 10% | 16V |
| C717 | 1-117-370-11 | CERAMIC CHIP | 10uF | | 10V |
| C721 | 1-107-826-11 | CERAMIC CHIP | 0.1uF | 10% | 16V |
| C722 | 1-107-826-11 | CERAMIC CHIP | 0.1uF | 10% | 16V |
| C723 | 1-107-826-11 | CERAMIC CHIP | 0.1uF | 10% | 16V |
| C724 | 1-107-826-11 | CERAMIC CHIP | 0.1uF | 10% | 16V |
| C725 | 1-107-826-11 | CERAMIC CHIP | 0.1uF | 10% | 16V |
| C726 | 1-107-826-11 | CERAMIC CHIP | 0.1uF | 10% | 16V |
| C727 | 1-107-826-11 | CERAMIC CHIP | 0.1uF | 10% | 16V |
| C728 | 1-107-826-11 | CERAMIC CHIP | 0.1uF | 10% | 16V |
| C729 | 1-107-826-11 | CERAMIC CHIP | 0.1uF | 10% | 16V |
| C730 | 1-107-826-11 | CERAMIC CHIP | 0.1uF | 10% | 16V |
| C731 | 1-107-826-11 | CERAMIC CHIP | 0.1uF | 10% | 16V |
| C732 | 1-107-826-11 | CERAMIC CHIP | 0.1uF | 10% | 16V |
| C733 | 1-107-826-11 | CERAMIC CHIP | 0.1uF | 10% | 16V |
| C734 | 1-107-826-11 | CERAMIC CHIP | 0.1uF | 10% | 16V |
| C735 | 1-107-826-11 | CERAMIC CHIP | 0.1uF | 10% | 16V |
| C736 | 1-107-826-11 | CERAMIC CHIP | 0.1uF | 10% | 16V |
| C738 | 1-107-826-11 | CERAMIC CHIP | 0.1uF | 10% | 16V |
| C739 | 1-107-826-11 | CERAMIC CHIP | 0.1uF | 10% | 16V |
| C742 | 1-117-370-11 | CERAMIC CHIP | 10uF | | 10V |
| C743 | 1-107-826-11 | CERAMIC CHIP | 0.1uF | 10% | 16V |
| C744 | 1-107-826-11 | CERAMIC CHIP | 0.1uF | 10% | 16V |
| C745 | 1-107-826-11 | CERAMIC CHIP | 0.1uF | 10% | 16V |
| C746 | 1-107-826-11 | CERAMIC CHIP | 0.1uF | 10% | 16V |
| C747 | 1-107-826-11 | CERAMIC CHIP | 0.1uF | 10% | 16V |
| C748 | 1-107-826-11 | CERAMIC CHIP | 0.1uF | 10% | 16V |
| C749 | 1-107-826-11 | CERAMIC CHIP | 0.1uF | 10% | 16V |
| C750 | 1-107-826-11 | CERAMIC CHIP | 0.1uF | 10% | 16V |
| C752 | 1-117-370-11 | CERAMIC CHIP | 10uF | | 10V |
| C755 | 1-126-923-11 | ELECT | 220uF | 20% | 10V |
| C757 | 1-126-916-11 | ELECT | 1000uF | 20% | 6.3V |
| C758 | 1-107-826-11 | CERAMIC CHIP | 0.1uF | 10% | 16V |
| C759 | 1-107-826-11 | CERAMIC CHIP | 0.1uF | 10% | 16V |
| C761 | 1-107-826-11 | CERAMIC CHIP | 0.1uF | 10% | 16V |
| C762 | 1-107-826-11 | CERAMIC CHIP | 0.1uF | 10% | 16V |
| C763 | 1-107-826-11 | CERAMIC CHIP | 0.1uF | 10% | 16V |
| C765 | 1-107-826-11 | CERAMIC CHIP | 0.1uF | 10% | 16V |
| C766 | 1-107-826-11 | CERAMIC CHIP | 0.1uF | 10% | 16V |
| C767 | 1-104-658-11 | ELECT | 100uF | 20% | 10V |
| C768 | 1-107-826-11 | CERAMIC CHIP | 0.1uF | 10% | 16V |
| C769 | 1-127-715-11 | CERAMIC CHIP | 0.22uF | 10% | 16V |
| C770 | 1-162-970-11 | CERAMIC CHIP | 0.01uF | 10% | 25V |
| C771 | 1-107-826-11 | CERAMIC CHIP | 0.1uF | 10% | 16V |
| C772 | 1-126-942-61 | ELECT | 1000uF | 20% | 25V |
| C773 | 1-107-826-11 | CERAMIC CHIP | 0.1uF | 10% | 16V |
| | | < CONNECTOR > | | | |
| CN700 | 1-564-705-11 | PIN, CONNECTOR (SMALL TYPE) 3P | | | |
| CN701 | 1-821-707-11 | CONNECTOR, BOARD TO BOARD 30P | | | |
| | | < IC > | | | |
| IC700 | 6-709-759-01 | IC ADSST-AVR-1115 | | | |
| IC701 | 8-759-680-48 | IC TC7WH157FK(TE85R) | | | |
| IC702 | 8-759-831-52 | IC TC7WH125FK(TE85R) | | | |
| IC703 | 6-710-388-01 | IC 74LVC1G79GW-125 | | | |
| IC705 | 6-704-099-01 | IC TC7WZ08FK(TE85R) | | | |
| IC706 | A-1545-328-A | IC S25FL040A0LMFI003R (for SERVICE) | | | |
| IC707 | 6-712-613-01 | IC SI-3010KM-TLS | | | |
| | | < COIL > | | | |
| L700 | 1-414-398-11 | INDUCTOR | 10uH | | |
| | | < TRANSISTOR > | | | |
| Q700 | 8-729-038-11 | TRANSISTOR RT1P140C-TP-1 | | | |
| | | < RESISTOR > | | | |
| R700 | 1-216-815-11 | METAL CHIP | 330 | 5% | 1/10W |
| R701 | 1-216-864-11 | SHORT CHIP | 0 | | |
| R702 | 1-216-864-11 | SHORT CHIP | 0 | | |
| R703 | 1-216-864-11 | SHORT CHIP | 0 | | |
| R704 | 1-216-833-11 | METAL CHIP | 10K | 5% | 1/10W |

**DSP** **FL**

| Ref. No. | Part No. | Description | | | Remark |
|---|---|---|---|---|---|
| R705 | 1-216-821-11 | METAL CHIP | 1K | 5% | 1/10W |
| R706 | 1-216-864-11 | SHORT CHIP | 0 | | |
| R707 | 1-216-833-11 | METAL CHIP | 10K | 5% | 1/10W |
| R708 | 1-216-801-11 | METAL CHIP | 22 | 5% | 1/10W |
| R709 | 1-216-801-11 | METAL CHIP | 22 | 5% | 1/10W |
| R710 | 1-216-801-11 | METAL CHIP | 22 | 5% | 1/10W |
| R712 | 1-216-857-11 | METAL CHIP | 1M | 5% | 1/10W |
| R713 | 1-216-864-11 | SHORT CHIP | 0 | | |
| R714 | 1-216-864-11 | SHORT CHIP | 0 | | |
| R715 | 1-216-797-11 | METAL CHIP | 10 | 5% | 1/10W |
| R716 | 1-216-801-11 | METAL CHIP | 22 | 5% | 1/10W |
| R717 | 1-216-801-11 | METAL CHIP | 22 | 5% | 1/10W |
| R718 | 1-216-864-11 | SHORT CHIP | 0 | | |
| R721 | 1-216-833-11 | METAL CHIP | 10K | 5% | 1/10W |
| R723 | 1-216-833-11 | METAL CHIP | 10K | 5% | 1/10W |
| R725 | 1-216-833-11 | METAL CHIP | 10K | 5% | 1/10W |
| R726 | 1-216-821-11 | METAL CHIP | 1K | 5% | 1/10W |
| R727 | 1-216-805-11 | METAL CHIP | 47 | 5% | 1/10W |
| R728 | 1-216-864-11 | SHORT CHIP | 0 | | |
| R729 | 1-216-821-11 | METAL CHIP | 1K | 5% | 1/10W |
| R730 | 1-216-864-11 | SHORT CHIP | 0 | | |
| R731 | 1-216-864-11 | SHORT CHIP | 0 | | |
| R732 | 1-216-801-11 | METAL CHIP | 22 | 5% | 1/10W |
| R734 | 1-216-801-11 | METAL CHIP | 22 | 5% | 1/10W |
| R735 | 1-216-864-11 | SHORT CHIP | 0 | | |
| R736 | 1-216-864-11 | SHORT CHIP | 0 | | |
| R737 | 1-216-864-11 | SHORT CHIP | 0 | | |
| R738 | 1-216-864-11 | SHORT CHIP | 0 | | |
| R739 | 1-216-864-11 | SHORT CHIP | 0 | | |
| R740 | 1-216-801-11 | METAL CHIP | 22 | 5% | 1/10W |
| R742 | 1-216-801-11 | METAL CHIP | 22 | 5% | 1/10W |
| R743 | 1-216-801-11 | METAL CHIP | 22 | 5% | 1/10W |
| R744 | 1-216-801-11 | METAL CHIP | 22 | 5% | 1/10W |
| R745 | 1-216-801-11 | METAL CHIP | 22 | 5% | 1/10W |
| R746 | 1-216-801-11 | METAL CHIP | 22 | 5% | 1/10W |
| R749 | 1-216-801-11 | METAL CHIP | 22 | 5% | 1/10W |
| R750 | 1-216-809-11 | METAL CHIP | 100 | 5% | 1/10W |
| R752 | 1-216-801-11 | METAL CHIP | 22 | 5% | 1/10W |
| R753 | 1-216-801-11 | METAL CHIP | 22 | 5% | 1/10W |
| R754 | 1-216-864-11 | SHORT CHIP | 0 | | |
| R755 | 1-216-809-11 | METAL CHIP | 100 | 5% | 1/10W |
| R756 | 1-216-801-11 | METAL CHIP | 22 | 5% | 1/10W |
| R757 | 1-216-801-11 | METAL CHIP | 22 | 5% | 1/10W |
| R759 | 1-216-809-11 | METAL CHIP | 100 | 5% | 1/10W |
| R761 | 1-216-801-11 | METAL CHIP | 22 | 5% | 1/10W |
| R763 | 1-216-833-11 | METAL CHIP | 10K | 5% | 1/10W |
| R765 | 1-216-833-11 | METAL CHIP | 10K | 5% | 1/10W |
| R766 | 1-216-801-11 | METAL CHIP | 22 | 5% | 1/10W |
| R767 | 1-216-849-11 | METAL CHIP | 220K | 5% | 1/10W |
| R768 | 1-218-871-11 | METAL CHIP | 10K | 0.5% | 1/10W |
| R769 | 1-218-854-11 | METAL CHIP | 2K | 0.5% | 1/10W |
| R770 | 1-216-833-11 | METAL CHIP | 10K | 5% | 1/10W |
| R771 | 1-216-833-11 | METAL CHIP | 10K | 5% | 1/10W |
| R772 | 1-216-801-11 | METAL CHIP | 22 | 5% | 1/10W |
| R773 | 1-216-821-11 | METAL CHIP | 1K | 5% | 1/10W |
| R774 | 1-216-821-11 | METAL CHIP | 1K | 5% | 1/10W |
| R775 | 1-216-864-11 | SHORT CHIP | 0 | | |
| R776 | 1-216-295-11 | SHORT CHIP | 0 | | |

| Ref. No. | Part No. | Description | | | Remark |
|---|---|---|---|---|---|
| | | < VIBRATOR > | | | |
| X700 | 1-795-807-11 | VIBRATOR, CRYSTAL (25MHz) | | | |
| ********** | | | | | |
| | A-1382-431-A | FL BOARD, COMPLETE | | | |
| | | ********** | | | |
| | 3-273-731-01 | HOLDER (FL) | | | |
| | | < CAPACITOR > | | | |
| C101 | 1-126-382-11 | ELECT | 100uF | 20% | 16V |
| C102 | 1-162-968-11 | CERAMIC CHIP | 0.0047uF | 10% | 50V |
| C103 | 1-163-037-11 | CERAMIC CHIP | 0.022uF | 10% | 50V |
| C104 | 1-162-974-11 | CERAMIC CHIP | 0.01uF | | 50V |
| C105 | 1-119-943-11 | ELECT | 47uF | 20% | 50V |
| C106 | 1-107-826-11 | CERAMIC CHIP | 0.1uF | 10% | 16V |
| C107 | 1-126-157-11 | ELECT | 10uF | 20% | 16V |
| C108 | 1-107-826-11 | CERAMIC CHIP | 0.1uF | 10% | 16V |
| C116 | 1-126-157-11 | ELECT | 10uF | 20% | 16V |
| C117 | 1-162-970-11 | CERAMIC CHIP | 0.01uF | 10% | 25V |
| C189 | 1-165-989-11 | CERAMIC CHIP | 10uF | 10% | 6.3V |
| C190 | 1-107-826-11 | CERAMIC CHIP | 0.1uF | 10% | 16V |
| | | < CONNECTOR > | | | |
| CN100 | 1-779-546-11 | CONNECTOR, FFC (LIF(NON-ZIF)) 9P | | | |
| | | < DIODE > | | | |
| D100 | 6-501-579-01 | DIODE MC2837 | | | |
| D101 | 6-501-579-01 | DIODE MC2837 | | | |
| D102 | 6-501-729-01 | DIODE MAZ8051GLLS0 | | | |
| D103 | 6-501-817-01 | DIODE MA2J1110GLS0 | | | |
| | | < IC > | | | |
| IC100 | 6-701-729-01 | IC PT6315 | | | |
| IC101 | 6-600-349-21 | IC NJL23H400A (IR) | | | |
| | | < COIL > | | | |
| L100 | 1-410-671-31 | INDUCTOR | 47uH | | |
| L101 | 1-410-671-31 | INDUCTOR | 47uH | | |
| L102 | 1-410-671-31 | INDUCTOR | 47uH | | |
| | | < FLUORESCENT INDICATOR TUBE > | | | |
| ND100 | 1-519-988-11 | INDICATOR TUBE, FLUORESCENT | | | |
| | | < TRANSISTOR > | | | |
| Q100 | 6-550-065-01 | TRANSISTOR CPH5504-TL-E | | | |
| | | < RESISTOR > | | | |
| R100 | 1-216-828-11 | METAL CHIP | 3.9K | 5% | 1/10W |
| R101 | 1-216-839-11 | METAL CHIP | 33K | 5% | 1/10W |
| R102 | 1-216-805-11 | METAL CHIP | 47 | 5% | 1/10W |
| R103 | 1-216-805-11 | METAL CHIP | 47 | 5% | 1/10W |
| R104 | 1-216-809-11 | METAL CHIP | 100 | 5% | 1/10W |
| R105 | 1-216-809-11 | METAL CHIP | 100 | 5% | 1/10W |
| R106 | 1-216-809-11 | METAL CHIP | 100 | 5% | 1/10W |
| R107 | 1-216-844-11 | METAL CHIP | 82K | 5% | 1/10W |
| R108 | 1-216-805-11 | METAL CHIP | 47 | 5% | 1/10W |

| Ref. No. | Part No. | Description | | | Remark |
|---|---|---|---|---|---|
| | | < TRANSFORMER > | | | |
| T100 | 1-443-645-11 | TRANSFORMER, DC CONVERTER | | | |
| ********** | | | | | |
| | A-1458-469-A | IO-COMPONENT BOARD, COMPLETE (DZ870M) | | | |
| | A-1459-177-A | IO-COMPONENT BOARD, COMPLETE (DZ870W:EXCEPT KR) | | | |
| | A-1459-220-A | IO-COMPONENT BOARD, COMPLETE (DZ870KW) | | | |
| | A-1539-177-A | IO-COMPONENT BOARD, COMPLETE (DZ870W:KR) | | | |
| | | ********** | | | |
| | | < CAPACITOR > | | | |
| C454 | 1-165-908-11 | CERAMIC CHIP | 1uF | 10% | 10V |
| C456 | 1-126-933-11 | ELECT | 100uF | 20% | 16V |
| C457 | 1-165-908-11 | CERAMIC CHIP | 1uF | 10% | 10V |
| C458 | 1-126-933-11 | ELECT | 100uF | 20% | 16V |
| C460 | 1-165-908-11 | CERAMIC CHIP | 1uF | 10% | 10V |
| C462 | 1-126-916-11 | ELECT | 1000uF | 20% | 6.3V |
| C463 | 1-107-826-11 | CERAMIC CHIP | 0.1uF | 10% | 16V |
| C466 | 1-126-965-11 | ELECT | 22uF | 20% | 50V |
| C467 | 1-162-964-11 | CERAMIC CHIP | 0.001uF | 10% | 50V |
| C468 | 1-162-966-11 | CERAMIC CHIP | 0.0022uF | 10% | 50V |
| C470 | 1-126-964-11 | ELECT | 10uF | 20% | 50V |
| C473 | 1-107-826-11 | CERAMIC CHIP | 0.1uF | 10% | 16V |
| C474 | 1-126-925-11 | ELECT | 470uF | 20% | 10V |
| C476 | 1-126-964-11 | ELECT | 10uF | 20% | 50V |
| C478 | 1-126-916-11 | ELECT | 1000uF | 20% | 6.3V |
| C480 | 1-165-908-11 | CERAMIC CHIP | 1uF | 10% | 10V |
| C481 | 1-162-927-11 | CERAMIC CHIP | 100PF | 5% | 50V |
| C482 | 1-162-927-11 | CERAMIC CHIP | 100PF | 5% | 50V |
| C488 | 1-162-964-11 | CERAMIC CHIP | 0.001uF | 10% | 50V |
| C489 | 1-162-966-11 | CERAMIC CHIP | 0.0022uF | 10% | 50V |
| C491 | 1-162-960-11 | CERAMIC CHIP | 220PF | 10% | 50V |
| C495 | 1-104-662-11 | ELECT | 22uF | 20% | 25V |
| C496 | 1-162-960-11 | CERAMIC CHIP | 220PF | 10% | 50V |
| C499 | 1-104-662-11 | ELECT | 22uF | 20% | 25V |
| C504 | 1-107-826-11 | CERAMIC CHIP | 0.1uF | 10% | 16V |
| C505 | 1-162-960-11 | CERAMIC CHIP | 220PF | 10% | 50V |
| C509 | 1-104-662-11 | ELECT | 22uF | 20% | 25V |
| C511 | 1-162-960-11 | CERAMIC CHIP | 220PF | 10% | 50V |
| C512 | 1-104-662-11 | ELECT | 22uF | 20% | 25V |
| C514 | 1-162-927-11 | CERAMIC CHIP | 100PF | 5% | 50V |
| C518 | 1-126-960-11 | ELECT | 1uF | 20% | 50V |
| C521 | 1-162-960-11 | CERAMIC CHIP | 220PF | 10% | 50V |
| C524 | 1-104-662-11 | ELECT | 22uF | 20% | 25V |
| C525 | 1-162-960-11 | CERAMIC CHIP | 220PF | 10% | 50V |
| C528 | 1-126-933-11 | ELECT | 100uF | 20% | 16V |
| C529 | 1-107-826-11 | CERAMIC CHIP | 0.1uF | 10% | 16V |
| C530 | 1-104-662-11 | ELECT | 22uF | 20% | 25V |
| C533 | 1-126-960-11 | ELECT | 1uF | 20% | 50V |
| C535 | 1-162-960-11 | CERAMIC CHIP | 220PF | 10% | 50V |
| C536 | 1-104-662-11 | ELECT | 22uF | 20% | 25V |
| C537 | 1-162-960-11 | CERAMIC CHIP | 220PF | 10% | 50V |
| C538 | 1-104-662-11 | ELECT | 22uF | 20% | 25V |
| C539 | 1-126-957-11 | ELECT | 0.22uF | 20% | 50V (DZ870KW/DZ870M) |
| C540 | 1-126-957-11 | ELECT | 0.22uF | 20% | 50V (DZ870KW/DZ870M) |
| C540 | 1-126-960-11 | ELECT | 1uF | 20% | 50V (DZ870W) |

| Ref. No. | Part No. | Description | | | Remark |
|---|---|---|---|---|---|
| C541 | 1-126-933-11 | ELECT | 100uF | 20% | 16V |
| C542 | 1-107-826-11 | CERAMIC CHIP | 0.1uF | 10% | 16V |
| C543 | 1-126-960-11 | ELECT | 1uF | 20% | 50V (DZ870KW/DZ870M) |
| C544 | 1-126-960-11 | ELECT | 1uF | 20% | 50V (DZ870KW/DZ870M) |
| C546 | 1-107-826-11 | CERAMIC CHIP | 0.1uF | 10% | 16V (DZ870KW/DZ870M) |
| C547 | 1-126-933-11 | ELECT | 100uF | 20% | 16V (DZ870KW/DZ870M) |
| C548 | 1-127-573-11 | CERAMIC CHIP | 1uF | 10% | 16V |
| C549 | 1-126-947-11 | ELECT | 47uF | 20% | 35V |
| C550 | 1-162-927-11 | CERAMIC CHIP | 100PF | 5% | 50V (DZ870KW/DZ870M) |
| C551 | 1-162-927-11 | CERAMIC CHIP | 100PF | 5% | 50V (DZ870KW/DZ870M) |
| C552 | 1-107-826-11 | CERAMIC CHIP | 0.1uF | 10% | 16V |
| C553 | 1-126-933-11 | ELECT | 100uF | 20% | 16V (DZ870KW/DZ870M) |
| C554 | 1-126-966-11 | ELECT | 33uF | 20% | 50V (DZ870KW/DZ870M) |
| C555 | 1-126-964-11 | ELECT | 10uF | 20% | 50V (DZ870KW/DZ870M) |
| C556 | 1-107-826-11 | CERAMIC CHIP | 0.1uF | 10% | 16V |
| C557 | 1-126-933-11 | ELECT | 100uF | 20% | 16V |
| C558 | 1-104-662-11 | ELECT | 22uF | 20% | 25V |
| C559 | 1-104-662-11 | ELECT | 22uF | 20% | 25V |
| C560 | 1-126-933-11 | ELECT | 100uF | 20% | 16V (DZ870KW/DZ870M) |
| C561 | 1-162-968-11 | CERAMIC CHIP | 0.0047uF | 10% | 50V (DZ870M/DZ870W:KR) |
| C562 | 1-162-968-11 | CERAMIC CHIP | 0.0047uF | 10% | 50V (DZ870M/DZ870W:KR) |
| C563 | 1-162-921-11 | CERAMIC CHIP | 33PF | 5% | 50V (DZ870KW/DZ870M) |
| C564 | 1-126-933-11 | ELECT | 100uF | 20% | 16V (DZ870KW/DZ870M) |
| C565 | 1-126-964-11 | ELECT | 10uF | 20% | 50V (DZ870KW/DZ870M) |
| C566 | 1-126-964-11 | ELECT | 10uF | 20% | 50V (DZ870KW/DZ870M) |
| C567 | 1-107-826-11 | CERAMIC CHIP | 0.1uF | 10% | 16V (DZ870KW/DZ870M) |
| C568 | 1-126-933-11 | ELECT | 100uF | 20% | 16V (DZ870KW/DZ870M) |
| C569 | 1-126-964-11 | ELECT | 10uF | 20% | 50V |
| C620 | 1-107-826-11 | CERAMIC CHIP | 0.1uF | 10% | 16V |
| C621 | 1-165-908-11 | CERAMIC CHIP | 1uF | 10% | 10V |
| C622 | 1-165-908-11 | CERAMIC CHIP | 1uF | 10% | 10V |
| | | < CONNECTOR > | | | |
| CN402 | 1-779-285-11 | CONNECTOR, FFC (LIF(NON-ZIF)) 17P | | | |
| CN406 | 1-779-279-11 | CONNECTOR, FFC (LIF(NON-ZIF)) 11P (DZ870KW) | | | |
| CN408 | 1-779-277-11 | CONNECTOR, FFC (LIF(NON-ZIF)) 9P (DZ870W) | | | |
| CN410 | 1-779-275-11 | CONNECTOR, FFC (LIF(NON-ZIF)) 7P (DZ870KW/DZ870M) | | | |
| CN411 | 1-564-707-11 | PIN, CONNECTOR (SMALL TYPE) 5P (DZ870KW/DZ870M) | | | |
| CN412 | 1-564-706-11 | PIN, CONNECTOR (SMALL TYPE) 4P (DZ870W) | | | |
| CN413 | 1-778-226-21 | CONNECTOR, BOARD TO BOARD 6P (DZ870KW/DZ870M) | | | |
| CN414 | 1-568-830-11 | CONNECTOR, FFC 11P (DZ870M) | | | |
| CN415 | 1-779-275-11 | CONNECTOR, FFC (LIF(NON-ZIF)) 7P | | | |

## IO-COMPONENT

| Ref. No. | Part No. | Description | Remark |
|---|---|---|---|
| CN416 | 1-779-281-11 | CONNECTOR, FFC (LIF(NON-ZIF)) 13P (DZ870M) | |
| CN418 | 1-779-273-11 | CONNECTOR, FFC (LIF(NON-ZIF)) 5P (DZ870W) | |
| CN419 | 1-784-770-11 | CONNECTOR, FFC 9P (DZ870KW/DZ870W) | |
| | | < DIODE > | |
| D405 | 6-501-579-01 | DIODE MC2837 | |
| D406 | 6-501-579-01 | DIODE MC2837 | |
| D407 | 8-719-058-24 | DIODE RB501V-40TE-17 | |
| D408 | 6-501-817-01 | DIODE MA2J1110GLS0 (DZ870KW/DZ870M) | |
| D409 | 6-501-817-01 | DIODE MA2J1110GLS0 (DZ870KW/DZ870M) | |
| D410 | 6-501-728-01 | DIODE MAZ8051G0LS0 (DZ870KW/DZ870M) | |
| D411 | 6-501-579-01 | DIODE MC2837 | |
| D412 | 6-501-728-01 | DIODE MAZ8051G0LS0 | |
| | | < IC > | |
| IC404 | 6-710-470-01 | IC MM1758AFBE | |
| IC407 | 8-759-385-76 | IC MC14052BDR2 | |
| IC409 | 8-759-385-76 | IC MC14052BDR2 | |
| IC411 | 8-759-385-76 | IC MC14052BDR2 | |
| IC412 | 6-706-078-01 | IC M62429FP-TP (DZ870KW/DZ870M) | |
| IC413 | 6-700-830-01 | IC KIA7809API | |
| IC414 | 8-759-832-10 | IC LA3210A/B-E (DZ870KW/DZ870M) | |
| IC620 | 6-705-338-01 | IC TK11250CMCL-G | |
| | | < JACK > | |
| J401 | 1-817-601-11 | JACK, PIN 3P (COMPONENT VIDEO OUT) | |
| J403 | 1-778-940-11 | JACK, PIN 2P (SAT/CABLE (AUDIO IN R/L)) | |
| J404 | 1-820-862-11 | JACK, PIN 3P (VIDEO OUT,TV (AUDIO IN R/L)) | |
| | | < JUMPER RESISTOR > | |
| JR502 | 1-216-864-11 | SHORT CHIP 0 | |
| JR503 | 1-216-864-11 | SHORT CHIP 0 | |
| JR504 | 1-216-864-11 | SHORT CHIP 0 | |
| JR505 | 1-216-864-11 | SHORT CHIP 0 | |
| JR506 | 1-216-864-11 | SHORT CHIP 0 | |
| JR507 | 1-216-864-11 | SHORT CHIP 0 | |
| JR508 | 1-216-864-11 | SHORT CHIP 0 | |
| JR515 | 1-216-864-11 | SHORT CHIP 0 | |
| JR516 | 1-216-864-11 | SHORT CHIP 0 | |
| | | < COIL > | |
| L404 | 1-469-525-91 | INDUCTOR 10uH | |
| L406 | 1-469-525-91 | INDUCTOR 10uH (DZ870KW/DZ870M) | |
| L407 | 1-469-525-91 | INDUCTOR 10uH | |
| | | < TRANSISTOR > | |
| Q408 | 8-729-027-52 | TRANSISTOR DTC124EKA-T146 | |
| Q409 | 8-729-027-52 | TRANSISTOR DTC124EKA-T146 | |
| Q410 | 8-729-027-52 | TRANSISTOR DTC124EKA-T146 | |
| Q411 | 8-729-027-52 | TRANSISTOR DTC124EKA-T146 | |
| Q412 | 8-729-027-52 | TRANSISTOR DTC124EKA-T146 | |
| Q413 | 8-729-027-52 | TRANSISTOR DTC124EKA-T146 | |
| Q414 | 8-729-027-52 | TRANSISTOR DTC124EKA-T146 | (DZ870KW/DZ870M) |
| Q415 | 8-729-027-52 | TRANSISTOR DTC124EKA-T146 | (DZ870KW/DZ870M) |
| | | < RESISTOR > | |
| R439 | 1-218-285-11 | METAL CHIP 75 5% 1/10W | |
| R444 | 1-218-827-11 | METAL CHIP 150 0.5% 1/10W | |
| R445 | 1-218-827-11 | METAL CHIP 150 0.5% 1/10W | |
| R446 | 1-218-827-11 | METAL CHIP 150 0.5% 1/10W | |
| R447 | 1-218-827-11 | METAL CHIP 150 0.5% 1/10W | |
| R448 | 1-218-827-11 | METAL CHIP 150 0.5% 1/10W | |
| R449 | 1-218-285-11 | METAL CHIP 75 5% 1/10W | |
| R452 | 1-218-285-11 | METAL CHIP 75 5% 1/10W | |
| R458 | 1-216-864-11 | SHORT CHIP 0 | |
| R459 | 1-216-864-11 | SHORT CHIP 0 | |
| R468 | 1-218-285-11 | METAL CHIP 75 5% 1/10W | |
| R473 | 1-218-285-11 | METAL CHIP 75 5% 1/10W | |
| R479 | 1-216-829-11 | METAL CHIP 4.7K 5% 1/10W | |
| R480 | 1-216-841-11 | METAL CHIP 47K 5% 1/10W | |
| R481 | 1-216-841-11 | METAL CHIP 47K 5% 1/10W | |
| R485 | 1-216-829-11 | METAL CHIP 4.7K 5% 1/10W | |
| R486 | 1-216-829-11 | METAL CHIP 4.7K 5% 1/10W | |
| R489 | 1-216-829-11 | METAL CHIP 4.7K 5% 1/10W | |
| R490 | 1-216-841-11 | METAL CHIP 47K 5% 1/10W | |
| R491 | 1-216-841-11 | METAL CHIP 47K 5% 1/10W | |
| R494 | 1-216-829-11 | METAL CHIP 4.7K 5% 1/10W | |
| R495 | 1-216-833-11 | METAL CHIP 10K 5% 1/10W | |
| R496 | 1-216-841-11 | METAL CHIP 47K 5% 1/10W | |
| R497 | 1-216-841-11 | METAL CHIP 47K 5% 1/10W | |
| R500 | 1-216-821-11 | METAL CHIP 1K 5% 1/10W | |
| R503 | 1-216-829-11 | METAL CHIP 4.7K 5% 1/10W | |
| R504 | 1-216-829-11 | METAL CHIP 4.7K 5% 1/10W | |
| R505 | 1-216-833-11 | METAL CHIP 10K 5% 1/10W | |
| R506 | 1-216-829-11 | METAL CHIP 4.7K 5% 1/10W | |
| R507 | 1-216-841-11 | METAL CHIP 47K 5% 1/10W | |
| R508 | 1-216-841-11 | METAL CHIP 47K 5% 1/10W | |
| R509 | 1-216-821-11 | METAL CHIP 1K 5% 1/10W | |
| R513 | 1-216-864-11 | SHORT CHIP 0 | |
| R514 | 1-216-864-11 | SHORT CHIP 0 | |
| R515 | 1-216-864-11 | SHORT CHIP 0 | |
| R516 | 1-216-864-11 | SHORT CHIP 0 | |
| R523 | 1-216-864-11 | SHORT CHIP 0 | |
| R527 | 1-216-841-11 | METAL CHIP 47K 5% 1/10W | |
| R528 | 1-216-841-11 | METAL CHIP 47K 5% 1/10W | |
| R530 | 1-216-864-11 | SHORT CHIP 0 | |
| R533 | 1-216-827-11 | METAL CHIP 3.3K 5% 1/10W | |
| R536 | 1-216-833-11 | METAL CHIP 10K 5% 1/10W | |
| R538 | 1-216-827-11 | METAL CHIP 3.3K 5% 1/10W | |
| R539 | 1-216-841-11 | METAL CHIP 47K 5% 1/10W | |
| R540 | 1-216-841-11 | METAL CHIP 47K 5% 1/10W | |
| R541 | 1-216-864-11 | SHORT CHIP 0 | |
| R543 | 1-216-821-11 | METAL CHIP 1K 5% 1/10W | |
| R546 | 1-216-864-11 | SHORT CHIP 0 | |
| R548 | 1-216-864-11 | SHORT CHIP 0 | |
| R550 | 1-216-833-11 | METAL CHIP 10K 5% 1/10W | |
| R551 | 1-216-829-11 | METAL CHIP 4.7K 5% 1/10W | |
| R552 | 1-216-841-11 | METAL CHIP 47K 5% 1/10W | |
| R553 | 1-216-841-11 | METAL CHIP 47K 5% 1/10W | |
| R556 | 1-216-821-11 | METAL CHIP 1K 5% 1/10W | |
| R557 | 1-216-809-11 | METAL CHIP 100 5% 1/10W | |
| R558 | 1-216-809-11 | METAL CHIP 100 5% 1/10W | |
| R559 | 1-216-829-11 | METAL CHIP 4.7K 5% 1/10W | |
| R561 | 1-216-829-11 | METAL CHIP 4.7K 5% 1/10W | |
| R563 | 1-216-864-11 | SHORT CHIP 0 | |
| R564 | 1-216-829-11 | METAL CHIP 4.7K 5% 1/10W | |
| R566 | 1-216-841-11 | METAL CHIP 47K 5% 1/10W | |
| R567 | 1-216-841-11 | METAL CHIP 47K 5% 1/10W | |

**IO-COMPONENT** **IO-SCART**

| Ref. No. | Part No. | Description | | | Remark |
|---|---|---|---|---|---|
| R569 | 1-216-833-11 | METAL CHIP | 10K | 5% | 1/10W (DZ870KW/DZ870M) |
| R570 | 1-216-829-11 | METAL CHIP | 4.7K | 5% | 1/10W (DZ870W) |
| R570 | 1-216-833-11 | METAL CHIP | 10K | 5% | 1/10W (DZ870KW/DZ870M) |
| R571 | 1-216-829-11 | METAL CHIP | 4.7K | 5% | 1/10W (DZ870KW/DZ870M) |
| R572 | 1-216-829-11 | METAL CHIP | 4.7K | 5% | 1/10W |
| R574 | 1-216-864-11 | SHORT CHIP | 0 (DZ870W) | | |
| R575 | 1-216-833-11 | METAL CHIP | 10K | 5% | 1/10W |
| R577 | 1-216-864-11 | SHORT CHIP | 0 | | |
| R579 | 1-216-821-11 | METAL CHIP | 1K | 5% | 1/10W |
| R580 | 1-216-809-11 | METAL CHIP | 100 | 5% | 1/10W (DZ870KW/DZ870M) |
| R581 | 1-216-809-11 | METAL CHIP | 100 | 5% | 1/10W (DZ870KW/DZ870M) |
| R582 | 1-216-833-11 | METAL CHIP | 10K | 5% | 1/10W |
| R583 | 1-216-864-11 | SHORT CHIP | 0 (DZ870KW/DZ870M) | | |
| R584 | 1-216-821-11 | METAL CHIP | 1K | 5% | 1/10W |
| R585 | 1-216-833-11 | METAL CHIP | 10K | 5% | 1/10W (DZ870KW/DZ870M) |
| R586 | 1-216-833-11 | METAL CHIP | 10K | 5% | 1/10W (DZ870KW/DZ870M) |
| R587 | 1-216-833-11 | METAL CHIP | 10K | 5% | 1/10W (DZ870KW/DZ870M) |
| R588 | 1-216-833-11 | METAL CHIP | 10K | 5% | 1/10W (DZ870KW/DZ870M) |
| R589 | 1-216-833-11 | METAL CHIP | 10K | 5% | 1/10W (DZ870KW/DZ870M) |
| R590 | 1-216-833-11 | METAL CHIP | 10K | 5% | 1/10W (DZ870KW/DZ870M) |
| R591 | 1-216-864-11 | SHORT CHIP | 0 | | |
| R592 | 1-216-809-11 | METAL CHIP | 100 | 5% | 1/10W |
| R593 | 1-216-864-11 | SHORT CHIP | 0 | | |
| R594 | 1-216-833-11 | METAL CHIP | 10K | 5% | 1/10W (DZ870KW/DZ870M) |
| R595 | 1-216-864-11 | SHORT CHIP | 0 | | |
| R596 | 1-216-833-11 | METAL CHIP | 10K | 5% | 1/10W (DZ870KW/DZ870M) |
| R597 | 1-216-845-11 | METAL CHIP | 100K | 5% | 1/10W (DZ870KW/DZ870M) |
| R598 | 1-216-833-11 | METAL CHIP | 10K | 5% | 1/10W (DZ870KW/DZ870M) |
| R598 | 1-216-841-11 | METAL CHIP | 47K | 5% | 1/10W (DZ870W) |
| R599 | 1-216-833-11 | METAL CHIP | 10K | 5% | 1/10W (DZ870KW/DZ870M) |
| R599 | 1-216-841-11 | METAL CHIP | 47K | 5% | 1/10W (DZ870W) |
| R600 | 1-216-845-11 | METAL CHIP | 100K | 5% | 1/10W |
| R601 | 1-216-845-11 | METAL CHIP | 100K | 5% | 1/10W |
| R602 | 1-216-845-11 | METAL CHIP | 100K | 5% | 1/10W |
| R603 | 1-216-845-11 | METAL CHIP | 100K | 5% | 1/10W |
| R604 | 1-216-833-11 | METAL CHIP | 10K | 5% | 1/10W (DZ870KW/DZ870M) |
| R605 | 1-216-837-11 | METAL CHIP | 22K | 5% | 1/10W (DZ870KW/DZ870M) |
| R606 | 1-216-864-11 | SHORT CHIP | 0 (DZ870KW/DZ870M) | | |
| R607 | 1-216-864-11 | SHORT CHIP | 0 (DZ870KW/DZ870M) | | |
| R608 | 1-216-815-11 | METAL CHIP | 330 | 5% | 1/10W (DZ870KW/DZ870M) |
| R609 | 1-216-864-11 | SHORT CHIP | 0 | | |
| R610 | 1-216-864-11 | SHORT CHIP | 0 | | |
| R611 | 1-216-864-11 | SHORT CHIP | 0 (DZ870M) | | |
| R612 | 1-216-864-11 | SHORT CHIP | 0 (DZ870M) | | |
| R613 | 1-216-825-11 | METAL CHIP | 2.2K | 5% | 1/10W (DZ870KW/DZ870M) |
| R614 | 1-216-833-11 | METAL CHIP | 10K | 5% | 1/10W (DZ870KW/DZ870M) |
| ⚠ R615 | 1-215-865-11 | METAL OXIDE | 220 | 5% | 1W F (DZ870KW/DZ870M) |
| R616 | 1-216-864-11 | SHORT CHIP | 0 (DZ870KW) | | |
| R617 | 1-216-864-11 | SHORT CHIP | 0 (DZ870KW) | | |
| R620 | 1-216-821-11 | METAL CHIP | 1K | 5% | 1/10W |
| ⚠ R621 | 1-215-865-11 | METAL OXIDE | 220 | 5% | 1W F |
| R622 | 1-216-864-11 | SHORT CHIP | 0 | | |
| R623 | 1-216-864-11 | SHORT CHIP | 0 | | |

**********

| | | | | | |
|---|---|---|---|---|---|
| | A-1458-493-A | IO-SCART BOARD, COMPLETE (DZ860W) | | | |
| | | ********** | | | |
| | | < CAPACITOR > | | | |
| C400 | 1-162-966-11 | CERAMIC CHIP | 0.0022uF | 10% | 50V |
| C401 | 1-162-964-11 | CERAMIC CHIP | 0.001uF | 10% | 50V |
| C402 | 1-162-964-11 | CERAMIC CHIP | 0.001uF | 10% | 50V |
| C403 | 1-126-933-11 | ELECT | 100uF | 20% | 16V |
| C404 | 1-126-933-11 | ELECT | 100uF | 20% | 16V |
| C405 | 1-162-927-11 | CERAMIC CHIP | 100PF | 5% | 50V |
| C406 | 1-162-927-11 | CERAMIC CHIP | 100PF | 5% | 50V |
| C407 | 1-162-927-11 | CERAMIC CHIP | 100PF | 5% | 50V |
| C408 | 1-162-927-11 | CERAMIC CHIP | 100PF | 5% | 50V |
| C409 | 1-162-927-11 | CERAMIC CHIP | 100PF | 5% | 50V |
| C410 | 1-162-927-11 | CERAMIC CHIP | 100PF | 5% | 50V |
| C411 | 1-126-933-11 | ELECT | 100uF | 20% | 16V |
| C412 | 1-162-964-11 | CERAMIC CHIP | 0.001uF | 10% | 50V |
| C413 | 1-126-933-11 | ELECT | 100uF | 20% | 16V |
| C414 | 1-126-933-11 | ELECT | 100uF | 20% | 16V |
| C415 | 1-107-826-11 | CERAMIC CHIP | 0.1uF | 10% | 16V |
| C416 | 1-126-964-11 | ELECT | 10uF | 20% | 50V |
| C417 | 1-126-916-11 | ELECT | 1000uF | 20% | 6.3V |
| C419 | 1-165-908-11 | CERAMIC CHIP | 1uF | 10% | 10V |
| C420 | 1-107-826-11 | CERAMIC CHIP | 0.1uF | 10% | 16V |
| C421 | 1-165-908-11 | CERAMIC CHIP | 1uF | 10% | 10V |
| C422 | 1-165-908-11 | CERAMIC CHIP | 1uF | 10% | 10V |
| C423 | 1-165-908-11 | CERAMIC CHIP | 1uF | 10% | 10V |
| C424 | 1-126-933-11 | ELECT | 100uF | 20% | 16V |
| C425 | 1-126-964-11 | ELECT | 10uF | 20% | 50V |
| C443 | 1-162-964-11 | CERAMIC CHIP | 0.001uF | 10% | 50V |
| C481 | 1-162-927-11 | CERAMIC CHIP | 100PF | 5% | 50V |
| C482 | 1-162-927-11 | CERAMIC CHIP | 100PF | 5% | 50V |
| C491 | 1-162-960-11 | CERAMIC CHIP | 220PF | 10% | 50V |
| C495 | 1-104-662-11 | ELECT | 22uF | 20% | 25V |
| C496 | 1-162-960-11 | CERAMIC CHIP | 220PF | 10% | 50V |
| C499 | 1-104-662-11 | ELECT | 22uF | 20% | 25V |
| C504 | 1-107-826-11 | CERAMIC CHIP | 0.1uF | 10% | 16V |
| C505 | 1-162-960-11 | CERAMIC CHIP | 220PF | 10% | 50V |
| C509 | 1-104-662-11 | ELECT | 22uF | 20% | 25V |
| C511 | 1-162-960-11 | CERAMIC CHIP | 220PF | 10% | 50V |
| C512 | 1-104-662-11 | ELECT | 22uF | 20% | 25V |
| C518 | 1-126-960-11 | ELECT | 1uF | 20% | 50V |
| C521 | 1-162-960-11 | CERAMIC CHIP | 220PF | 10% | 50V |
| C524 | 1-104-662-11 | ELECT | 22uF | 20% | 25V |
| C525 | 1-162-960-11 | CERAMIC CHIP | 220PF | 10% | 50V |

## IO-SCART

| Ref. No. | Part No. | Description | | | Remark |
|---|---|---|---|---|---|
| C528 | 1-126-933-11 | ELECT | 100uF | 20% | 16V |
| C529 | 1-107-826-11 | CERAMIC CHIP | 0.1uF | 10% | 16V |
| C530 | 1-104-662-11 | ELECT | 22uF | 20% | 25V |
| C533 | 1-126-960-11 | ELECT | 1uF | 20% | 50V |
| C535 | 1-162-960-11 | CERAMIC CHIP | 220PF | 10% | 50V |
| C536 | 1-104-662-11 | ELECT | 22uF | 20% | 25V |
| C537 | 1-162-960-11 | CERAMIC CHIP | 220PF | 10% | 50V |
| C538 | 1-104-662-11 | ELECT | 22uF | 20% | 25V |
| C540 | 1-126-960-11 | ELECT | 1uF | 20% | 50V |
| C541 | 1-126-933-11 | ELECT | 100uF | 20% | 16V |
| C542 | 1-107-826-11 | CERAMIC CHIP | 0.1uF | 10% | 16V |
| C548 | 1-127-573-11 | CERAMIC CHIP | 1uF | 10% | 16V |
| C549 | 1-126-947-11 | ELECT | 47uF | 20% | 35V |
| C552 | 1-107-826-11 | CERAMIC CHIP | 0.1uF | 10% | 16V |
| C556 | 1-107-826-11 | CERAMIC CHIP | 0.1uF | 10% | 16V |
| C557 | 1-126-933-11 | ELECT | 100uF | 20% | 16V |
| C558 | 1-104-662-11 | ELECT | 22uF | 20% | 25V |
| C559 | 1-104-662-11 | ELECT | 22uF | 20% | 25V |
| C561 | 1-162-968-11 | CERAMIC CHIP | 0.0047uF | 10% | 50V |
| C562 | 1-162-968-11 | CERAMIC CHIP | 0.0047uF | 10% | 50V |
| C569 | 1-126-964-11 | ELECT | 10uF | 20% | 50V |
| C620 | 1-107-826-11 | CERAMIC CHIP | 0.1uF | 10% | 16V |
| C621 | 1-165-908-11 | CERAMIC CHIP | 1uF | 10% | 10V |
| C622 | 1-165-908-11 | CERAMIC CHIP | 1uF | 10% | 10V |
| | | < CONNECTOR > | | | |
| CN400 | 1-816-044-11 | CONNECTOR, SQUARE TYPE 21P (EURO AV ⇨ OUTPUT(TO TV)) | | | |
| CN401 | 1-779-287-11 | CONNECTOR, FFC (LIF(NON-ZIF)) 19P | | | |
| CN405 | 1-779-279-11 | CONNECTOR, FFC (LIF(NON-ZIF)) 11P | | | |
| CN410 | 1-779-273-11 | CONNECTOR, FFC (LIF(NON-ZIF)) 5P | | | |
| CN412 | 1-564-706-11 | PIN, CONNECTOR (SMALL TYPE) 4P | | | |
| CN414 | 1-568-830-11 | CONNECTOR, FFC 11P | | | |
| CN415 | 1-779-275-11 | CONNECTOR, FFC (LIF(NON-ZIF)) 7P | | | |
| | | < DIODE > | | | |
| D401 | 6-501-817-01 | DIODE MA2J1110GLS0 | | | |
| D402 | 6-501-817-01 | DIODE MA2J1110GLS0 | | | |
| D407 | 8-719-058-24 | DIODE RB501V-40TE-17 | | | |
| D411 | 6-501-579-01 | DIODE MC2837 | | | |
| D412 | 6-501-728-01 | DIODE MAZ8051G0LS0 | | | |
| | | < IC > | | | |
| IC400 | 6-710-470-01 | IC MM1758AFBE | | | |
| IC407 | 8-759-385-76 | IC MC14052BDR2 | | | |
| IC409 | 8-759-385-76 | IC MC14052BDR2 | | | |
| IC411 | 8-759-385-76 | IC MC14052BDR2 | | | |
| IC413 | 6-700-830-01 | IC KIA7809API | | | |
| IC620 | 6-705-338-01 | IC TK11250CMCL-G | | | |
| | | < JACK > | | | |
| J403 | 1-778-940-11 | JACK, PIN 2P (LINE (AUDIO IN R/L)) | | | |
| | | < JUMPER RESISTOR > | | | |
| JR403 | 1-216-864-11 | SHORT CHIP | 0 | | |
| JR404 | 1-216-864-11 | SHORT CHIP | 0 | | |
| JR405 | 1-216-864-11 | SHORT CHIP | 0 | | |
| JR406 | 1-216-864-11 | SHORT CHIP | 0 | | |
| JR407 | 1-216-864-11 | SHORT CHIP | 0 | | |
| JW427 | 1-216-864-11 | SHORT CHIP | 0 | | |

| Ref. No. | Part No. | Description | | | Remark |
|---|---|---|---|---|---|
| JW433 | 1-216-864-11 | SHORT CHIP | 0 | | |
| | | < COIL > | | | |
| L401 | 1-469-525-91 | INDUCTOR | 10uH | | |
| L407 | 1-469-525-91 | INDUCTOR | 10uH | | |
| | | < TRANSISTOR > | | | |
| Q400 | 8-729-038-28 | TRANSISTOR | RT1N441C-TP-1 | | |
| Q401 | 8-729-038-28 | TRANSISTOR | RT1N441C-TP-1 | | |
| Q402 | 8-729-620-07 | TRANSISTOR | 2SC3052EF-T1-LEF | | |
| Q403 | 8-729-027-52 | TRANSISTOR | DTC124EKA-T146 | | |
| Q404 | 8-729-027-23 | TRANSISTOR | DTA114EKA-T146 | | |
| Q405 | 8-729-038-28 | TRANSISTOR | RT1N441C-TP-1 | | |
| Q406 | 8-729-027-23 | TRANSISTOR | DTA114EKA-T146 | | |
| Q408 | 8-729-027-52 | TRANSISTOR | DTC124EKA-T146 | | |
| Q409 | 8-729-027-52 | TRANSISTOR | DTC124EKA-T146 | | |
| Q410 | 8-729-027-52 | TRANSISTOR | DTC124EKA-T146 | | |
| Q411 | 8-729-027-52 | TRANSISTOR | DTC124EKA-T146 | | |
| Q412 | 8-729-027-52 | TRANSISTOR | DTC124EKA-T146 | | |
| Q413 | 8-729-027-52 | TRANSISTOR | DTC124EKA-T146 | | |
| | | < RESISTOR > | | | |
| R400 | 1-216-815-11 | METAL CHIP | 330 | 5% | 1/10W |
| R401 | 1-216-815-11 | METAL CHIP | 330 | 5% | 1/10W |
| R402 | 1-216-815-11 | METAL CHIP | 330 | 5% | 1/10W |
| R403 | 1-216-849-11 | METAL CHIP | 220K | 5% | 1/10W |
| R404 | 1-216-815-11 | METAL CHIP | 330 | 5% | 1/10W |
| R405 | 1-216-837-11 | METAL CHIP | 22K | 5% | 1/10W |
| R406 | 1-216-811-11 | METAL CHIP | 150 | 5% | 1/10W |
| R407 | 1-216-811-11 | METAL CHIP | 150 | 5% | 1/10W |
| R408 | 1-216-821-11 | METAL CHIP | 1K | 5% | 1/10W |
| R409 | 1-216-833-11 | METAL CHIP | 10K | 5% | 1/10W |
| R410 | 1-216-811-11 | METAL CHIP | 150 | 5% | 1/10W |
| R411 | 1-216-841-11 | METAL CHIP | 47K | 5% | 1/10W |
| R412 | 1-216-811-11 | METAL CHIP | 150 | 5% | 1/10W |
| R413 | 1-216-825-11 | METAL CHIP | 2.2K | 5% | 1/10W |
| R414 | 1-216-825-11 | METAL CHIP | 2.2K | 5% | 1/10W |
| R415 | 1-216-825-11 | METAL CHIP | 2.2K | 5% | 1/10W |
| R416 | 1-216-811-11 | METAL CHIP | 150 | 5% | 1/10W |
| R417 | 1-216-811-11 | METAL CHIP | 150 | 5% | 1/10W |
| R418 | 1-216-811-11 | METAL CHIP | 150 | 5% | 1/10W |
| R419 | 1-216-811-11 | METAL CHIP | 150 | 5% | 1/10W |
| R421 | 1-216-864-11 | SHORT CHIP | 0 | | |
| R422 | 1-218-285-11 | METAL CHIP | 75 | 5% | 1/10W |
| R424 | 1-216-821-11 | METAL CHIP | 1K | 5% | 1/10W |
| R425 | 1-216-809-11 | METAL CHIP | 100 | 5% | 1/10W |
| R426 | 1-216-809-11 | METAL CHIP | 100 | 5% | 1/10W |
| R431 | 1-218-827-11 | METAL CHIP | 150 | 0.5% | 1/10W |
| R432 | 1-218-827-11 | METAL CHIP | 150 | 0.5% | 1/10W |
| R433 | 1-218-827-11 | METAL CHIP | 150 | 0.5% | 1/10W |
| R434 | 1-218-827-11 | METAL CHIP | 150 | 0.5% | 1/10W |
| R435 | 1-218-827-11 | METAL CHIP | 150 | 0.5% | 1/10W |
| R479 | 1-216-829-11 | METAL CHIP | 4.7K | 5% | 1/10W |
| R480 | 1-216-841-11 | METAL CHIP | 47K | 5% | 1/10W |
| R481 | 1-216-841-11 | METAL CHIP | 47K | 5% | 1/10W |
| R485 | 1-216-829-11 | METAL CHIP | 4.7K | 5% | 1/10W |
| R486 | 1-216-829-11 | METAL CHIP | 4.7K | 5% | 1/10W |
| R489 | 1-216-829-11 | METAL CHIP | 4.7K | 5% | 1/10W |
| R490 | 1-216-841-11 | METAL CHIP | 47K | 5% | 1/10W |
| R491 | 1-216-841-11 | METAL CHIP | 47K | 5% | 1/10W |

| Ref. No. | Part No. | Description | | | Remark |
|---|---|---|---|---|---|
| R494 | 1-216-829-11 | METAL CHIP | 4.7K | 5% | 1/10W |
| R495 | 1-216-833-11 | METAL CHIP | 10K | 5% | 1/10W |
| R496 | 1-216-841-11 | METAL CHIP | 47K | 5% | 1/10W |
| R497 | 1-216-841-11 | METAL CHIP | 47K | 5% | 1/10W |
| R500 | 1-216-821-11 | METAL CHIP | 1K | 5% | 1/10W |
| R503 | 1-216-829-11 | METAL CHIP | 4.7K | 5% | 1/10W |
| R504 | 1-216-829-11 | METAL CHIP | 4.7K | 5% | 1/10W |
| R505 | 1-216-833-11 | METAL CHIP | 10K | 5% | 1/10W |
| R506 | 1-216-829-11 | METAL CHIP | 4.7K | 5% | 1/10W |
| R507 | 1-216-841-11 | METAL CHIP | 47K | 5% | 1/10W |
| R508 | 1-216-841-11 | METAL CHIP | 47K | 5% | 1/10W |
| R509 | 1-216-821-11 | METAL CHIP | 1K | 5% | 1/10W |
| R513 | 1-216-864-11 | SHORT CHIP | 0 | | |
| R514 | 1-216-864-11 | SHORT CHIP | 0 | | |
| R515 | 1-216-864-11 | SHORT CHIP | 0 | | |
| R516 | 1-216-864-11 | SHORT CHIP | 0 | | |
| R523 | 1-216-864-11 | SHORT CHIP | 0 | | |
| R527 | 1-216-841-11 | METAL CHIP | 47K | 5% | 1/10W |
| R528 | 1-216-841-11 | METAL CHIP | 47K | 5% | 1/10W |
| R533 | 1-216-827-11 | METAL CHIP | 3.3K | 5% | 1/10W |
| R536 | 1-216-833-11 | METAL CHIP | 10K | 5% | 1/10W |
| R538 | 1-216-827-11 | METAL CHIP | 3.3K | 5% | 1/10W |
| R539 | 1-216-841-11 | METAL CHIP | 47K | 5% | 1/10W |
| R540 | 1-216-841-11 | METAL CHIP | 47K | 5% | 1/10W |
| R541 | 1-216-864-11 | SHORT CHIP | 0 | | |
| R543 | 1-216-821-11 | METAL CHIP | 1K | 5% | 1/10W |
| R546 | 1-216-864-11 | SHORT CHIP | 0 | | |
| R548 | 1-216-864-11 | SHORT CHIP | 0 | | |
| R550 | 1-216-833-11 | METAL CHIP | 10K | 5% | 1/10W |
| R551 | 1-216-829-11 | METAL CHIP | 4.7K | 5% | 1/10W |
| R552 | 1-216-841-11 | METAL CHIP | 47K | 5% | 1/10W |
| R553 | 1-216-841-11 | METAL CHIP | 47K | 5% | 1/10W |
| R556 | 1-216-821-11 | METAL CHIP | 1K | 5% | 1/10W |
| R557 | 1-216-809-11 | METAL CHIP | 100 | 5% | 1/10W |
| R558 | 1-216-809-11 | METAL CHIP | 100 | 5% | 1/10W |
| R559 | 1-216-829-11 | METAL CHIP | 4.7K | 5% | 1/10W |
| R561 | 1-216-829-11 | METAL CHIP | 4.7K | 5% | 1/10W |
| R563 | 1-216-864-11 | SHORT CHIP | 0 | | |
| R564 | 1-216-829-11 | METAL CHIP | 4.7K | 5% | 1/10W |
| R566 | 1-216-841-11 | METAL CHIP | 47K | 5% | 1/10W |
| R567 | 1-216-841-11 | METAL CHIP | 47K | 5% | 1/10W |
| R570 | 1-216-829-11 | METAL CHIP | 4.7K | 5% | 1/10W |
| R572 | 1-216-829-11 | METAL CHIP | 4.7K | 5% | 1/10W |
| R574 | 1-216-864-11 | SHORT CHIP | 0 | | |
| R575 | 1-216-833-11 | METAL CHIP | 10K | 5% | 1/10W |
| R577 | 1-216-864-11 | SHORT CHIP | 0 | | |
| R579 | 1-216-821-11 | METAL CHIP | 1K | 5% | 1/10W |
| R582 | 1-216-833-11 | METAL CHIP | 10K | 5% | 1/10W |
| R584 | 1-216-821-11 | METAL CHIP | 1K | 5% | 1/10W |
| R585 | 1-216-864-11 | SHORT CHIP | 0 | | |
| R598 | 1-216-841-11 | METAL CHIP | 47K | 5% | 1/10W |
| R599 | 1-216-841-11 | METAL CHIP | 47K | 5% | 1/10W |
| R600 | 1-216-845-11 | METAL CHIP | 100K | 5% | 1/10W |
| R601 | 1-216-845-11 | METAL CHIP | 100K | 5% | 1/10W |
| R602 | 1-216-845-11 | METAL CHIP | 100K | 5% | 1/10W |
| R603 | 1-216-845-11 | METAL CHIP | 100K | 5% | 1/10W |
| R609 | 1-216-864-11 | SHORT CHIP | 0 | | |
| R610 | 1-216-864-11 | SHORT CHIP | 0 | | |
| R611 | 1-216-864-11 | SHORT CHIP | 0 | | |
| R612 | 1-216-864-11 | SHORT CHIP | 0 | | |

| Ref. No. | Part No. | Description | | | Remark |
|---|---|---|---|---|---|
| R620 | 1-216-821-11 | METAL CHIP | 1K | 5% | 1/10W |
| R622 | 1-216-864-11 | SHORT CHIP | 0 | | |
| R623 | 1-216-864-11 | SHORT CHIP | 0 | | |
| ⚠ R624 | 1-215-865-11 | METAL OXIDE | 220 | 5% | 1W F |
| R625 | 1-216-864-11 | SHORT CHIP | 0 | | |
| R626 | 1-216-864-11 | SHORT CHIP | 0 | | |
| ********** | | | | | |
| | A-1458-490-A | JACK BOARD, COMPLETE (DZ860W/DZ870W:EXCEPT E32,MX) | | | |
| | A-1459-202-A | JACK BOARD, COMPLETE (DZ870W:E32,MX) | | | |
| | A-1459-218-A | JACK BOARD, COMPLETE (DZ870KW) | | | |
| | A-1551-093-A | JACK BOARD, COMPLETE (DZ870M) | | | |
| | | ********** | | | |
| | | < CAPACITOR > | | | |
| C121 | 1-165-908-11 | CERAMIC CHIP | 1uF | 10% | 10V |
| C122 | 1-165-908-11 | CERAMIC CHIP | 1uF | 10% | 10V |
| C127 | 1-107-826-11 | CERAMIC CHIP | 0.1uF | 10% | 16V |
| C132 | 1-104-658-11 | ELECT | 100uF | 20% | 10V |
| C133 | 1-162-915-11 | CERAMIC CHIP | 10PF | 0.5PF | 50V (DZ860W/DZ870W) |
| C133 | 1-162-927-11 | CERAMIC CHIP | 100PF | 5% | 50V (DZ870KW/DZ870M) |
| C134 | 1-164-315-11 | CERAMIC CHIP | 470PF | 5% | 50V |
| C135 | 1-124-589-11 | ELECT | 47uF | 20% | 16V |
| C136 | 1-107-826-11 | CERAMIC CHIP | 0.1uF | 10% | 16V |
| C137 | 1-124-584-00 | ELECT | 100uF | 20% | 10V |
| C138 | 1-126-157-11 | ELECT | 10uF | 20% | 16V |
| C139 | 1-107-826-11 | CERAMIC CHIP | 0.1uF | 10% | 16V |
| C142 | 1-162-964-11 | CERAMIC CHIP | 0.001uF | 10% | 50V |
| C143 | 1-162-964-11 | CERAMIC CHIP | 0.001uF | 10% | 50V |
| C144 | 1-126-157-11 | ELECT | 10uF | 20% | 16V |
| C145 | 1-162-964-11 | CERAMIC CHIP | 0.001uF | 10% | 50V |
| C147 | 1-162-915-11 | CERAMIC CHIP | 10PF | 0.5PF | 50V (DZ860W/DZ870W) |
| C147 | 1-162-927-11 | CERAMIC CHIP | 100PF | 5% | 50V (DZ870KW/DZ870M) |
| C148 | 1-164-315-11 | CERAMIC CHIP | 470PF | 5% | 50V |
| C152 | 1-162-964-11 | CERAMIC CHIP | 0.001uF | 10% | 50V |
| C156 | 1-162-964-11 | CERAMIC CHIP | 0.001uF | 10% | 50V (DZ870KW/DZ870M) |
| C157 | 1-124-584-00 | ELECT | 100uF | 20% | 10V (DZ870KW/DZ870M) |
| C158 | 1-107-826-11 | CERAMIC CHIP | 0.1uF | 10% | 16V (DZ870KW/DZ870M) |
| C159 | 1-107-826-11 | CERAMIC CHIP | 0.1uF | 10% | 16V (DZ870KW/DZ870M) |
| C160 | 1-162-927-11 | CERAMIC CHIP | 100PF | 5% | 50V (DZ870KW/DZ870M) |
| C161 | 1-164-315-11 | CERAMIC CHIP | 470PF | 5% | 50V (DZ870KW/DZ870M) |
| C162 | 1-162-927-11 | CERAMIC CHIP | 100PF | 5% | 50V (DZ870KW/DZ870M) |
| C164 | 1-126-157-11 | ELECT | 10uF | 20% | 16V (DZ870KW/DZ870M) |
| C165 | 1-162-970-11 | CERAMIC CHIP | 0.01uF | 10% | 25V (DZ860W/DZ870W) |
| C166 | 1-162-970-11 | CERAMIC CHIP | 0.01uF | 10% | 25V (DZ860W/DZ870W) |
| C168 | 1-162-970-11 | CERAMIC CHIP | 0.01uF | 10% | 25V |
| C169 | 1-162-970-11 | CERAMIC CHIP | 0.01uF | 10% | 25V |

## JACK

| Ref. No. | Part No. | Description | Remark |
|---|---|---|---|
| | | < CONNECTOR > | |
| CN102 | 1-779-277-11 | CONNECTOR, FFC (LIF(NON-ZIF)) 9P | |
| CN103 | 1-779-287-11 | CONNECTOR, FFC (LIF(NON-ZIF)) 19P | |
| CN104 | 1-819-866-11 | CONNECTOR, USB (A) (USB) | |
| CN105 | 1-564-721-11 | PIN, CONNECTOR (SMALL TYPE) 5P | |
| | | < DIODE > | |
| D107 | 6-501-817-01 | DIODE MA2J1110GLS0 | |
| D108 | 6-501-579-01 | DIODE MC2837 | |
| D109 | 6-501-579-01 | DIODE MC2837 | |
| | | < FERRITE BEAD > | |
| FB102 | 1-500-236-22 | BEAD, FERRITE (CHIP) (1608) | (EXCEPT DZ870KW/DZ870W:E32,MX) |
| FB103 | 1-500-236-22 | BEAD, FERRITE (CHIP) (1608) | (EXCEPT DZ870KW/DZ870W:E32,MX) |
| FB104 | 1-500-236-22 | BEAD, FERRITE (CHIP) (1608) | (EXCEPT DZ870KW/DZ870W:E32,MX) |
| FB105 | 1-500-236-22 | BEAD, FERRITE (CHIP) (1608) | (DZ860W/DZ870W:EXCEPT E32,MX) |
| FB106 | 1-500-236-22 | BEAD, FERRITE (CHIP) (1608) | (DZ860W/DZ870W:EXCEPT E32,MX) |
| | | < IC > | |
| IC102 | 6-705-312-01 | IC S-T111B33MC-OGSTFG | |
| IC103 | 8-759-100-96 | IC uPC4558G2 | |
| IC104 | 8-759-100-96 | IC uPC4558G2 (DZ870KW/DZ870M) | |
| | | < JACK > | |
| J100 | 1-819-878-41 | JACK (AUDIO IN/MIC1/A.CAL MIC) | (DZ870KW/DZ870M) |
| J100 | 1-819-878-51 | JACK (AUDIO IN/A.CAL MIC) (DZ860W/DZ870W) | |
| J101 | 1-819-878-41 | JACK (MIC2) (DZ870KW/DZ870M) | |
| J101 | 1-819-878-51 | JACK (PHONES) (DZ860W/DZ870W) | |
| | | < JUMPER RESISTOR > | |
| JR101 | 1-216-864-11 | SHORT CHIP 0 | |
| JR102 | 1-216-864-11 | SHORT CHIP 0 | |
| JR103 | 1-216-864-11 | SHORT CHIP 0 | |
| | | < TRANSISTOR > | |
| Q101 | 8-729-038-28 | TRANSISTOR RT1N441C-TP-1 | |
| Q102 | 8-729-038-28 | TRANSISTOR RT1N441C-TP-1 | |
| Q103 | 8-729-038-11 | TRANSISTOR RT1P140C-TP-1 | |
| Q104 | 8-729-027-23 | TRANSISTOR DTA114EKA-T146 | |
| Q105 | 8-729-027-23 | TRANSISTOR DTA114EKA-T146 | |
| Q106 | 6-550-889-01 | TRANSISTOR 2SC5938-T112-1B | (DZ860W/DZ870W) |
| Q107 | 6-550-889-01 | TRANSISTOR 2SC5938-T112-1B | (DZ860W/DZ870W) |
| Q108 | 6-550-889-01 | TRANSISTOR 2SC5938-T112-1B | (DZ860W/DZ870W) |
| Q109 | 6-550-889-01 | TRANSISTOR 2SC5938-T112-1B | (DZ860W/DZ870W) |
| | | < RESISTOR > | |
| R109 | 1-216-827-11 | METAL CHIP 3.3K 5% 1/10W | |
| R110 | 1-216-833-11 | METAL CHIP 10K 5% 1/10W | |
| R111 | 1-216-809-11 | METAL CHIP 100 5% 1/10W | |
| R112 | 1-216-809-11 | METAL CHIP 100 5% 1/10W | |
| R113 | 1-216-815-11 | METAL CHIP 330 5% 1/10W | |
| R114 | 1-216-815-11 | METAL CHIP 330 5% 1/10W | |
| R115 | 1-216-827-11 | METAL CHIP 3.3K 5% 1/10W | |
| R121 | 1-216-825-11 | METAL CHIP 2.2K 5% 1/10W | |
| R122 | 1-216-825-11 | METAL CHIP 2.2K 5% 1/10W | |
| R123 | 1-216-821-11 | METAL CHIP 1K 5% 1/10W | |
| R126 | 1-216-825-11 | METAL CHIP 2.2K 5% 1/10W | |
| R128 | 1-216-827-11 | METAL CHIP 3.3K 5% 1/10W | |
| R129 | 1-216-801-11 | METAL CHIP 22 5% 1/10W | (DZ870KW/DZ870M) |
| R129 | 1-216-811-11 | METAL CHIP 150 5% 1/10W | (DZ860W/DZ870W) |
| R130 | 1-216-821-11 | METAL CHIP 1K 5% 1/10W | |
| R131 | 1-216-821-11 | METAL CHIP 1K 5% 1/10W | |
| R132 | 1-216-809-11 | METAL CHIP 100 5% 1/10W | |
| R133 | 1-216-819-11 | METAL CHIP 680 5% 1/10W | |
| R134 | 1-216-837-11 | METAL CHIP 22K 5% 1/10W | (DZ870KW/DZ870M) |
| R134 | 1-216-846-11 | METAL CHIP 120K 5% 1/10W | (DZ860W/DZ870W) |
| R135 | 1-216-833-11 | METAL CHIP 10K 5% 1/10W | |
| R136 | 1-216-825-11 | METAL CHIP 2.2K 5% 1/10W | |
| R137 | 1-216-837-11 | METAL CHIP 22K 5% 1/10W | |
| R138 | 1-216-845-11 | METAL CHIP 100K 5% 1/10W | |
| R139 | 1-216-825-11 | METAL CHIP 2.2K 5% 1/10W | |
| R140 | 1-216-805-11 | METAL CHIP 47 5% 1/10W | |
| R141 | 1-216-827-11 | METAL CHIP 3.3K 5% 1/10W | |
| R143 | 1-216-817-11 | METAL CHIP 470 5% 1/10W | |
| R144 | 1-216-829-11 | METAL CHIP 4.7K 5% 1/10W | |
| R145 | 1-216-845-11 | METAL CHIP 100K 5% 1/10W | |
| R146 | 1-216-817-11 | METAL CHIP 470 5% 1/10W | |
| R147 | 1-216-845-11 | METAL CHIP 100K 5% 1/10W | |
| R148 | 1-216-837-11 | METAL CHIP 22K 5% 1/10W | |
| R149 | 1-216-821-11 | METAL CHIP 1K 5% 1/10W | |
| R150 | 1-216-821-11 | METAL CHIP 1K 5% 1/10W | |
| R153 | 1-216-864-11 | SHORT CHIP 0 (DZ870KW/DZ870M) | |
| R155 | 1-216-864-11 | SHORT CHIP 0 (DZ870KW/DZ870M) | |
| R156 | 1-216-864-11 | SHORT CHIP 0 (DZ870KW/DZ870M) | |
| R157 | 1-216-829-11 | METAL CHIP 4.7K 5% 1/10W | (DZ870KW/DZ870M) |
| R158 | 1-216-829-11 | METAL CHIP 4.7K 5% 1/10W | (DZ870KW/DZ870M) |
| R159 | 1-216-845-11 | METAL CHIP 100K 5% 1/10W | (DZ870KW/DZ870M) |
| R160 | 1-216-837-11 | METAL CHIP 22K 5% 1/10W | (DZ870KW/DZ870M) |
| R161 | 1-216-817-11 | METAL CHIP 470 5% 1/10W | (DZ870KW/DZ870M) |
| R162 | 1-216-864-11 | SHORT CHIP 0 (DZ860W/DZ870W) | |
| R163 | 1-216-821-11 | METAL CHIP 1K 5% 1/10W | (DZ870KW/DZ870M) |
| R164 | 1-216-837-11 | METAL CHIP 22K 5% 1/10W | (DZ870KW/DZ870M) |
| R165 | 1-216-829-11 | METAL CHIP 4.7K 5% 1/10W | (DZ860W/DZ870W) |
| R166 | 1-216-829-11 | METAL CHIP 4.7K 5% 1/10W | (DZ860W/DZ870W) |
| R167 | 1-216-801-11 | METAL CHIP 22 5% 1/10W | (DZ860W/DZ870W) |
| R168 | 1-216-801-11 | METAL CHIP 22 5% 1/10W | (DZ860W/DZ870W) |
| R169 | 1-216-829-11 | METAL CHIP 4.7K 5% 1/10W | (DZ860W/DZ870W) |

| Ref. No. | Part No. | Description | | | Remark |
|---|---|---|---|---|---|
| R170 | 1-216-829-11 | METAL CHIP | 4.7K | 5% | 1/10W (DZ860W/DZ870W) |
| R171 | 1-216-829-11 | METAL CHIP | 4.7K | 5% | 1/10W (DZ860W/DZ870W) |
| R172 | 1-216-829-11 | METAL CHIP | 4.7K | 5% | 1/10W (DZ860W/DZ870W) |
| R173 | 1-216-805-11 | METAL CHIP | 47 | 5% | 1/10W (DZ860W/DZ870W) |
| R174 | 1-216-805-11 | METAL CHIP | 47 | 5% | 1/10W (DZ860W/DZ870W) |
| R179 | 1-216-864-11 | SHORT CHIP | 0 (DZ870KW/DZ870W:E32,MX) | | |
| R180 | 1-216-864-11 | SHORT CHIP | 0 (DZ870KW/DZ870W:E32,MX) | | |
| R181 | 1-216-864-11 | SHORT CHIP | 0 (DZ870KW/DZ870W:E32,MX) | | |
| R182 | 1-216-864-11 | SHORT CHIP | 0 (DZ870W:E32,MX) | | |
| R183 | 1-216-864-11 | SHORT CHIP | 0 (DZ870W:E32,MX) | | |
| R184 | 1-216-821-11 | METAL CHIP | 1K | 5% | 1/10W |
| R186 | 1-216-821-11 | METAL CHIP | 1K | 5% | 1/10W |
| R187 | 1-216-821-11 | METAL CHIP | 1K | 5% | 1/10W |
| | | < SWITCH > | | | |
| S100 | 1-762-875-21 | SWITCH, KEYBOARD (⏏) | | | |
| S101 | 1-762-875-21 | SWITCH, KEYBOARD (▷) | | | |
| S102 | 1-762-875-21 | SWITCH, KEYBOARD (▶▶I) | | | |
| S103 | 1-762-875-21 | SWITCH, KEYBOARD (■) | | | |
| S104 | 1-762-875-21 | SWITCH, KEYBOARD (❚❚) | | | |
| S105 | 1-762-875-21 | SWITCH, KEYBOARD (I◀◀) | | | |
| S106 | 1-762-875-21 | SWITCH, KEYBOARD (FUNCTION) | | | |
| S107 | 1-480-136-11 | ENCODER, ROTARY (12 TYPE) (VOLUME) | | | |
| ********** | | | | | |
| 🔒 | A-1458-471-A | MAIN BOARD, COMPLETE (for SERVICE) | | | (DZ870M) |
| 🔒 | A-1458-495-A | MAIN BOARD, COMPLETE (for SERVICE) | | | (DZ860W) |
| 🔒 | A-1459-179-A | MAIN BOARD, COMPLETE (for SERVICE) | | | (DZ870W:E3,E15,EA) |
| 🔒 | A-1459-194-A | MAIN BOARD, COMPLETE (for SERVICE) | | | (DZ870W:TW) |
| 🔒 | A-1459-205-A | MAIN BOARD, COMPLETE (for SERVICE) | | | (DZ870W:E32) |
| 🔒 | A-1459-222-A | MAIN BOARD, COMPLETE (for SERVICE) | | | (DZ870KW) |
| 🔒 | A-1539-245-A | MAIN BOARD, COMPLETE (for SERVICE) | | | (DZ870W:AUS) |
| 🔒 | A-1539-246-A | MAIN BOARD, COMPLETE (for SERVICE) | | | (DZ870W:KR) |
| 🔒 | A-1539-247-A | MAIN BOARD, COMPLETE (for SERVICE) | | | (DZ870W:MX) |
| | | ********** | | | |
| | 4-231-099-41 | SHEET, RADIATION | | | |
| | | < CAPACITOR > | | | |
| C220 | 1-128-995-21 | ELECT CHIP | 100uF | 20% | 10V |
| C221 | 1-107-826-11 | CERAMIC CHIP | 0.1uF | 10% | 16V |
| C222 | 1-107-826-11 | CERAMIC CHIP | 0.1uF | 10% | 16V |
| C223 | 1-126-206-11 | ELECT CHIP | 100uF | 20% | 6.3V |
| C227 | 1-162-964-11 | CERAMIC CHIP | 0.001uF | 10% | 50V |
| C229 | 1-165-908-11 | CERAMIC CHIP | 1uF | 10% | 10V |
| C230 | 1-165-908-11 | CERAMIC CHIP | 1uF | 10% | 10V |
| C231 | 1-165-908-11 | CERAMIC CHIP | 1uF | 10% | 10V |
| C232 | 1-165-908-11 | CERAMIC CHIP | 1uF | 10% | 10V |
| C237 | 1-107-826-11 | CERAMIC CHIP | 0.1uF | 10% | 16V |
| C238 | 1-126-965-11 | ELECT | 22uF | 20% | 50V |

| Ref. No. | Part No. | Description | | | Remark |
|---|---|---|---|---|---|
| C239 | 1-126-947-11 | ELECT | 47uF | 20% | 35V |
| C240 | 1-107-826-11 | CERAMIC CHIP | 0.1uF | 10% | 16V |
| C241 | 1-107-826-11 | CERAMIC CHIP | 0.1uF | 10% | 16V |
| C312 | 1-107-826-11 | CERAMIC CHIP | 0.1uF | 10% | 16V |
| C313 | 1-126-933-11 | ELECT | 100uF | 20% | 16V |
| C314 | 1-107-826-11 | CERAMIC CHIP | 0.1uF | 10% | 16V |
| C315 | 1-126-933-11 | ELECT | 100uF | 20% | 16V |
| C317 | 1-107-826-11 | CERAMIC CHIP | 0.1uF | 10% | 16V |
| C501 | 1-107-826-11 | CERAMIC CHIP | 0.1uF | 10% | 16V |
| C502 | 1-107-826-11 | CERAMIC CHIP | 0.1uF | 10% | 16V |
| C503 | 1-107-826-11 | CERAMIC CHIP | 0.1uF | 10% | 16V |
| C504 | 1-162-970-11 | CERAMIC CHIP | 0.01uF | 10% | 25V |
| C505 | 1-162-970-11 | CERAMIC CHIP | 0.01uF | 10% | 25V |
| C507 | 1-107-826-11 | CERAMIC CHIP | 0.1uF | 10% | 16V |
| C508 | 1-107-826-11 | CERAMIC CHIP | 0.1uF | 10% | 16V |
| C509 | 1-165-908-11 | CERAMIC CHIP | 1uF | 10% | 10V |
| C510 | 1-107-826-11 | CERAMIC CHIP | 0.1uF | 10% | 16V |
| C511 | 1-107-826-11 | CERAMIC CHIP | 0.1uF | 10% | 16V |
| C512 | 1-107-826-11 | CERAMIC CHIP | 0.1uF | 10% | 16V |
| C515 | 1-107-826-11 | CERAMIC CHIP | 0.1uF | 10% | 16V |
| C516 | 1-165-908-11 | CERAMIC CHIP | 1uF | 10% | 10V |
| C517 | 1-107-826-11 | CERAMIC CHIP | 0.1uF | 10% | 16V |
| C518 | 1-107-826-11 | CERAMIC CHIP | 0.1uF | 10% | 16V |
| C520 | 1-127-715-11 | CERAMIC CHIP | 0.22uF | 10% | 16V |
| C521 | 1-162-970-11 | CERAMIC CHIP | 0.01uF | 10% | 25V |
| C522 | 1-127-715-11 | CERAMIC CHIP | 0.22uF | 10% | 16V |
| C523 | 1-107-826-11 | CERAMIC CHIP | 0.1uF | 10% | 16V |
| C524 | 1-104-658-11 | ELECT | 100uF | 20% | 10V |
| C525 | 1-107-826-11 | CERAMIC CHIP | 0.1uF | 10% | 16V |
| C526 | 1-104-658-11 | ELECT | 100uF | 20% | 10V |
| C527 | 1-126-916-11 | ELECT | 1000uF | 20% | 6.3V |
| C528 | 1-126-916-11 | ELECT | 1000uF | 20% | 6.3V |
| C529 | 1-162-970-11 | CERAMIC CHIP | 0.01uF | 10% | 25V |
| C530 | 1-126-965-11 | ELECT | 22uF | 20% | 50V |
| C531 | 1-107-826-11 | CERAMIC CHIP | 0.1uF | 10% | 16V |
| C532 | 1-107-826-11 | CERAMIC CHIP | 0.1uF | 10% | 16V |
| C533 | 1-107-826-11 | CERAMIC CHIP | 0.1uF | 10% | 16V |
| C538 | 1-162-964-11 | CERAMIC CHIP | 0.001uF | 10% | 50V |
| C539 | 1-126-933-11 | ELECT | 100uF | 20% | 16V |
| C571 | 1-165-908-11 | CERAMIC CHIP | 1uF | 10% | 10V |
| C572 | 1-107-826-11 | CERAMIC CHIP | 0.1uF | 10% | 16V |
| C573 | 1-126-965-11 | ELECT | 22uF | 20% | 50V |
| C574 | 1-162-964-11 | CERAMIC CHIP | 0.001uF | 10% | 50V |
| C581 | 1-162-970-11 | CERAMIC CHIP | 0.01uF | 10% | 25V |
| C582 | 1-107-826-11 | CERAMIC CHIP | 0.1uF | 10% | 16V |
| C583 | 1-104-658-11 | ELECT | 100uF | 20% | 10V |
| C584 | 1-126-933-11 | ELECT | 100uF | 20% | 16V |
| C591 | 1-162-970-11 | CERAMIC CHIP | 0.01uF | 10% | 25V |
| C592 | 1-162-970-11 | CERAMIC CHIP | 0.01uF | 10% | 25V |
| C593 | 1-104-658-11 | ELECT | 100uF | 20% | 10V |
| C594 | 1-126-933-11 | ELECT | 100uF | 20% | 16V |
| C705 | 1-126-964-11 | ELECT | 10uF | 20% | 50V |
| C706 | 1-126-964-11 | ELECT | 10uF | 20% | 50V |
| C707 | 1-107-826-11 | CERAMIC CHIP | 0.1uF | 10% | 16V |
| C708 | 1-107-826-11 | CERAMIC CHIP | 0.1uF | 10% | 16V |
| C709 | 1-126-923-11 | ELECT | 220uF | 20% | 10V |
| C710 | 1-110-563-11 | CERAMIC CHIP | 0.068uF | 10% | 16V |
| C711 | 1-107-826-11 | CERAMIC CHIP | 0.1uF | 10% | 16V |
| C716 | 1-162-970-11 | CERAMIC CHIP | 0.01uF | 10% | 25V |
| C717 | 1-126-964-11 | ELECT | 10uF | 20% | 50V |

## MAIN

| Ref. No. | Part No. | Description | | | Remark |
|---|---|---|---|---|---|
| C718 | 1-107-826-11 | CERAMIC CHIP | 0.1uF | 10% | 16V |
| C719 | 1-107-826-11 | CERAMIC CHIP | 0.1uF | 10% | 16V |
| C720 | 1-126-923-11 | ELECT | 220uF | 20% | 10V |
| C721 | 1-162-970-11 | CERAMIC CHIP | 0.01uF | 10% | 25V |
| C722 | 1-107-826-11 | CERAMIC CHIP | 0.1uF | 10% | 16V |
| C723 | 1-107-826-11 | CERAMIC CHIP | 0.1uF | 10% | 16V |
| C724 | 1-162-917-11 | CERAMIC CHIP | 15PF | 5% | 50V |
| C725 | 1-162-917-11 | CERAMIC CHIP | 15PF | 5% | 50V |
| C727 | 1-107-826-11 | CERAMIC CHIP | 0.1uF | 10% | 16V |
| C751 | 1-162-970-11 | CERAMIC CHIP | 0.01uF | 10% | 25V |
| C752 | 1-107-826-11 | CERAMIC CHIP | 0.1uF | 10% | 16V |
| C774 | 1-107-826-11 | CERAMIC CHIP | 0.1uF | 10% | 16V |
| C775 | 1-126-964-11 | ELECT | 10uF | 20% | 50V |
| C1101 | 1-162-970-11 | CERAMIC CHIP | 0.01uF | 10% | 25V |
| C1102 | 1-165-908-11 | CERAMIC CHIP | 1uF | 10% | 10V |
| C1105 | 1-128-994-21 | ELECT CHIP | 47uF | 20% | 10V |
| C1106 | 1-162-970-11 | CERAMIC CHIP | 0.01uF | 10% | 25V |
| C1108 | 1-107-826-11 | CERAMIC CHIP | 0.1uF | 10% | 16V |
| C1109 | 1-107-826-11 | CERAMIC CHIP | 0.1uF | 10% | 16V |
| C1110 | 1-107-826-11 | CERAMIC CHIP | 0.1uF | 10% | 16V |
| C1111 | 1-126-206-11 | ELECT CHIP | 100uF | 20% | 6.3V |
| C1112 | 1-128-994-21 | ELECT CHIP | 47uF | 20% | 10V |
| C1113 | 1-162-970-11 | CERAMIC CHIP | 0.01uF | 10% | 25V |
| C1114 | 1-107-826-11 | CERAMIC CHIP | 0.1uF | 10% | 16V |
| C1115 | 1-107-826-11 | CERAMIC CHIP | 0.1uF | 10% | 16V |
| C1116 | 1-107-826-11 | CERAMIC CHIP | 0.1uF | 10% | 16V |
| C1117 | 1-128-994-21 | ELECT CHIP | 47uF | 20% | 10V |
| C1118 | 1-128-994-21 | ELECT CHIP | 47uF | 20% | 10V |
| C1119 | 1-128-994-21 | ELECT CHIP | 47uF | 20% | 10V |
| C1120 | 1-165-908-11 | CERAMIC CHIP | 1uF | 10% | 10V |
| C1121 | 1-165-908-11 | CERAMIC CHIP | 1uF | 10% | 10V |
| C1122 | 1-165-908-11 | CERAMIC CHIP | 1uF | 10% | 10V |
| C1123 | 1-165-908-11 | CERAMIC CHIP | 1uF | 10% | 10V |
| C1124 | 1-165-908-11 | CERAMIC CHIP | 1uF | 10% | 10V |
| C1125 | 1-107-826-11 | CERAMIC CHIP | 0.1uF | 10% | 16V |
| C1126 | 1-107-826-11 | CERAMIC CHIP | 0.1uF | 10% | 16V |
| C1127 | 1-162-970-11 | CERAMIC CHIP | 0.01uF | 10% | 25V |
| C1129 | 1-165-989-11 | CERAMIC CHIP | 10uF | 10% | 6.3V |
| C1130 | 1-107-826-11 | CERAMIC CHIP | 0.1uF | 10% | 16V |
| C1132 | 1-107-826-11 | CERAMIC CHIP | 0.1uF | 10% | 16V |
| C1133 | 1-107-826-11 | CERAMIC CHIP | 0.1uF | 10% | 16V |
| C1135 | 1-164-677-11 | CERAMIC CHIP | 0.033uF | 10% | 16V |
| C1136 | 1-162-970-11 | CERAMIC CHIP | 0.01uF | 10% | 25V |
| C1137 | 1-107-826-11 | CERAMIC CHIP | 0.1uF | 10% | 16V |
| C1138 | 1-162-964-11 | CERAMIC CHIP | 0.001uF | 10% | 50V |
| C1139 | 1-162-919-11 | CERAMIC CHIP | 22PF | 5% | 50V |
| C1140 | 1-107-826-11 | CERAMIC CHIP | 0.1uF | 10% | 16V |
| C1144 | 1-162-970-11 | CERAMIC CHIP | 0.01uF | 10% | 25V |
| C1145 | 1-124-779-00 | ELECT CHIP | 10uF | 20% | 16V |
| C1146 | 1-107-826-11 | CERAMIC CHIP | 0.1uF | 10% | 16V |
| C1147 | 1-165-176-11 | CERAMIC CHIP | 0.047uF | 10% | 16V |
| C1148 | 1-165-176-11 | CERAMIC CHIP | 0.047uF | 10% | 16V |
| C1149 | 1-107-826-11 | CERAMIC CHIP | 0.1uF | 10% | 16V |
| C1151 | 1-162-964-11 | CERAMIC CHIP | 0.001uF | 10% | 50V |
| C1152 | 1-162-916-11 | CERAMIC CHIP | 12PF | 5% | 50V |
| C1153 | 1-162-916-11 | CERAMIC CHIP | 12PF | 5% | 50V |
| C1154 | 1-107-826-11 | CERAMIC CHIP | 0.1uF | 10% | 16V |
| C1155 | 1-162-970-11 | CERAMIC CHIP | 0.01uF | 10% | 25V |
| C1156 | 1-162-970-11 | CERAMIC CHIP | 0.01uF | 10% | 25V |
| C1158 | 1-162-970-11 | CERAMIC CHIP | 0.01uF | 10% | 25V |

| Ref. No. | Part No. | Description | | | Remark |
|---|---|---|---|---|---|
| C1159 | 1-107-826-11 | CERAMIC CHIP | 0.1uF | 10% | 16V |
| C1160 | 1-162-970-11 | CERAMIC CHIP | 0.01uF | 10% | 25V |
| C1161 | 1-162-970-11 | CERAMIC CHIP | 0.01uF | 10% | 25V |
| C1162 | 1-162-970-11 | CERAMIC CHIP | 0.01uF | 10% | 25V |
| C1163 | 1-162-970-11 | CERAMIC CHIP | 0.01uF | 10% | 25V |
| C1164 | 1-162-970-11 | CERAMIC CHIP | 0.01uF | 10% | 25V |
| C1165 | 1-107-826-11 | CERAMIC CHIP | 0.1uF | 10% | 16V |
| C1169 | 1-107-826-11 | CERAMIC CHIP | 0.1uF | 10% | 16V |
| C1170 | 1-162-965-11 | CERAMIC CHIP | 0.0015uF | 10% | 50V |
| C1171 | 1-107-826-11 | CERAMIC CHIP | 0.1uF | 10% | 16V |
| C1172 | 1-107-826-11 | CERAMIC CHIP | 0.1uF | 10% | 16V |
| C1174 | 1-162-970-11 | CERAMIC CHIP | 0.01uF | 10% | 25V |
| C1175 | 1-162-970-11 | CERAMIC CHIP | 0.01uF | 10% | 25V |
| C1176 | 1-162-970-11 | CERAMIC CHIP | 0.01uF | 10% | 25V |
| C1177 | 1-126-947-11 | ELECT | 47uF | 20% | 35V |
| C1179 | 1-107-826-11 | CERAMIC CHIP | 0.1uF | 10% | 16V |
| C1180 | 1-107-826-11 | CERAMIC CHIP | 0.1uF | 10% | 16V |
| C1181 | 1-107-826-11 | CERAMIC CHIP | 0.1uF | 10% | 16V |
| C1182 | 1-127-715-11 | CERAMIC CHIP | 0.22uF | 10% | 16V |
| C1183 | 1-128-934-11 | CERAMIC CHIP | 0.33uF | 20% | 10V |
| C1184 | 1-107-826-11 | CERAMIC CHIP | 0.1uF | 10% | 16V |
| C1186 | 1-127-715-11 | CERAMIC CHIP | 0.22uF | 10% | 16V |
| C1187 | 1-126-947-11 | ELECT | 47uF | 20% | 35V |
| C1190 | 1-104-658-11 | ELECT | 100uF | 20% | 10V |
| C1191 | 1-107-826-11 | CERAMIC CHIP | 0.1uF | 10% | 16V |
| C1192 | 1-107-826-11 | CERAMIC CHIP | 0.1uF | 10% | 16V |
| C1193 | 1-127-715-11 | CERAMIC CHIP | 0.22uF | 10% | 16V |
| C1195 | 1-127-715-11 | CERAMIC CHIP | 0.22uF | 10% | 16V |
| C1197 | 1-107-826-11 | CERAMIC CHIP | 0.1uF | 10% | 16V |
| C1198 | 1-165-908-11 | CERAMIC CHIP | 1uF | 10% | 10V |
| C1199 | 1-162-968-11 | CERAMIC CHIP | 0.0047uF | 10% | 50V |
| C1203 | 1-162-970-11 | CERAMIC CHIP | 0.01uF | 10% | 25V |
| C1205 | 1-164-230-11 | CERAMIC CHIP | 220PF | 5% | 50V |
| C1206 | 1-164-230-11 | CERAMIC CHIP | 220PF | 5% | 50V |
| C1208 | 1-162-970-11 | CERAMIC CHIP | 0.01uF | 10% | 25V |
| C1209 | 1-164-677-11 | CERAMIC CHIP | 0.033uF | 10% | 16V |
| C1210 | 1-162-970-11 | CERAMIC CHIP | 0.01uF | 10% | 25V |
| C1211 | 1-164-677-11 | CERAMIC CHIP | 0.033uF | 10% | 16V |
| C1212 | 1-162-970-11 | CERAMIC CHIP | 0.01uF | 10% | 25V |
| C1213 | 1-162-970-11 | CERAMIC CHIP | 0.01uF | 10% | 25V |
| C1214 | 1-162-964-11 | CERAMIC CHIP | 0.001uF | 10% | 50V |
| C1215 | 1-162-970-11 | CERAMIC CHIP | 0.01uF | 10% | 25V |
| C1217 | 1-126-947-11 | ELECT | 47uF | 20% | 35V |
| C1218 | 1-124-779-00 | ELECT CHIP | 10uF | 20% | 16V |
| C1219 | 1-162-970-11 | CERAMIC CHIP | 0.01uF | 10% | 25V |
| C1220 | 1-124-779-00 | ELECT CHIP | 10uF | 20% | 16V |
| C1221 | 1-107-826-11 | CERAMIC CHIP | 0.1uF | 10% | 16V |
| C1222 | 1-107-826-11 | CERAMIC CHIP | 0.1uF | 10% | 16V |
| C1223 | 1-107-826-11 | CERAMIC CHIP | 0.1uF | 10% | 16V |
| C1224 | 1-162-970-11 | CERAMIC CHIP | 0.01uF | 10% | 25V |
| C1225 | 1-162-964-11 | CERAMIC CHIP | 0.001uF | 10% | 50V |
| C1226 | 1-162-964-11 | CERAMIC CHIP | 0.001uF | 10% | 50V |
| C1233 | 1-162-968-11 | CERAMIC CHIP | 0.0047uF | 10% | 50V |
| C1725 | 1-162-970-11 | CERAMIC CHIP | 0.01uF | 10% | 25V |
| C1726 | 1-162-970-11 | CERAMIC CHIP | 0.01uF | 10% | 25V |
| C1727 | 1-107-826-11 | CERAMIC CHIP | 0.1uF | 10% | 16V |
| C1728 | 1-128-994-21 | ELECT CHIP | 47uF | 20% | 10V |
| C1729 | 1-127-715-11 | CERAMIC CHIP | 0.22uF | 10% | 16V |
| C1730 | 1-127-715-11 | CERAMIC CHIP | 0.22uF | 10% | 16V |
| C1731 | 1-127-715-11 | CERAMIC CHIP | 0.22uF | 10% | 16V |

| Ref. No. | Part No. | Description | | | Remark |
|---|---|---|---|---|---|
| C1732 | 1-162-970-11 | CERAMIC CHIP | 0.01uF | 10% | 25V |
| C1733 | 1-127-715-11 | CERAMIC CHIP | 0.22uF | 10% | 16V |
| C1734 | 1-165-908-11 | CERAMIC CHIP | 1uF | 10% | 10V |
| C2100 | 1-162-970-11 | CERAMIC CHIP | 0.01uF | 10% | 25V |
| C2101 | 1-107-826-11 | CERAMIC CHIP | 0.1uF | 10% | 16V |
| C2102 | 1-107-826-11 | CERAMIC CHIP | 0.1uF | 10% | 16V |
| C2103 | 1-107-826-11 | CERAMIC CHIP | 0.1uF | 10% | 16V |
| C2108 | 1-127-760-11 | CERAMIC CHIP | 4.7uF | 10% | 6.3V |
| C2109 | 1-126-206-11 | ELECT CHIP | 100uF | 20% | 6.3V |
| C2110 | 1-126-206-11 | ELECT CHIP | 100uF | 20% | 6.3V |
| C2112 | 1-126-923-11 | ELECT | 220uF | 20% | 10V |
| C2114 | 1-107-826-11 | CERAMIC CHIP | 0.1uF | 10% | 16V |
| C2115 | 1-165-989-11 | CERAMIC CHIP | 10uF | 10% | 6.3V |
| C2116 | 1-107-826-11 | CERAMIC CHIP | 0.1uF | 10% | 16V |
| C2117 | 1-165-989-11 | CERAMIC CHIP | 10uF | 10% | 6.3V |
| C2118 | 1-107-826-11 | CERAMIC CHIP | 0.1uF | 10% | 16V |
| C2119 | 1-162-964-11 | CERAMIC CHIP | 0.001uF | 10% | 50V |
| C2130 | 1-162-970-11 | CERAMIC CHIP | 0.01uF | 10% | 25V |
| C2502 | 1-164-172-11 | CERAMIC CHIP | 0.0056uF | 10% | 25V |
| C2503 | 1-127-760-11 | CERAMIC CHIP | 4.7uF | 10% | 6.3V |
| C3000 | 1-126-382-11 | ELECT | 100uF | 20% | 16V |
| C3001 | 1-126-947-11 | ELECT | 47uF | 20% | 35V |
| C3002 | 1-115-339-11 | CERAMIC CHIP | 0.1uF | 10% | 50V |
| C3003 | 1-162-964-11 | CERAMIC CHIP | 0.001uF | 10% | 50V |
| C3005 | 1-126-795-11 | ELECT | 10uF | 20% | 50V |
| C3008 | 1-107-826-11 | CERAMIC CHIP | 0.1uF | 10% | 16V (DZ860W/DZ870W) |
| C3011 | 1-126-947-11 | ELECT | 47uF | 20% | 35V |
| C3012 | 1-107-826-11 | CERAMIC CHIP | 0.1uF | 10% | 16V |
| C3013 | 1-107-826-11 | CERAMIC CHIP | 0.1uF | 10% | 16V |
| C3014 | 1-107-826-11 | CERAMIC CHIP | 0.1uF | 10% | 16V |
| C3015 | 1-107-826-11 | CERAMIC CHIP | 0.1uF | 10% | 16V |
| C3016 | 1-107-826-11 | CERAMIC CHIP | 0.1uF | 10% | 16V |
| C3017 | 1-107-826-11 | CERAMIC CHIP | 0.1uF | 10% | 16V |
| C3018 | 1-107-826-11 | CERAMIC CHIP | 0.1uF | 10% | 16V |
| C3019 | 1-107-826-11 | CERAMIC CHIP | 0.1uF | 10% | 16V |
| C3020 | 1-107-826-11 | CERAMIC CHIP | 0.1uF | 10% | 16V |
| C3021 | 1-126-947-11 | ELECT | 47uF | 20% | 35V (DZ870M) |
| C3022 | 1-107-826-11 | CERAMIC CHIP | 0.1uF | 10% | 16V (DZ870M) |
| C3023 | 1-107-826-11 | CERAMIC CHIP | 0.1uF | 10% | 16V (DZ870M) |
| C3024 | 1-107-826-11 | CERAMIC CHIP | 0.1uF | 10% | 16V (DZ870M) |
| C3025 | 1-107-826-11 | CERAMIC CHIP | 0.1uF | 10% | 16V (DZ870M) |
| C3026 | 1-107-826-11 | CERAMIC CHIP | 0.1uF | 10% | 16V (DZ870M) |
| C3027 | 1-107-826-11 | CERAMIC CHIP | 0.1uF | 10% | 16V (DZ870M) |
| C3028 | 1-107-826-11 | CERAMIC CHIP | 0.1uF | 10% | 16V (DZ870M) |
| C3029 | 1-107-826-11 | CERAMIC CHIP | 0.1uF | 10% | 16V (DZ870M) |
| C3030 | 1-107-826-11 | CERAMIC CHIP | 0.1uF | 10% | 16V (DZ870M) |
| C3031 | 1-126-947-11 | ELECT | 47uF | 20% | 35V |
| C3032 | 1-107-826-11 | CERAMIC CHIP | 0.1uF | 10% | 16V |
| C3033 | 1-107-826-11 | CERAMIC CHIP | 0.1uF | 10% | 16V |
| C3034 | 1-107-826-11 | CERAMIC CHIP | 0.1uF | 10% | 16V |
| C3035 | 1-107-826-11 | CERAMIC CHIP | 0.1uF | 10% | 16V |
| C3036 | 1-107-826-11 | CERAMIC CHIP | 0.1uF | 10% | 16V |
| C3037 | 1-107-826-11 | CERAMIC CHIP | 0.1uF | 10% | 16V |
| C3038 | 1-107-826-11 | CERAMIC CHIP | 0.1uF | 10% | 16V |
| C3039 | 1-107-826-11 | CERAMIC CHIP | 0.1uF | 10% | 16V |
| C3040 | 1-107-826-11 | CERAMIC CHIP | 0.1uF | 10% | 16V |
| C3051 | 1-115-339-11 | CERAMIC CHIP | 0.1uF | 10% | 50V |
| C3052 | 1-165-908-11 | CERAMIC CHIP | 1uF | 10% | 10V |
| C3053 | 1-107-826-11 | CERAMIC CHIP | 0.1uF | 10% | 16V |
| C3054 | 1-126-933-11 | ELECT | 100uF | 20% | 16V |
| C3055 | 1-162-970-11 | CERAMIC CHIP | 0.01uF | 10% | 25V |
| C3056 | 1-126-923-11 | ELECT | 220uF | 20% | 10V |
| C3057 | 1-162-970-11 | CERAMIC CHIP | 0.01uF | 10% | 25V |
| C3058 | 1-162-910-11 | CERAMIC CHIP | 5PF | 0.25PF | 50V |
| C3059 | 1-162-964-11 | CERAMIC CHIP | 0.001uF | 10% | 50V |
| C3060 | 1-162-915-11 | CERAMIC CHIP | 10PF | 0.5PF | 50V |
| C3071 | 1-162-970-11 | CERAMIC CHIP | 0.01uF | 10% | 25V |
| C3072 | 1-107-826-11 | CERAMIC CHIP | 0.1uF | 10% | 16V |
| C3073 | 1-107-826-11 | CERAMIC CHIP | 0.1uF | 10% | 16V |
| C3081 | 1-126-923-11 | ELECT | 220uF | 20% | 10V (DZ860W/DZ870W) |
| C3082 | 1-126-923-11 | ELECT | 220uF | 20% | 10V (DZ860W/DZ870W) |
| C3083 | 1-162-927-11 | CERAMIC CHIP | 100PF | 5% | 50V (DZ860W/DZ870W) |
| C3084 | 1-162-927-11 | CERAMIC CHIP | 100PF | 5% | 50V (DZ860W/DZ870W) |
| C3085 | 1-162-927-11 | CERAMIC CHIP | 100PF | 5% | 50V (DZ860W/DZ870W) |
| C3086 | 1-162-927-11 | CERAMIC CHIP | 100PF | 5% | 50V (DZ860W/DZ870W) |
| C3087 | 1-162-927-11 | CERAMIC CHIP | 100PF | 5% | 50V (DZ860W/DZ870W) |
| C3088 | 1-162-927-11 | CERAMIC CHIP | 100PF | 5% | 50V (DZ860W/DZ870W) |
| C3090 | 1-104-658-11 | ELECT | 100uF | 20% | 10V (DZ860W/DZ870W) |
| C3091 | 1-126-934-11 | ELECT | 220uF | 20% | 16V |
| C3092 | 1-162-927-11 | CERAMIC CHIP | 100PF | 5% | 50V (DZ860W/DZ870W) |
| C3093 | 1-162-927-11 | CERAMIC CHIP | 100PF | 5% | 50V (DZ860W/DZ870W) |
| C3094 | 1-162-927-11 | CERAMIC CHIP | 100PF | 5% | 50V (DZ860W/DZ870W) |
| C3100 | 1-104-329-11 | CERAMIC CHIP | 0.1uF | 10% | 50V |
| C3103 | 1-107-725-11 | CERAMIC CHIP | 0.1uF | 10% | 16V |
| C3104 | 1-107-826-11 | CERAMIC CHIP | 0.1uF | 10% | 16V |
| C3105 | 1-107-725-11 | CERAMIC CHIP | 0.1uF | 10% | 16V |
| C3106 | 1-115-185-11 | CERAMIC CHIP | 0.033uF | 10% | 50V |
| C3107 | 1-115-185-11 | CERAMIC CHIP | 0.033uF | 10% | 50V |
| C3108 | 1-104-329-11 | CERAMIC CHIP | 0.1uF | 10% | 50V |
| C3109 | 1-112-246-11 | ELECT | 100uF | 20% | 35V |
| C3112 | 1-112-246-11 | ELECT | 100uF | 20% | 35V |
| C3113 | 1-104-329-11 | CERAMIC CHIP | 0.1uF | 10% | 50V |
| C3114 | 1-137-198-81 | FILM | 1uF | 5% | 50V |
| C3115 | 1-137-198-81 | FILM | 1uF | 5% | 50V |
| C3116 | 1-112-831-11 | ELECT | 2200uF | 20% | 35V (DZ870KW/DZ870M/DZ870W) |
| C3116 | 1-126-953-11 | ELECT | 2200uF | 20% | 35V (DZ860W) |
| C3117 | 1-104-329-11 | CERAMIC CHIP | 0.1uF | 10% | 50V |
| C3122 | 1-162-964-11 | CERAMIC CHIP | 0.001uF | 10% | 50V |
| C3123 | 1-162-964-11 | CERAMIC CHIP | 0.001uF | 10% | 50V |
| C3124 | 1-164-505-11 | CERAMIC CHIP | 2.2uF | | 16V |

## MAIN

| Ref. No. | Part No. | Description | | | Remark |
|---|---|---|---|---|---|
| C3125 | 1-164-505-11 | CERAMIC CHIP | 2.2uF | | 16V |
| C3126 | 1-164-505-11 | CERAMIC CHIP | 2.2uF | | 16V (DZ870M) |
| C3127 | 1-164-505-11 | CERAMIC CHIP | 2.2uF | | 16V (DZ870M) |
| C3128 | 1-164-505-11 | CERAMIC CHIP | 2.2uF | | 16V |
| C3129 | 1-117-370-11 | CERAMIC CHIP | 10uF | | 10V |
| C3150 | 1-104-329-11 | CERAMIC CHIP | 0.1uF | 10% | 50V |
| C3153 | 1-107-725-11 | CERAMIC CHIP | 0.1uF | 10% | 16V |
| C3154 | 1-107-826-11 | CERAMIC CHIP | 0.1uF | 10% | 16V |
| C3155 | 1-107-725-11 | CERAMIC CHIP | 0.1uF | 10% | 16V |
| C3156 | 1-115-185-11 | CERAMIC CHIP | 0.033uF | 10% | 50V |
| C3157 | 1-115-185-11 | CERAMIC CHIP | 0.033uF | 10% | 50V |
| C3158 | 1-104-329-11 | CERAMIC CHIP | 0.1uF | 10% | 50V |
| C3159 | 1-112-246-11 | ELECT | 100uF | 20% | 35V |
| C3162 | 1-112-246-11 | ELECT | 100uF | 20% | 35V |
| C3163 | 1-104-329-11 | CERAMIC CHIP | 0.1uF | 10% | 50V |
| C3164 | 1-137-198-81 | FILM | 1uF | 5% | 50V |
| C3165 | 1-137-198-81 | FILM | 1uF | 5% | 50V |
| C3166 | 1-112-831-11 | ELECT | 2200uF | 20% | 35V (DZ870KW/DZ870M/DZ870W) |
| C3166 | 1-126-953-11 | ELECT | 2200uF | 20% | 35V (DZ860W) |
| C3167 | 1-104-329-11 | CERAMIC CHIP | 0.1uF | 10% | 50V |
| C3172 | 1-162-964-11 | CERAMIC CHIP | 0.001uF | 10% | 50V |
| C3173 | 1-162-964-11 | CERAMIC CHIP | 0.001uF | 10% | 50V |
| C3200 | 1-104-329-11 | CERAMIC CHIP | 0.1uF | 10% | 50V (DZ870M) |
| C3203 | 1-107-725-11 | CERAMIC CHIP | 0.1uF | 10% | 16V (DZ870M) |
| C3204 | 1-107-826-11 | CERAMIC CHIP | 0.1uF | 10% | 16V (DZ870M) |
| C3205 | 1-107-725-11 | CERAMIC CHIP | 0.1uF | 10% | 16V (DZ870M) |
| C3206 | 1-115-185-11 | CERAMIC CHIP | 0.033uF | 10% | 50V (DZ870M) |
| C3207 | 1-115-185-11 | CERAMIC CHIP | 0.033uF | 10% | 50V (DZ870M) |
| C3208 | 1-104-329-11 | CERAMIC CHIP | 0.1uF | 10% | 50V (DZ870M) |
| C3209 | 1-112-246-11 | ELECT | 100uF | 20% | 35V (DZ870M) |
| C3212 | 1-112-246-11 | ELECT | 100uF | 20% | 35V (DZ870M) |
| C3213 | 1-104-329-11 | CERAMIC CHIP | 0.1uF | 10% | 50V (DZ870M) |
| C3214 | 1-137-198-81 | FILM | 1uF | 5% | 50V (DZ870M) |
| C3215 | 1-137-198-81 | FILM | 1uF | 5% | 50V (DZ870M) |
| C3216 | 1-112-831-11 | ELECT | 2200uF | 20% | 35V (DZ870M) |
| C3217 | 1-104-329-11 | CERAMIC CHIP | 0.1uF | 10% | 50V (DZ870M) |
| C3250 | 1-104-329-11 | CERAMIC CHIP | 0.1uF | 10% | 50V (DZ870M) |
| C3253 | 1-107-725-11 | CERAMIC CHIP | 0.1uF | 10% | 16V (DZ870M) |
| C3254 | 1-107-826-11 | CERAMIC CHIP | 0.1uF | 10% | 16V (DZ870M) |
| C3255 | 1-107-725-11 | CERAMIC CHIP | 0.1uF | 10% | 16V (DZ870M) |
| C3256 | 1-115-185-11 | CERAMIC CHIP | 0.033uF | 10% | 50V (DZ870M) |
| C3257 | 1-115-185-11 | CERAMIC CHIP | 0.033uF | 10% | 50V (DZ870M) |
| C3258 | 1-104-329-11 | CERAMIC CHIP | 0.1uF | 10% | 50V (DZ870M) |
| C3259 | 1-112-246-11 | ELECT | 100uF | 20% | 35V (DZ870M) |
| C3262 | 1-112-246-11 | ELECT | 100uF | 20% | 35V (DZ870M) |
| C3263 | 1-104-329-11 | CERAMIC CHIP | 0.1uF | 10% | 50V (DZ870M) |
| C3264 | 1-137-198-81 | FILM | 1uF | 5% | 50V (DZ870M) |
| C3265 | 1-137-198-81 | FILM | 1uF | 5% | 50V (DZ870M) |
| C3266 | 1-112-831-11 | ELECT | 2200uF | 20% | 35V (DZ870M) |
| C3267 | 1-104-329-11 | CERAMIC CHIP | 0.1uF | 10% | 50V (DZ870M) |
| C3300 | 1-104-329-11 | CERAMIC CHIP | 0.1uF | 10% | 50V |
| C3303 | 1-107-725-11 | CERAMIC CHIP | 0.1uF | 10% | 16V |
| C3304 | 1-107-826-11 | CERAMIC CHIP | 0.1uF | 10% | 16V |
| C3305 | 1-107-725-11 | CERAMIC CHIP | 0.1uF | 10% | 16V |
| C3306 | 1-115-185-11 | CERAMIC CHIP | 0.033uF | 10% | 50V |
| C3307 | 1-115-185-11 | CERAMIC CHIP | 0.033uF | 10% | 50V |
| C3308 | 1-104-329-11 | CERAMIC CHIP | 0.1uF | 10% | 50V |
| C3309 | 1-112-246-11 | ELECT | 100uF | 20% | 35V |
| C3312 | 1-112-246-11 | ELECT | 100uF | 20% | 35V |
| C3313 | 1-104-329-11 | CERAMIC CHIP | 0.1uF | 10% | 50V |
| C3314 | 1-137-198-81 | FILM | 1uF | 5% | 50V |
| C3315 | 1-137-198-81 | FILM | 1uF | 5% | 50V |
| C3316 | 1-112-831-11 | ELECT | 2200uF | 20% | 35V (DZ870KW/DZ870M/DZ870W) |
| C3316 | 1-126-953-11 | ELECT | 2200uF | 20% | 35V (DZ860W) |
| C3317 | 1-104-329-11 | CERAMIC CHIP | 0.1uF | 10% | 50V |
| C3322 | 1-162-964-11 | CERAMIC CHIP | 0.001uF | 10% | 50V (DZ870M) |
| C3323 | 1-162-964-11 | CERAMIC CHIP | 0.001uF | 10% | 50V (DZ870M) |
| C3400 | 1-104-329-11 | CERAMIC CHIP | 0.1uF | 10% | 50V |
| C3403 | 1-107-725-11 | CERAMIC CHIP | 0.1uF | 10% | 16V |
| C3404 | 1-107-826-11 | CERAMIC CHIP | 0.1uF | 10% | 16V |
| C3405 | 1-107-725-11 | CERAMIC CHIP | 0.1uF | 10% | 16V |
| C3406 | 1-115-185-11 | CERAMIC CHIP | 0.033uF | 10% | 50V |
| C3407 | 1-115-185-11 | CERAMIC CHIP | 0.033uF | 10% | 50V |
| C3408 | 1-104-329-11 | CERAMIC CHIP | 0.1uF | 10% | 50V |
| C3409 | 1-112-246-11 | ELECT | 100uF | 20% | 35V |
| C3412 | 1-112-246-11 | ELECT | 100uF | 20% | 35V |
| C3413 | 1-104-329-11 | CERAMIC CHIP | 0.1uF | 10% | 50V |
| C3414 | 1-137-198-81 | FILM | 1uF | 5% | 50V |
| C3415 | 1-137-198-81 | FILM | 1uF | 5% | 50V |
| C3416 | 1-112-831-11 | ELECT | 2200uF | 20% | 35V (DZ870KW/DZ870M/DZ870W) |
| C3416 | 1-126-953-11 | ELECT | 2200uF | 20% | 35V (DZ860W) |
| C3417 | 1-104-329-11 | CERAMIC CHIP | 0.1uF | 10% | 50V |
| C3422 | 1-162-964-11 | CERAMIC CHIP | 0.001uF | 10% | 50V (DZ870M) |
| C3423 | 1-162-964-11 | CERAMIC CHIP | 0.001uF | 10% | 50V (DZ870M) |
| C3500 | 1-104-329-11 | CERAMIC CHIP | 0.1uF | 10% | 50V |
| C3503 | 1-107-725-11 | CERAMIC CHIP | 0.1uF | 10% | 16V |
| C3504 | 1-107-826-11 | CERAMIC CHIP | 0.1uF | 10% | 16V |

| Ref. No. | Part No. | Description | | | Remark |
|---|---|---|---|---|---|
| C3505 | 1-107-725-11 | CERAMIC CHIP | 0.1uF | 10% | 16V |
| C3506 | 1-115-185-11 | CERAMIC CHIP | 0.033uF | 10% | 50V |
| C3507 | 1-115-185-11 | CERAMIC CHIP | 0.033uF | 10% | 50V |
| C3508 | 1-104-329-11 | CERAMIC CHIP | 0.1uF | 10% | 50V |
| C3509 | 1-112-246-11 | ELECT | 100uF | 20% | 35V |
| C3512 | 1-112-246-11 | ELECT | 100uF | 20% | 35V |
| C3513 | 1-104-329-11 | CERAMIC CHIP | 0.1uF | 10% | 50V |
| C3514 | 1-137-198-81 | FILM | 1uF | 5% | 50V |
| C3515 | 1-137-198-81 | FILM | 1uF | 5% | 50V |
| C3516 | 1-112-831-11 | ELECT | 2200uF | 20% | 35V (DZ870KW/DZ870M/DZ870W) |
| C3516 | 1-126-953-11 | ELECT | 2200uF | 20% | 35V (DZ860W) |
| C3517 | 1-104-329-11 | CERAMIC CHIP | 0.1uF | 10% | 50V |
| C3551 | 1-126-960-11 | ELECT | 1uF | 20% | 50V |
| C3552 | 1-126-964-11 | ELECT | 10uF | 20% | 50V |
| C3553 | 1-115-339-11 | CERAMIC CHIP | 0.1uF | 10% | 50V |
| C3556 | 1-115-339-11 | CERAMIC CHIP | 0.1uF | 10% | 50V |
| C3561 | 1-165-989-11 | CERAMIC CHIP | 10uF | 10% | 6.3V |
| C3901 | 1-162-964-11 | CERAMIC CHIP | 0.001uF | 10% | 50V |
| C3902 | 1-162-964-11 | CERAMIC CHIP | 0.001uF | 10% | 50V |
| C3903 | 1-162-964-11 | CERAMIC CHIP | 0.001uF | 10% | 50V |
| C3904 | 1-162-964-11 | CERAMIC CHIP | 0.001uF | 10% | 50V |
| C3911 | 1-163-021-11 | CERAMIC CHIP | 0.01uF | 10% | 50V |
| C3912 | 1-163-021-11 | CERAMIC CHIP | 0.01uF | 10% | 50V |
| C3913 | 1-163-021-11 | CERAMIC CHIP | 0.01uF | 10% | 50V |
| C3914 | 1-163-021-11 | CERAMIC CHIP | 0.01uF | 10% | 50V |
| C9972 | 1-107-826-11 | CERAMIC CHIP | 0.1uF | 10% | 16V |
| | | < CONNECTOR > | | | |
| CN204 | 1-817-615-21 | CONNECTOR, SQUARE TYPE (RECE) 18P | | | (DMPORT) |
| CN502 | 1-820-117-41 | CONNECTOR, FFC/FPC 19P | | | |
| CN504 | 1-784-861-51 | CONNECTOR, FFC (LIF(NON-ZIF)) 9P | | | |
| CN512 | 1-506-469-11 | PIN, CONNECTOR 4P (DZ870KW) | | | |
| CN513 | 1-506-469-11 | PIN, CONNECTOR 4P (DZ870KW) | | | |
| CN604 | 1-785-468-41 | CONNECTOR, FFC/FPC 13P (DZ870M) | | | |
| CN605 | 1-820-113-41 | CONNECTOR, FFC/FPC 11P (DZ860W/DZ870KW) | | | |
| CN606 | 1-820-112-41 | CONNECTOR, FFC/FPC 9P (DZ870W) | | | |
| CN625 | 1-573-845-11 | CONNECTOR, BOARD TO BOARD 13P | | | |
| CN651 | 1-779-285-11 | CONNECTOR, FFC (LIF(NON-ZIF)) 17P | | | |
| CN701 | 1-779-275-11 | CONNECTOR, FFC (LIF(NON-ZIF)) 7P | | | (DZ870KW/DZ870M) |
| CN702 | 1-779-273-11 | CONNECTOR, FFC (LIF(NON-ZIF)) 5P | | | (DZ860W/DZ870W) |
| CN703 | 1-821-706-11 | CONNECTOR, BOARD TO BOARD 30P | | | |
| CN1101 | 1-815-763-32 | CONNECTOR, FFC/FPC 24P | | | |
| * CN1105 | 1-564-708-11 | PIN, CONNECTOR (SMALL TYPE) 6P | | | |
| * CN1201 | 1-564-708-11 | PIN, CONNECTOR (SMALL TYPE) 6P | | | |
| CN1202 | 1-784-365-51 | CONNECTOR, FFC/FPC 5P | | | |
| CN1701 | 1-821-755-11 | CONNECTOR, HDMI 19P (HDMI OUT) | | | |
| CN2101 | 1-564-707-11 | PIN, CONNECTOR (SMALL TYPE) 5P | | | |
| CN3000 | 1-564-704-41 | PIN, CONNECTOR (SMALL TYPE) 2P | | | |
| CN3001 | 1-564-706-11 | PIN, CONNECTOR (SMALL TYPE) 4P | | | (DZ860W/DZ870W) |
| CN4301 | 1-820-117-41 | CONNECTOR, FFC/FPC 19P (DZ860W) | | | |
| CN4302 | 1-820-116-41 | CONNECTOR, FFC/FPC 17P | | | (DZ870KW/DZ870M/DZ870W) |
| | | < DIODE > | | | |
| D501 | 6-501-817-01 | DIODE MA2J1110GLS0 | | | |
| D502 | 6-500-334-01 | DIODE MC2836-T112-1 | | | |
| D505 | 6-500-334-01 | DIODE MC2836-T112-1 | | | |
| D701 | 6-501-579-01 | DIODE MC2837 | | | |
| D2101 | 6-501-749-01 | DIODE MAZ8082G0LS0 | | | |
| D2102 | 6-501-740-01 | DIODE MAZ8068G0LS0 | | | |
| D2103 | 6-501-740-01 | DIODE MAZ8068G0LS0 | | | |
| D3551 | 6-501-579-01 | DIODE MC2837 | | | |
| D3552 | 6-501-774-01 | DIODE MAZ8150G0LS0 | | | |
| D4111 | 6-501-696-01 | DIODE RSA39LTE25 | | | |
| D4112 | 6-501-696-01 | DIODE RSA39LTE25 | | | |
| D4151 | 6-501-696-01 | DIODE RSA39LTE25 | | | |
| D4152 | 6-501-696-01 | DIODE RSA39LTE25 | | | |
| D4201 | 6-501-696-01 | DIODE RSA39LTE25 (DZ870M) | | | |
| D4202 | 6-501-696-01 | DIODE RSA39LTE25 (DZ870M) | | | |
| D4251 | 6-501-696-01 | DIODE RSA39LTE25 (DZ870M) | | | |
| D4252 | 6-501-696-01 | DIODE RSA39LTE25 (DZ870M) | | | |
| D4301 | 6-501-696-01 | DIODE RSA39LTE25 | | | |
| D4302 | 6-501-696-01 | DIODE RSA39LTE25 | | | |
| D4401 | 6-501-696-01 | DIODE RSA39LTE25 | | | |
| D4402 | 6-501-696-01 | DIODE RSA39LTE25 | | | |
| D4501 | 6-501-696-01 | DIODE RSA39LTE25 | | | |
| D4502 | 6-501-696-01 | DIODE RSA39LTE25 | | | |
| D9712 | 6-501-817-01 | DIODE MA2J1110GLS0 | | | |
| | | < FERRITE BEAD > | | | |
| FB505 | 1-469-365-21 | INDUCTOR, FERRITE BEAD FBMJ2125 | | | |
| FB506 | 1-469-324-21 | FERRITE, EMI (SMD) (2012) | | | |
| FB508 | 1-469-365-21 | INDUCTOR, FERRITE BEAD FBMJ2125 | | | |
| FB510 | 1-469-324-21 | FERRITE, EMI (SMD) (2012) | | | |
| FB1106 | 1-469-324-21 | FERRITE, EMI (SMD) (2012) | | | |
| FB1107 | 1-469-324-21 | FERRITE, EMI (SMD) (2012) | | | |
| FB1108 | 1-469-324-21 | FERRITE, EMI (SMD) (2012) | | | |
| FB1109 | 1-469-324-21 | FERRITE, EMI (SMD) (2012) | | | |
| FB1111 | 1-469-670-21 | FERRITE, EMI (SMD) (2012) | | | |
| FB1112 | 1-469-670-21 | FERRITE, EMI (SMD) (2012) | | | |
| FB1113 | 1-469-670-21 | FERRITE, EMI (SMD) (2012) | | | |
| FB1115 | 1-469-670-21 | FERRITE, EMI (SMD) (2012) | | | |
| FB1116 | 1-469-670-21 | FERRITE, EMI (SMD) (2012) | | | |
| FB1117 | 1-469-670-21 | FERRITE, EMI (SMD) (2012) | | | |
| FB1118 | 1-469-670-21 | FERRITE, EMI (SMD) (2012) | | | |
| FB2101 | 1-469-324-21 | FERRITE, EMI (SMD) (2012) | | | |
| FB2102 | 1-469-379-11 | FERRITE, EMI (SMD) (2012) | | | |
| FB2103 | 1-469-324-21 | FERRITE, EMI (SMD) (2012) | | | |
| FB2104 | 1-469-379-11 | FERRITE, EMI (SMD) (2012) | | | |
| FB2105 | 1-469-379-11 | FERRITE, EMI (SMD) (2012) | | | |
| FB2120 | 1-469-118-21 | FERRITE, EMI (SMD) (1608) | | | |
| FB2121 | 1-469-118-21 | FERRITE, EMI (SMD) (1608) | | | |
| FB2122 | 1-469-118-21 | FERRITE, EMI (SMD) (1608) | | | |
| FB2124 | 1-469-118-21 | FERRITE, EMI (SMD) (1608) | | | |
| FB2125 | 1-469-118-21 | FERRITE, EMI (SMD) (1608) | | | |
| | | < IC > | | | |
| IC201 | 6-712-613-01 | IC SI-3010KM-TLS | | | |
| IC202 | 8-759-710-97 | IC NJM4565M-D | | | |
| IC301 | 6-600-466-01 | IC TORX147L(SONY) | | | (TV (DIGITAL IN OPTICAL)) |
| IC302 | 6-706-492-01 | IC TC7SHU04FU(T5RSOJF) | | | |
| IC501 | A-1545-424-A | IC R5F3640MDFAR (for SERVICE) | | | (DZ860W/DZ870W) |
| IC501 | A-1555-000-A | IC R5F3640MDFAR (for SERVICE) | | | (DZ870KW/DZ870M) |

## MAIN

| Ref. No. | Part No. | Description | Remark |
|---|---|---|---|
| IC502 | 6-705-338-01 | IC TK11250CMCL-G | |
| IC503 | 6-708-922-01 | IC PST3635NR | |
| IC504 | 6-712-613-01 | IC SI-3010KM-TLS | |
| IC505 | 6-712-613-01 | IC SI-3010KM-TLS | |
| IC506 | 6-712-613-01 | IC SI-3010KM-TLS | |
| IC507 | 6-705-337-01 | IC TK11150CSCL-G | |
| IC510 | (Not supplied) | IC S-24CS16A0I-J8T1G | |
| IC702 | 6-805-692-01 | IC LC890561W | |
| * IC704 | 6-707-847-01 | IC TC74LCX157FT(EKJ) | |
| IC707 | 6-710-554-01 | IC PCM1808PWR | |
| IC1101 | 6-711-522-01 | IC CXD9917R | |
| IC1102 | 6-807-959-01 | IC S29AL032D70TF-OHE2-0801CE (DZ870M) | |
| IC1102 | 6-807-960-01 | IC S29AL032D70TF-OHE2-0801GA (DZ870KW) | |
| IC1102 | 6-807-977-01 | IC ES29LV320EB70TG-OHE1-0801UC (DZ870W:E32,MX) | |
| IC1102 | 6-807-978-01 | IC ES29LV320EB70TG-OHE1-0801CE (DZ860W/DZ870W:E3,E15,AUS,EA) | |
| IC1102 | 6-807-979-01 | IC ES29LV320EB70TG-OHE1-0801GA (DZ870W:KR,TW) | |
| IC1103 | (Not supplied) | IC S-24CS64A01-J8T1G | |
| IC1104 | 6-707-897-01 | IC EDS6416AHTA-75-E | |
| IC1105 | 6-702-302-01 | IC TK11133CSCL-G | |
| IC1107 | 6-702-302-01 | IC TK11133CSCL-G | |
| IC1110 | 6-707-739-01 | IC MM1661JTRE | |
| IC1201 | 6-704-524-01 | IC FAN8036L | |
| IC1705 | 8-759-592-47 | IC TC7SZ08FU(TE85R) | |
| IC1706 | 8-759-592-47 | IC TC7SZ08FU(TE85R) | |
| IC1707 | 6-705-337-01 | IC TK11150CSCL-G | |
| IC1708 | 6-702-302-01 | IC TK11133CSCL-G | |
| IC2101 | 8-759-700-07 | IC NJM2903M | |
| IC3001 | 8-759-710-97 | IC NJM4565M-D (DZ860W/DZ870W) | |
| IC3003 | 8-759-680-48 | IC TC7WH157FK(TE85R) | |
| IC3010 | 6-705-979-01 | IC CXD9788AR | |
| IC3020 | 6-705-979-01 | IC CXD9788AR (DZ870M) | |
| IC3030 | 6-705-979-01 | IC CXD9788AR | |
| IC3050 | 6-702-300-01 | IC TK11118CSCL-G | |
| IC3051 | 6-709-888-01 | IC TC7WHU04FK(T5RSOYF) | |
| IC3100 | 6-708-921-01 | IC CXD9883M | |
| IC3150 | 6-708-921-01 | IC CXD9883M | |
| IC3200 | 6-708-921-01 | IC CXD9883M (DZ870M) | |
| IC3250 | 6-708-921-01 | IC CXD9883M (DZ870M) | |
| IC3300 | 6-708-921-01 | IC CXD9883M | |
| IC3400 | 6-708-921-01 | IC CXD9883M | |
| IC3500 | 6-708-921-01 | IC CXD9883M | |
| | | < JACK > | |
| J302 | 1-784-431-11 | JACK, PIN 1P (TV (DIGITAL IN COAXIAL)) | |
| | | < COIL > | |
| L200 | 1-469-525-91 | INDUCTOR 10uH | |
| L301 | 1-469-525-91 | INDUCTOR 10uH | |
| L302 | 1-469-525-91 | INDUCTOR 10uH | |
| L701 | 1-469-525-91 | INDUCTOR 10uH | |
| L702 | 1-469-525-91 | INDUCTOR 10uH | |
| L703 | 1-469-525-91 | INDUCTOR 10uH | |
| L1701 | 1-457-374-21 | COIL, COMMON MODE CHOKE | |
| L1702 | 1-457-374-21 | COIL, COMMON MODE CHOKE | |
| L1703 | 1-457-374-21 | COIL, COMMON MODE CHOKE | |
| L1704 | 1-457-374-21 | COIL, COMMON MODE CHOKE | |
| L2101 | 1-457-374-21 | COIL, COMMON MODE CHOKE | |

| Ref. No. | Part No. | Description | Remark |
|---|---|---|---|
| L3000 | 1-469-527-91 | INDUCTOR 47uH | |
| L3051 | 1-469-525-91 | INDUCTOR 10uH | |
| L3052 | 1-469-525-91 | INDUCTOR 10uH | |
| L3053 | 1-469-525-91 | INDUCTOR 10uH | |
| L3054 | 1-412-939-11 | INDUCTOR 1uH | |
| L3101 | 1-457-579-11 | COIL, CHOKE 10uH | |
| L3102 | 1-457-579-11 | COIL, CHOKE 10uH | |
| L3201 | 1-457-579-11 | COIL, CHOKE 10uH (DZ870M) | |
| L3202 | 1-457-579-11 | COIL, CHOKE 10uH (DZ870M) | |
| L3301 | 1-457-579-11 | COIL, CHOKE 10uH | |
| L3401 | 1-457-579-11 | COIL, CHOKE 10uH | |
| L3501 | 1-457-579-11 | COIL, CHOKE 10uH | |
| L3901 | 1-457-078-11 | COIL, AIR-CORE | |
| L3902 | 1-457-077-11 | COIL, AIR-CORE | |
| L3903 | 1-457-078-11 | COIL, AIR-CORE | |
| L3904 | 1-457-077-11 | COIL, AIR-CORE | |
| | | < TRANSISTOR > | |
| Q503 | 8-729-620-07 | TRANSISTOR 2SC3052EF-T1-LEF | |
| Q631 | 8-729-620-07 | TRANSISTOR 2SC3052EF-T1-LEF | |
| Q632 | 8-729-620-07 | TRANSISTOR 2SC3052EF-T1-LEF | |
| Q1101 | 6-550-008-01 | FET UM6K1N-TN | |
| Q1102 | 6-550-653-01 | TRANSISTOR QST8TR | |
| Q1103 | 8-729-027-52 | TRANSISTOR DTC124EKA-T146 | |
| Q1701 | 6-550-008-01 | FET UM6K1N-TN | |
| Q3000 | 8-729-111-29 | TRANSISTOR 2SD1616A-K | |
| Q3001 | 8-729-620-07 | TRANSISTOR 2SC3052EF-T1-LEF | |
| Q3002 | 8-729-620-07 | TRANSISTOR 2SC3052EF-T1-LEF | |
| Q3081 | 8-729-027-23 | TRANSISTOR DTA114EKA-T146 (DZ860W/DZ870W) | |
| Q3101 | 6-551-696-01 | TRANSISTOR ISA1235AC1TP-1EF | |
| Q3102 | 6-551-696-01 | TRANSISTOR ISA1235AC1TP-1EF | |
| Q3151 | 6-551-696-01 | TRANSISTOR ISA1235AC1TP-1EF | |
| Q3152 | 6-551-696-01 | TRANSISTOR ISA1235AC1TP-1EF | |
| Q3201 | 6-551-696-01 | TRANSISTOR ISA1235AC1TP-1EF (DZ870M) | |
| Q3202 | 6-551-696-01 | TRANSISTOR ISA1235AC1TP-1EF (DZ870M) | |
| Q3251 | 6-551-696-01 | TRANSISTOR ISA1235AC1TP-1EF | |
| Q3252 | 6-551-696-01 | TRANSISTOR ISA1235AC1TP-1EF | |
| Q3301 | 6-551-696-01 | TRANSISTOR ISA1235AC1TP-1EF | |
| Q3302 | 6-551-696-01 | TRANSISTOR ISA1235AC1TP-1EF | |
| Q3401 | 6-551-696-01 | TRANSISTOR ISA1235AC1TP-1EF (DZ870M) | |
| Q3402 | 6-551-696-01 | TRANSISTOR ISA1235AC1TP-1EF (DZ870M) | |
| Q3551 | 8-729-620-07 | TRANSISTOR 2SC3052EF-T1-LEF | |
| Q3552 | 8-729-620-07 | TRANSISTOR 2SC3052EF-T1-LEF | |
| Q3553 | 8-729-620-07 | TRANSISTOR 2SC3052EF-T1-LEF | |
| Q3554 | 8-729-620-07 | TRANSISTOR 2SC3052EF-T1-LEF | |
| Q3555 | 8-729-620-07 | TRANSISTOR 2SC3052EF-T1-LEF | |
| Q9724 | 6-551-699-01 | TRANSISTOR ISA1602AM1TP-1EF | |
| Q9726 | 8-729-620-13 | TRANSISTOR 2SC4154TP-1EF | |
| Q9728 | 8-729-620-13 | TRANSISTOR 2SC4154TP-1EF | |
| Q9729 | 8-729-027-43 | TRANSISTOR DTC114EKA-T146 | |
| | | < RESISTOR > | |
| R203 | 1-218-879-11 | METAL CHIP 22K 0.5% 1/10W | |
| R208 | 1-218-879-11 | METAL CHIP 22K 0.5% 1/10W | |
| R214 | 1-218-879-11 | METAL CHIP 22K 0.5% 1/10W | |
| R215 | 1-218-879-11 | METAL CHIP 22K 0.5% 1/10W | |
| R220 | 1-216-821-11 | METAL CHIP 1K 5% 1/10W | |
| R221 | 1-218-847-11 | METAL CHIP 1K 0.5% 1/10W | |
| R222 | 1-218-885-11 | METAL CHIP 39K 0.5% 1/10W | |

When IC510 and IC1103 on the Main board are damaged, exchange the new Main board for the Main board which IC damaged.

| Ref. No. | Part No. | Description | | | Remark |
|---|---|---|---|---|---|
| R223 | 1-218-871-11 | METAL CHIP | 10K | 0.5% | 1/10W |
| R227 | 1-218-879-11 | METAL CHIP | 22K | 0.5% | 1/10W |
| R228 | 1-218-879-11 | METAL CHIP | 22K | 0.5% | 1/10W |
| R229 | 1-218-879-11 | METAL CHIP | 22K | 0.5% | 1/10W |
| R230 | 1-218-879-11 | METAL CHIP | 22K | 0.5% | 1/10W |
| R231 | 1-216-827-11 | METAL CHIP | 3.3K | 5% | 1/10W |
| R232 | 1-216-829-11 | METAL CHIP | 4.7K | 5% | 1/10W |
| R317 | 1-216-809-11 | METAL CHIP | 100 | 5% | 1/10W |
| R318 | 1-216-809-11 | METAL CHIP | 100 | 5% | 1/10W |
| R319 | 1-216-841-11 | METAL CHIP | 47K | 5% | 1/10W |
| R328 | 1-218-285-11 | METAL CHIP | 75 | 5% | 1/10W |
| R329 | 1-216-817-11 | METAL CHIP | 470 | 5% | 1/10W |
| R501 | 1-216-857-11 | METAL CHIP | 1M | 5% | 1/10W |
| R504 | 1-216-821-11 | METAL CHIP | 1K | 5% | 1/10W (DZ870KW/DZ870W:TW) |
| R504 | 1-216-833-11 | METAL CHIP | 10K | 5% | 1/10W (DZ870W:E3,E15,EA) |
| R504 | 1-216-835-11 | METAL CHIP | 15K | 5% | 1/10W (DZ870W:AUS) |
| R504 | 1-216-841-11 | METAL CHIP | 47K | 5% | 1/10W (DZ870M/DZ870W:E32,KR,MX) |
| R505 | 1-216-823-11 | METAL CHIP | 1.5K | 5% | 1/10W (DZ870M) |
| R505 | 1-216-829-11 | METAL CHIP | 4.7K | 5% | 1/10W (DZ860W) |
| R505 | 1-218-867-11 | METAL CHIP | 6.8K | 0.5% | 1/10W (DZ870W:MX) |
| R505 | 1-216-833-11 | METAL CHIP | 10K | 5% | 1/10W (DZ870W:E32) |
| R505 | 1-216-835-11 | METAL CHIP | 15K | 5% | 1/10W (DZ870W:KR) |
| R505 | 1-216-841-11 | METAL CHIP | 47K | 5% | 1/10W (DZ870W:E3,E15,AUS,EA) |
| R506 | 1-216-821-11 | METAL CHIP | 1K | 5% | 1/10W (DZ870M) |
| R506 | 1-218-867-11 | METAL CHIP | 6.8K | 0.5% | 1/10W (DZ860W) |
| R506 | 1-216-837-11 | METAL CHIP | 22K | 5% | 1/10W (DZ870W) |
| R506 | 1-216-841-11 | METAL CHIP | 47K | 5% | 1/10W (DZ870KW) |
| R507 | 1-216-839-11 | METAL CHIP | 33K | 5% | 1/10W (DZ870KW) |
| R507 | 1-216-841-11 | METAL CHIP | 47K | 5% | 1/10W (DZ860W/DZ870W) |
| R508 | 1-216-864-11 | SHORT CHIP | 0 | | |
| R509 | 1-216-809-11 | METAL CHIP | 100 | 5% | 1/10W |
| R510 | 1-216-833-11 | METAL CHIP | 10K | 5% | 1/10W |
| R511 | 1-216-821-11 | METAL CHIP | 1K | 5% | 1/10W |
| R512 | 1-216-833-11 | METAL CHIP | 10K | 5% | 1/10W |
| R513 | 1-216-821-11 | METAL CHIP | 1K | 5% | 1/10W |
| R514 | 1-216-833-11 | METAL CHIP | 10K | 5% | 1/10W |
| R515 | 1-216-821-11 | METAL CHIP | 1K | 5% | 1/10W |
| R516 | 1-216-821-11 | METAL CHIP | 1K | 5% | 1/10W |
| R517 | 1-216-809-11 | METAL CHIP | 100 | 5% | 1/10W |
| R518 | 1-216-809-11 | METAL CHIP | 100 | 5% | 1/10W |
| R519 | 1-216-833-11 | METAL CHIP | 10K | 5% | 1/10W |
| R522 | 1-216-833-11 | METAL CHIP | 10K | 5% | 1/10W |
| R524 | 1-216-833-11 | METAL CHIP | 10K | 5% | 1/10W |
| R526 | 1-216-821-11 | METAL CHIP | 1K | 5% | 1/10W |
| R527 | 1-216-833-11 | METAL CHIP | 10K | 5% | 1/10W |
| R528 | 1-216-833-11 | METAL CHIP | 10K | 5% | 1/10W |
| R529 | 1-216-821-11 | METAL CHIP | 1K | 5% | 1/10W |

| Ref. No. | Part No. | Description | | | Remark |
|---|---|---|---|---|---|
| R530 | 1-216-809-11 | METAL CHIP | 100 | 5% | 1/10W |
| R531 | 1-216-833-11 | METAL CHIP | 10K | 5% | 1/10W |
| R532 | 1-216-821-11 | METAL CHIP | 1K | 5% | 1/10W |
| R533 | 1-216-809-11 | METAL CHIP | 100 | 5% | 1/10W |
| R534 | 1-216-833-11 | METAL CHIP | 10K | 5% | 1/10W |
| R535 | 1-216-809-11 | METAL CHIP | 100 | 5% | 1/10W |
| R536 | 1-216-864-11 | SHORT CHIP | 0 | | |
| R537 | 1-216-821-11 | METAL CHIP | 1K | 5% | 1/10W |
| R539 | 1-216-833-11 | METAL CHIP | 10K | 5% | 1/10W |
| R540 | 1-216-833-11 | METAL CHIP | 10K | 5% | 1/10W |
| R541 | 1-216-821-11 | METAL CHIP | 1K | 5% | 1/10W |
| R542 | 1-216-833-11 | METAL CHIP | 10K | 5% | 1/10W |
| R543 | 1-216-864-11 | SHORT CHIP | 0 | | |
| R544 | 1-216-833-11 | METAL CHIP | 10K | 5% | 1/10W |
| R546 | 1-216-821-11 | METAL CHIP | 1K | 5% | 1/10W |
| R547 | 1-216-864-11 | SHORT CHIP | 0 | | |
| R548 | 1-216-864-11 | SHORT CHIP | 0 | | |
| R549 | 1-218-885-11 | METAL CHIP | 39K | 0.5% | 1/10W |
| R550 | 1-216-864-11 | SHORT CHIP | 0 | | |
| R551 | 1-216-809-11 | METAL CHIP | 100 | 5% | 1/10W |
| R552 | 1-216-821-11 | METAL CHIP | 1K | 5% | 1/10W |
| R553 | 1-216-833-11 | METAL CHIP | 10K | 5% | 1/10W |
| R555 | 1-216-833-11 | METAL CHIP | 10K | 5% | 1/10W |
| R556 | 1-216-841-11 | METAL CHIP | 47K | 5% | 1/10W |
| R557 | 1-216-841-11 | METAL CHIP | 47K | 5% | 1/10W |
| R558 | 1-216-833-11 | METAL CHIP | 10K | 5% | 1/10W |
| R559 | 1-216-833-11 | METAL CHIP | 10K | 5% | 1/10W |
| R560 | 1-216-833-11 | METAL CHIP | 10K | 5% | 1/10W (DZ870KW/DZ870M) |
| R561 | 1-216-845-11 | METAL CHIP | 100K | 5% | 1/10W |
| R562 | 1-216-841-11 | METAL CHIP | 47K | 5% | 1/10W |
| R563 | 1-216-833-11 | METAL CHIP | 10K | 5% | 1/10W |
| R564 | 1-216-864-11 | SHORT CHIP | 0 | | |
| R565 | 1-216-864-11 | SHORT CHIP | 0 | | |
| R566 | 1-216-864-11 | SHORT CHIP | 0 | | |
| R567 | 1-216-864-11 | SHORT CHIP | 0 | | |
| R568 | 1-216-864-11 | SHORT CHIP | 0 | | |
| R569 | 1-216-864-11 | SHORT CHIP | 0 | | |
| R572 | 1-218-851-11 | METAL CHIP | 1.5K | 0.5% | 1/10W |
| R573 | 1-218-871-11 | METAL CHIP | 10K | 0.5% | 1/10W |
| R576 | 1-216-829-11 | METAL CHIP | 4.7K | 5% | 1/10W |
| R577 | 1-216-829-11 | METAL CHIP | 4.7K | 5% | 1/10W |
| R578 | 1-216-829-11 | METAL CHIP | 4.7K | 5% | 1/10W |
| R579 | 1-216-809-11 | METAL CHIP | 100 | 5% | 1/10W |
| R580 | 1-216-809-11 | METAL CHIP | 100 | 5% | 1/10W |
| R581 | 1-216-809-11 | METAL CHIP | 100 | 5% | 1/10W |
| R582 | 1-216-833-11 | METAL CHIP | 10K | 5% | 1/10W |
| R583 | 1-216-841-11 | METAL CHIP | 47K | 5% | 1/10W |
| R584 | 1-216-821-11 | METAL CHIP | 1K | 5% | 1/10W |
| R585 | 1-216-864-11 | SHORT CHIP | 0 (DZ860W) | | |
| R586 | 1-216-833-11 | METAL CHIP | 10K | 5% | 1/10W |
| R587 | 1-218-871-11 | METAL CHIP | 10K | 0.5% | 1/10W |
| R588 | 1-218-885-11 | METAL CHIP | 39K | 0.5% | 1/10W |
| R589 | 1-218-847-11 | METAL CHIP | 1K | 0.5% | 1/10W |
| R590 | 1-216-821-11 | METAL CHIP | 1K | 5% | 1/10W |
| R591 | 1-216-864-11 | SHORT CHIP | 0 | | |
| R592 | 1-216-864-11 | SHORT CHIP | 0 | | |
| R593 | 1-216-833-11 | METAL CHIP | 10K | 5% | 1/10W |
| R595 | 1-216-833-11 | METAL CHIP | 10K | 5% | 1/10W |
| R596 | 1-218-871-11 | METAL CHIP | 10K | 0.5% | 1/10W |
| R597 | 1-218-879-11 | METAL CHIP | 22K | 0.5% | 1/10W |

## MAIN

| Ref. No. | Part No. | Description | | | Remark |
|---|---|---|---|---|---|
| R598 | 1-218-851-11 | METAL CHIP | 1.5K | 0.5% | 1/10W |
| R599 | 1-216-821-11 | METAL CHIP | 1K | 5% | 1/10W |
| R601 | 1-216-809-11 | METAL CHIP | 100 | 5% | 1/10W |
| | | | | | (DZ860W/DZ870M) |
| R602 | 1-216-809-11 | METAL CHIP | 100 | 5% | 1/10W |
| | | | | | (DZ860W/DZ870M) |
| R603 | 1-216-809-11 | METAL CHIP | 100 | 5% | 1/10W |
| R604 | 1-216-809-11 | METAL CHIP | 100 | 5% | 1/10W |
| R605 | 1-216-809-11 | METAL CHIP | 100 | 5% | 1/10W |
| R606 | 1-216-809-11 | METAL CHIP | 100 | 5% | 1/10W |
| R607 | 1-216-809-11 | METAL CHIP | 100 | 5% | 1/10W |
| R608 | 1-216-829-11 | METAL CHIP | 4.7K | 5% | 1/10W |
| R609 | 1-216-829-11 | METAL CHIP | 4.7K | 5% | 1/10W |
| R610 | 1-216-864-11 | SHORT CHIP | 0 | | |
| R611 | 1-216-809-11 | METAL CHIP | 100 | 5% | 1/10W |
| R612 | 1-216-809-11 | METAL CHIP | 100 | 5% | 1/10W |
| R613 | 1-216-809-11 | METAL CHIP | 100 | 5% | 1/10W |
| R621 | 1-216-809-11 | METAL CHIP | 100 | 5% | 1/10W |
| R622 | 1-216-809-11 | METAL CHIP | 100 | 5% | 1/10W |
| R623 | 1-216-809-11 | METAL CHIP | 100 | 5% | 1/10W |
| R624 | 1-216-809-11 | METAL CHIP | 100 | 5% | 1/10W |
| R625 | 1-216-809-11 | METAL CHIP | 100 | 5% | 1/10W |
| R626 | 1-216-833-11 | METAL CHIP | 10K | 5% | 1/10W |
| R627 | 1-216-837-11 | METAL CHIP | 22K | 5% | 1/10W |
| R628 | 1-216-841-11 | METAL CHIP | 47K | 5% | 1/10W |
| R629 | 1-216-809-11 | METAL CHIP | 100 | 5% | 1/10W |
| R631 | 1-216-833-11 | METAL CHIP | 10K | 5% | 1/10W |
| R632 | 1-216-841-11 | METAL CHIP | 47K | 5% | 1/10W |
| R633 | 1-216-864-11 | SHORT CHIP | 0 (DZ870KW/DZ870M) | | |
| R634 | 1-216-864-11 | SHORT CHIP | 0 (DZ870KW/DZ870M) | | |
| R635 | 1-216-809-11 | METAL CHIP | 100 | 5% | 1/10W |
| | | | | | (DZ870KW/DZ870M) |
| R636 | 1-216-864-11 | SHORT CHIP | 0 | | |
| R637 | 1-216-809-11 | METAL CHIP | 100 | 5% | 1/10W |
| | | | | | (DZ870KW/DZ870M) |
| R638 | 1-216-864-11 | SHORT CHIP | 0 | | |
| R639 | 1-216-809-11 | METAL CHIP | 100 | 5% | 1/10W |
| R640 | 1-216-809-11 | METAL CHIP | 100 | 5% | 1/10W |
| R641 | 1-216-809-11 | METAL CHIP | 100 | 5% | 1/10W |
| R642 | 1-216-809-11 | METAL CHIP | 100 | 5% | 1/10W |
| R643 | 1-216-809-11 | METAL CHIP | 100 | 5% | 1/10W |
| R644 | 1-216-809-11 | METAL CHIP | 100 | 5% | 1/10W |
| R645 | 1-216-809-11 | METAL CHIP | 100 | 5% | 1/10W |
| R648 | 1-216-864-11 | SHORT CHIP | 0 | | |
| R650 | 1-216-809-11 | METAL CHIP | 100 | 5% | 1/10W |
| R651 | 1-216-809-11 | METAL CHIP | 100 | 5% | 1/10W |
| R652 | 1-216-809-11 | METAL CHIP | 100 | 5% | 1/10W |
| R654 | 1-216-809-11 | METAL CHIP | 100 | 5% | 1/10W |
| R655 | 1-216-809-11 | METAL CHIP | 100 | 5% | 1/10W |
| R656 | 1-216-809-11 | METAL CHIP | 100 | 5% | 1/10W |
| R657 | 1-216-809-11 | METAL CHIP | 100 | 5% | 1/10W |
| R660 | 1-216-864-11 | SHORT CHIP | 0 | | |
| R661 | 1-216-864-11 | SHORT CHIP | 0 | | |
| R662 | 1-216-809-11 | METAL CHIP | 100 | 5% | 1/10W |
| R663 | 1-216-809-11 | METAL CHIP | 100 | 5% | 1/10W |
| R664 | 1-216-809-11 | METAL CHIP | 100 | 5% | 1/10W |
| R666 | 1-216-809-11 | METAL CHIP | 100 | 5% | 1/10W |
| R667 | 1-216-809-11 | METAL CHIP | 100 | 5% | 1/10W |
| R681 | 1-216-864-11 | SHORT CHIP | 0 (DZ870KW) | | |
| R682 | 1-216-864-11 | SHORT CHIP | 0 (DZ870KW) | | |
| R683 | 1-216-809-11 | METAL CHIP | 100 | 5% | 1/10W |

| Ref. No. | Part No. | Description | | | Remark |
|---|---|---|---|---|---|
| R685 | 1-216-864-11 | SHORT CHIP | 0 | | |
| R686 | 1-216-864-11 | SHORT CHIP | 0 | | |
| R687 | 1-216-864-11 | SHORT CHIP | 0 | | |
| R688 | 1-216-864-11 | SHORT CHIP | 0 | | |
| R689 | 1-216-864-11 | SHORT CHIP | 0 | | |
| R690 | 1-216-809-11 | METAL CHIP | 100 | 5% | 1/10W |
| R698 | 1-216-864-11 | SHORT CHIP | 0 | | |
| R699 | 1-216-864-11 | SHORT CHIP | 0 | | |
| R711 | 1-216-864-11 | SHORT CHIP | 0 | | |
| R713 | 1-216-864-11 | SHORT CHIP | 0 | | |
| R716 | 1-216-813-11 | METAL CHIP | 220 | 5% | 1/10W |
| R717 | 1-216-809-11 | METAL CHIP | 100 | 5% | 1/10W |
| R718 | 1-216-809-11 | METAL CHIP | 100 | 5% | 1/10W |
| R719 | 1-216-809-11 | METAL CHIP | 100 | 5% | 1/10W |
| R721 | 1-216-864-11 | SHORT CHIP | 0 | | |
| R722 | 1-216-809-11 | METAL CHIP | 100 | 5% | 1/10W |
| R723 | 1-216-809-11 | METAL CHIP | 100 | 5% | 1/10W |
| R724 | 1-216-809-11 | METAL CHIP | 100 | 5% | 1/10W |
| R725 | 1-216-805-11 | METAL CHIP | 47 | 5% | 1/10W |
| R726 | 1-216-809-11 | METAL CHIP | 100 | 5% | 1/10W |
| R727 | 1-216-805-11 | METAL CHIP | 47 | 5% | 1/10W |
| R728 | 1-216-864-11 | SHORT CHIP | 0 | | |
| R729 | 1-216-805-11 | METAL CHIP | 47 | 5% | 1/10W |
| R730 | 1-216-809-11 | METAL CHIP | 100 | 5% | 1/10W |
| R731 | 1-216-821-11 | METAL CHIP | 1K | 5% | 1/10W |
| R732 | 1-216-827-11 | METAL CHIP | 3.3K | 5% | 1/10W |
| R733 | 1-216-857-11 | METAL CHIP | 1M | 5% | 1/10W |
| R734 | 1-216-809-11 | METAL CHIP | 100 | 5% | 1/10W |
| R735 | 1-216-809-11 | METAL CHIP | 100 | 5% | 1/10W |
| R736 | 1-216-809-11 | METAL CHIP | 100 | 5% | 1/10W |
| R738 | 1-216-809-11 | METAL CHIP | 100 | 5% | 1/10W |
| R739 | 1-216-809-11 | METAL CHIP | 100 | 5% | 1/10W |
| R740 | 1-216-809-11 | METAL CHIP | 100 | 5% | 1/10W |
| R741 | 1-216-809-11 | METAL CHIP | 100 | 5% | 1/10W |
| R743 | 1-216-809-11 | METAL CHIP | 100 | 5% | 1/10W |
| R751 | 1-216-809-11 | METAL CHIP | 100 | 5% | 1/10W |
| R752 | 1-216-809-11 | METAL CHIP | 100 | 5% | 1/10W |
| R753 | 1-216-809-11 | METAL CHIP | 100 | 5% | 1/10W |
| R754 | 1-216-809-11 | METAL CHIP | 100 | 5% | 1/10W |
| R755 | 1-216-809-11 | METAL CHIP | 100 | 5% | 1/10W |
| R756 | 1-216-809-11 | METAL CHIP | 100 | 5% | 1/10W |
| R757 | 1-216-809-11 | METAL CHIP | 100 | 5% | 1/10W |
| R758 | 1-216-864-11 | SHORT CHIP | 0 | | |
| R759 | 1-216-809-11 | METAL CHIP | 100 | 5% | 1/10W |
| R760 | 1-216-809-11 | METAL CHIP | 100 | 5% | 1/10W |
| R761 | 1-216-809-11 | METAL CHIP | 100 | 5% | 1/10W |
| R762 | 1-216-805-11 | METAL CHIP | 47 | 5% | 1/10W |
| R771 | 1-216-809-11 | METAL CHIP | 100 | 5% | 1/10W |
| R774 | 1-216-864-11 | SHORT CHIP | 0 | | |
| R775 | 1-216-864-11 | SHORT CHIP | 0 | | |
| R776 | 1-216-864-11 | SHORT CHIP | 0 | | |
| R778 | 1-216-864-11 | SHORT CHIP | 0 | | |
| R780 | 1-216-805-11 | METAL CHIP | 47 | 5% | 1/10W |
| R781 | 1-216-805-11 | METAL CHIP | 47 | 5% | 1/10W |
| R787 | 1-216-809-11 | METAL CHIP | 100 | 5% | 1/10W |
| R788 | 1-216-864-11 | SHORT CHIP | 0 | | |
| R790 | 1-216-864-11 | SHORT CHIP | 0 | | |
| R791 | 1-216-864-11 | SHORT CHIP | 0 | | |
| R792 | 1-216-864-11 | SHORT CHIP | 0 | | |
| R793 | 1-216-864-11 | SHORT CHIP | 0 | | |

| Ref. No. | Part No. | Description | | | Remark |
|---|---|---|---|---|---|
| R794 | 1-216-864-11 | SHORT CHIP | 0 | | |
| R795 | 1-216-864-11 | SHORT CHIP | 0 | | |
| R798 | 1-216-864-11 | SHORT CHIP | 0 | | |
| R1101 | 1-216-809-11 | METAL CHIP | 100 | 5% | 1/10W |
| R1102 | 1-216-864-11 | SHORT CHIP | 0 | | |
| R1103 | 1-218-864-11 | METAL CHIP | 5.1K | 0.5% | 1/10W |
| R1105 | 1-216-833-11 | METAL CHIP | 10K | 5% | 1/10W |
| R1106 | 1-216-833-11 | METAL CHIP | 10K | 5% | 1/10W |
| R1107 | 1-216-833-11 | METAL CHIP | 10K | 5% | 1/10W |
| R1108 | 1-216-857-11 | METAL CHIP | 1M | 5% | 1/10W |
| R1109 | 1-216-864-11 | SHORT CHIP | 0 | | |
| R1110 | 1-216-841-11 | METAL CHIP | 47K | 5% | 1/10W |
| R1111 | 1-216-809-11 | METAL CHIP | 100 | 5% | 1/10W |
| R1112 | 1-211-977-11 | METAL CHIP | 22 | 0.5% | 1/10W |
| R1113 | 1-211-977-11 | METAL CHIP | 22 | 0.5% | 1/10W |
| R1114 | 1-216-845-11 | METAL CHIP | 100K | 5% | 1/10W |
| R1115 | 1-211-977-11 | METAL CHIP | 22 | 0.5% | 1/10W |
| R1116 | 1-216-821-11 | METAL CHIP | 1K | 5% | 1/10W |
| R1117 | 1-216-841-11 | METAL CHIP | 47K | 5% | 1/10W |
| R1118 | 1-216-801-11 | METAL CHIP | 22 | 5% | 1/10W |
| R1120 | 1-216-801-11 | METAL CHIP | 22 | 5% | 1/10W |
| R1121 | 1-216-801-11 | METAL CHIP | 22 | 5% | 1/10W |
| R1123 | 1-216-864-11 | SHORT CHIP | 0 | | |
| R1124 | 1-216-841-11 | METAL CHIP | 47K | 5% | 1/10W |
| R1126 | 1-216-833-11 | METAL CHIP | 10K | 5% | 1/10W |
| R1132 | 1-216-845-11 | METAL CHIP | 100K | 5% | 1/10W |
| R1133 | 1-216-864-11 | SHORT CHIP | 0 | | |
| R1134 | 1-216-809-11 | METAL CHIP | 100 | 5% | 1/10W (DZ860W) |
| R1135 | 1-216-821-11 | METAL CHIP | 1K | 5% | 1/10W |
| R1136 | 1-216-835-11 | METAL CHIP | 15K | 5% | 1/10W |
| R1137 | 1-216-864-11 | SHORT CHIP | 0 (DZ870KW/DZ870M) | | |
| R1138 | 1-216-809-11 | METAL CHIP | 100 | 5% | 1/10W (DZ860W) |
| R1139 | 1-216-864-11 | SHORT CHIP | 0 | | |
| R1140 | 1-216-821-11 | METAL CHIP | 1K | 5% | 1/10W |
| R1141 | 1-216-855-11 | METAL CHIP | 680K | 5% | 1/10W |
| R1142 | 1-216-845-11 | METAL CHIP | 100K | 5% | 1/10W |
| R1145 | 1-216-864-11 | SHORT CHIP | 0 | | |
| R1146 | 1-216-805-11 | METAL CHIP | 47 | 5% | 1/10W |
| R1147 | 1-216-864-11 | SHORT CHIP | 0 | | |
| R1148 | 1-216-864-11 | SHORT CHIP | 0 | | |
| R1151 | 1-216-833-11 | METAL CHIP | 10K | 5% | 1/10W |
| R1152 | 1-216-864-11 | SHORT CHIP | 0 | | |
| R1153 | 1-216-864-11 | SHORT CHIP | 0 | | |
| R1154 | 1-216-864-11 | SHORT CHIP | 0 | | |
| R1155 | 1-216-864-11 | SHORT CHIP | 0 | | |
| R1156 | 1-216-809-11 | METAL CHIP | 100 | 5% | 1/10W |
| R1159 | 1-216-805-11 | METAL CHIP | 47 | 5% | 1/10W |
| R1160 | 1-216-805-11 | METAL CHIP | 47 | 5% | 1/10W |
| R1161 | 1-216-805-11 | METAL CHIP | 47 | 5% | 1/10W |
| R1171 | 1-216-809-11 | METAL CHIP | 100 | 5% | 1/10W |
| R1175 | 1-216-864-11 | SHORT CHIP | 0 | | |
| R1176 | 1-216-833-11 | METAL CHIP | 10K | 5% | 1/10W |
| R1181 | 1-216-833-11 | METAL CHIP | 10K | 5% | 1/10W |
| R1182 | 1-216-833-11 | METAL CHIP | 10K | 5% | 1/10W |
| R1183 | 1-216-805-11 | METAL CHIP | 47 | 5% | 1/10W |
| R1184 | 1-216-805-11 | METAL CHIP | 47 | 5% | 1/10W |
| R1185 | 1-216-805-11 | METAL CHIP | 47 | 5% | 1/10W |
| R1191 | 1-216-821-11 | METAL CHIP | 1K | 5% | 1/10W |
| R1193 | 1-216-821-11 | METAL CHIP | 1K | 5% | 1/10W |

| Ref. No. | Part No. | Description | | | Remark |
|---|---|---|---|---|---|
| R1198 | 1-216-809-11 | METAL CHIP | 100 | 5% | 1/10W |
| R1204 | 1-216-822-11 | METAL CHIP | 1.2K | 5% | 1/10W |
| R1205 | 1-216-833-11 | METAL CHIP | 10K | 5% | 1/10W |
| R1206 | 1-216-833-11 | METAL CHIP | 10K | 5% | 1/10W |
| R1207 | 1-216-826-11 | METAL CHIP | 2.7K | 5% | 1/10W |
| R1208 | 1-216-839-11 | METAL CHIP | 33K | 5% | 1/10W |
| R1209 | 1-216-839-11 | METAL CHIP | 33K | 5% | 1/10W |
| R1210 | 1-216-841-11 | METAL CHIP | 47K | 5% | 1/10W |
| R1212 | 1-216-833-11 | METAL CHIP | 10K | 5% | 1/10W |
| R1213 | 1-218-867-11 | METAL CHIP | 6.8K | 0.5% | 1/10W |
| R1214 | 1-216-835-11 | METAL CHIP | 15K | 5% | 1/10W |
| R1215 | 1-216-834-11 | METAL CHIP | 12K | 5% | 1/10W |
| R1216 | 1-216-834-11 | METAL CHIP | 12K | 5% | 1/10W |
| R1219 | 1-216-838-11 | METAL CHIP | 27K | 5% | 1/10W |
| R1220 | 1-216-821-11 | METAL CHIP | 1K | 5% | 1/10W |
| R1221 | 1-218-889-11 | METAL CHIP | 56K | 0.5% | 1/10W |
| R1222 | 1-216-839-11 | METAL CHIP | 33K | 5% | 1/10W |
| R1223 | 1-218-895-11 | METAL CHIP | 100K | 0.5% | 1/10W |
| R1224 | 1-216-833-11 | METAL CHIP | 10K | 5% | 1/10W |
| R1225 | 1-218-895-11 | METAL CHIP | 100K | 0.5% | 1/10W |
| R1226 | 1-218-889-11 | METAL CHIP | 56K | 0.5% | 1/10W |
| R1227 | 1-216-864-11 | SHORT CHIP | 0 | | |
| R1228 | 1-216-864-11 | SHORT CHIP | 0 | | |
| R1230 | 1-218-893-11 | METAL CHIP | 82K | 0.5% | 1/10W |
| R1231 | 1-218-875-11 | METAL CHIP | 15K | 0.5% | 1/10W |
| R1232 | 1-218-877-11 | METAL CHIP | 18K | 0.5% | 1/10W |
| R1233 | 1-218-883-11 | METAL CHIP | 33K | 0.5% | 1/10W |
| R1234 | 1-216-833-11 | METAL CHIP | 10K | 5% | 1/10W |
| R1236 | 1-216-821-11 | METAL CHIP | 1K | 5% | 1/10W |
| R1237 | 1-216-821-11 | METAL CHIP | 1K | 5% | 1/10W |
| R1238 | 1-216-821-11 | METAL CHIP | 1K | 5% | 1/10W |
| R1239 | 1-216-821-11 | METAL CHIP | 1K | 5% | 1/10W |
| R1243 | 1-216-805-11 | METAL CHIP | 47 | 5% | 1/10W |
| R1246 | 1-216-829-11 | METAL CHIP | 4.7K | 5% | 1/10W |
| R1247 | 1-216-821-11 | METAL CHIP | 1K | 5% | 1/10W |
| R1730 | 1-216-826-11 | METAL CHIP | 2.7K | 5% | 1/10W |
| R1742 | 1-216-841-11 | METAL CHIP | 47K | 5% | 1/10W |
| R1743 | 1-216-864-11 | SHORT CHIP | 0 | | |
| R1747 | 1-216-864-11 | SHORT CHIP | 0 | | |
| R1748 | 1-216-864-11 | SHORT CHIP | 0 | | |
| R1749 | 1-216-824-11 | METAL CHIP | 1.8K | 5% | 1/10W |
| R1750 | 1-216-824-11 | METAL CHIP | 1.8K | 5% | 1/10W |
| R1751 | 1-216-864-11 | SHORT CHIP | 0 | | |
| R1752 | 1-216-864-11 | SHORT CHIP | 0 | | |
| R1753 | 1-216-864-11 | SHORT CHIP | 0 | | |
| R1754 | 1-216-864-11 | SHORT CHIP | 0 | | |
| R1781 | 1-216-827-11 | METAL CHIP | 3.3K | 5% | 1/10W |
| R1782 | 1-216-827-11 | METAL CHIP | 3.3K | 5% | 1/10W |
| R1783 | 1-216-864-11 | SHORT CHIP | 0 | | |
| R1784 | 1-216-864-11 | SHORT CHIP | 0 | | |
| R1785 | 1-216-864-11 | SHORT CHIP | 0 | | |
| R1786 | 1-216-864-11 | SHORT CHIP | 0 | | |
| R2101 | 1-218-841-11 | METAL CHIP | 560 | 0.5% | 1/10W |
| R2103 | 1-216-864-11 | SHORT CHIP | 0 (DZ870KW/DZ870M) | | |
| R2104 | 1-216-829-11 | METAL CHIP | 4.7K | 5% | 1/10W |
| R2108 | 1-216-864-11 | SHORT CHIP | 0 | | |
| R2110 | 1-216-826-11 | METAL CHIP | 2.7K | 5% | 1/10W |
| R2111 | 1-216-821-11 | METAL CHIP | 1K | 5% | 1/10W (DZ870KW/DZ870M) |
| R2112 | 1-216-821-11 | METAL CHIP | 1K | 5% | 1/10W (DZ870KW/DZ870M) |

## MAIN

| Ref. No. | Part No. | Description | | | Remark |
|---|---|---|---|---|---|
| R2114 | 1-216-801-11 | METAL CHIP | 22 | 5% | 1/10W |
| R2115 | 1-216-864-11 | SHORT CHIP | 0 | | |
| R2116 | 1-216-864-11 | SHORT CHIP | 0 (DZ870KW/DZ870M) | | |
| R2117 | 1-216-833-11 | METAL CHIP | 10K | 5% | 1/10W (DZ860W/DZ870W) |
| R2119 | 1-216-864-11 | SHORT CHIP | 0 | | |
| R2121 | 1-216-864-11 | SHORT CHIP | 0 | | |
| R2123 | 1-216-864-11 | SHORT CHIP | 0 | | |
| R2127 | 1-216-833-11 | METAL CHIP | 10K | 5% | 1/10W |
| R2128 | 1-216-833-11 | METAL CHIP | 10K | 5% | 1/10W |
| R2129 | 1-216-845-11 | METAL CHIP | 100K | 5% | 1/10W |
| R2133 | 1-216-864-11 | SHORT CHIP | 0 | | |
| R2134 | 1-216-864-11 | SHORT CHIP | 0 | | |
| R2135 | 1-216-805-11 | METAL CHIP | 47 | 5% | 1/10W (DZ870KW/DZ870M) |
| R2137 | 1-216-833-11 | METAL CHIP | 10K | 5% | 1/10W (DZ870KW/DZ870M) |
| R2138 | 1-216-833-11 | METAL CHIP | 10K | 5% | 1/10W (DZ870KW/DZ870M) |
| R2150 | 1-216-827-11 | METAL CHIP | 3.3K | 5% | 1/10W |
| R2151 | 1-216-827-11 | METAL CHIP | 3.3K | 5% | 1/10W |
| R2152 | 1-216-827-11 | METAL CHIP | 3.3K | 5% | 1/10W |
| R2154 | 1-216-833-11 | METAL CHIP | 10K | 5% | 1/10W (DZ860W/DZ870W) |
| R2155 | 1-216-833-11 | METAL CHIP | 10K | 5% | 1/10W |
| R2156 | 1-216-833-11 | METAL CHIP | 10K | 5% | 1/10W |
| R2157 | 1-216-833-11 | METAL CHIP | 10K | 5% | 1/10W |
| R2158 | 1-216-833-11 | METAL CHIP | 10K | 5% | 1/10W |
| R2159 | 1-216-833-11 | METAL CHIP | 10K | 5% | 1/10W |
| R2160 | 1-216-833-11 | METAL CHIP | 10K | 5% | 1/10W |
| R2167 | 1-216-864-11 | SHORT CHIP | 0 | | |
| R2168 | 1-216-815-11 | METAL CHIP | 330 | 5% | 1/10W |
| R2176 | 1-216-864-11 | SHORT CHIP | 0 | | |
| R2177 | 1-216-864-11 | SHORT CHIP | 0 | | |
| R2178 | 1-216-821-11 | METAL CHIP | 1K | 5% | 1/10W |
| R2179 | 1-216-809-11 | METAL CHIP | 100 | 5% | 1/10W |
| R2180 | 1-216-833-11 | METAL CHIP | 10K | 5% | 1/10W |
| R2181 | 1-216-833-11 | METAL CHIP | 10K | 5% | 1/10W |
| R2182 | 1-216-864-11 | SHORT CHIP | 0 | | |
| R2184 | 1-216-809-11 | METAL CHIP | 100 | 5% | 1/10W |
| R2185 | 1-216-809-11 | METAL CHIP | 100 | 5% | 1/10W |
| R2187 | 1-216-805-11 | METAL CHIP | 47 | 5% | 1/10W |
| R2188 | 1-216-864-11 | SHORT CHIP | 0 | | |
| R2189 | 1-216-833-11 | METAL CHIP | 10K | 5% | 1/10W |
| R2191 | 1-245-287-11 | METAL CHIP | 0.1 | 1% | 1W |
| R2192 | 1-218-835-11 | METAL CHIP | 330 | 0.5% | 1/10W |
| R2193 | 1-218-883-11 | METAL CHIP | 33K | 0.5% | 1/10W |
| R2194 | 1-218-883-11 | METAL CHIP | 33K | 0.5% | 1/10W |
| R2195 | 1-216-809-11 | METAL CHIP | 100 | 5% | 1/10W |
| R2201 | 1-216-864-11 | SHORT CHIP | 0 | | |
| R2203 | 1-216-864-11 | SHORT CHIP | 0 | | |
| R2746 | 1-216-864-11 | SHORT CHIP | 0 | | |
| R3001 | 1-216-833-11 | METAL CHIP | 10K | 5% | 1/10W |
| R3002 | 1-216-833-11 | METAL CHIP | 10K | 5% | 1/10W |
| R3003 | 1-216-821-11 | METAL CHIP | 1K | 5% | 1/10W |
| R3004 | 1-216-825-11 | METAL CHIP | 2.2K | 5% | 1/10W |
| R3011 | 1-216-817-11 | METAL CHIP | 470 | 5% | 1/10W |
| R3012 | 1-216-817-11 | METAL CHIP | 470 | 5% | 1/10W |
| R3013 | 1-216-833-11 | METAL CHIP | 10K | 5% | 1/10W |
| R3014 | 1-216-805-11 | METAL CHIP | 47 | 5% | 1/10W |
| R3015 | 1-216-805-11 | METAL CHIP | 47 | 5% | 1/10W |
| R3017 | 1-216-809-11 | METAL CHIP | 100 | 5% | 1/10W |
| R3021 | 1-216-817-11 | METAL CHIP | 470 | 5% | 1/10W (DZ870M) |
| R3022 | 1-216-817-11 | METAL CHIP | 470 | 5% | 1/10W (DZ870M) |
| R3023 | 1-216-805-11 | METAL CHIP | 47 | 5% | 1/10W (DZ870M) |
| R3024 | 1-216-805-11 | METAL CHIP | 47 | 5% | 1/10W (DZ870M) |
| R3026 | 1-216-809-11 | METAL CHIP | 100 | 5% | 1/10W (DZ870M) |
| R3031 | 1-216-817-11 | METAL CHIP | 470 | 5% | 1/10W |
| R3032 | 1-216-817-11 | METAL CHIP | 470 | 5% | 1/10W |
| R3033 | 1-216-833-11 | METAL CHIP | 10K | 5% | 1/10W |
| R3034 | 1-216-805-11 | METAL CHIP | 47 | 5% | 1/10W |
| R3035 | 1-216-805-11 | METAL CHIP | 47 | 5% | 1/10W |
| R3037 | 1-216-809-11 | METAL CHIP | 100 | 5% | 1/10W |
| R3040 | 1-216-864-11 | SHORT CHIP | 0 | | |
| R3041 | 1-216-864-11 | SHORT CHIP | 0 | | |
| R3042 | 1-216-864-11 | SHORT CHIP | 0 | | |
| R3043 | 1-216-864-11 | SHORT CHIP | 0 | | |
| R3044 | 1-216-864-11 | SHORT CHIP | 0 | | |
| R3047 | 1-216-833-11 | METAL CHIP | 10K | 5% | 1/10W |
| R3049 | 1-216-864-11 | SHORT CHIP | 0 | | |
| R3050 | 1-216-864-11 | SHORT CHIP | 0 | | |
| R3051 | 1-216-097-11 | RES-CHIP | 100K | 5% | 1/10W |
| R3052 | 1-216-857-11 | METAL CHIP | 1M | 5% | 1/10W |
| R3053 | 1-216-817-11 | METAL CHIP | 470 | 5% | 1/10W |
| R3054 | 1-216-809-11 | METAL CHIP | 100 | 5% | 1/10W |
| R3055 | 1-216-805-11 | METAL CHIP | 47 | 5% | 1/10W |
| R3056 | 1-216-864-11 | SHORT CHIP | 0 (DZ860W/DZ870KW/DZ870W) | | |
| R3057 | 1-216-805-11 | METAL CHIP | 47 | 5% | 1/10W (DZ870M) |
| R3057 | 1-216-864-11 | SHORT CHIP | 0 (DZ860W/DZ870KW/DZ870W) | | |
| R3058 | 1-216-864-11 | SHORT CHIP | 0 | | |
| R3059 | 1-216-833-11 | METAL CHIP | 10K | 5% | 1/10W |
| R3060 | 1-216-833-11 | METAL CHIP | 10K | 5% | 1/10W |
| R3061 | 1-216-864-11 | SHORT CHIP | 0 | | |
| R3063 | 1-216-821-11 | METAL CHIP | 1K | 5% | 1/10W |
| R3064 | 1-216-821-11 | METAL CHIP | 1K | 5% | 1/10W |
| R3065 | 1-216-809-11 | METAL CHIP | 100 | 5% | 1/10W |
| R3066 | 1-216-809-11 | METAL CHIP | 100 | 5% | 1/10W |
| R3067 | 1-216-809-11 | METAL CHIP | 100 | 5% | 1/10W |
| R3068 | 1-216-809-11 | METAL CHIP | 100 | 5% | 1/10W |
| R3069 | 1-216-809-11 | METAL CHIP | 100 | 5% | 1/10W |
| R3070 | 1-216-809-11 | METAL CHIP | 100 | 5% | 1/10W |
| R3071 | 1-216-809-11 | METAL CHIP | 100 | 5% | 1/10W |
| R3072 | 1-216-809-11 | METAL CHIP | 100 | 5% | 1/10W |
| R3073 | 1-216-809-11 | METAL CHIP | 100 | 5% | 1/10W |
| R3074 | 1-216-805-11 | METAL CHIP | 47 | 5% | 1/10W |
| R3075 | 1-216-805-11 | METAL CHIP | 47 | 5% | 1/10W |
| R3076 | 1-216-805-11 | METAL CHIP | 47 | 5% | 1/10W |
| R3077 | 1-216-809-11 | METAL CHIP | 100 | 5% | 1/10W |
| R3078 | 1-216-809-11 | METAL CHIP | 100 | 5% | 1/10W |
| R3079 | 1-216-809-11 | METAL CHIP | 100 | 5% | 1/10W |
| R3085 | 1-216-839-11 | METAL CHIP | 33K | 5% | 1/10W (DZ860W/DZ870W) |
| R3086 | 1-216-839-11 | METAL CHIP | 33K | 5% | 1/10W (DZ860W/DZ870W) |
| R3087 | 1-216-833-11 | METAL CHIP | 10K | 5% | 1/10W (DZ860W/DZ870W) |

| Ref. No. | Part No. | Description | | | Remark |
|---|---|---|---|---|---|
| R3088 | 1-216-833-11 | METAL CHIP | 10K | 5% | 1/10W (DZ860W/DZ870W) |
| R3089 | 1-216-833-11 | METAL CHIP | 10K | 5% | 1/10W (DZ860W/DZ870W) |
| R3090 | 1-216-833-11 | METAL CHIP | 10K | 5% | 1/10W (DZ860W/DZ870W) |
| R3091 | 1-216-837-11 | METAL CHIP | 22K | 5% | 1/10W (DZ860W/DZ870W) |
| R3092 | 1-216-837-11 | METAL CHIP | 22K | 5% | 1/10W (DZ860W/DZ870W) |
| R3093 | 1-216-837-11 | METAL CHIP | 22K | 5% | 1/10W (DZ860W/DZ870W) |
| R3094 | 1-216-837-11 | METAL CHIP | 22K | 5% | 1/10W (DZ860W/DZ870W) |
| R3095 | 1-216-827-11 | METAL CHIP | 3.3K | 5% | 1/10W (DZ860W/DZ870W) |
| R3096 | 1-216-829-11 | METAL CHIP | 4.7K | 5% | 1/10W (DZ860W/DZ870W) |
| R3097 | 1-216-809-11 | METAL CHIP | 100 | 5% | 1/10W |
| R3098 | 1-216-839-11 | METAL CHIP | 33K | 5% | 1/10W (DZ860W/DZ870W) |
| R3099 | 1-216-839-11 | METAL CHIP | 33K | 5% | 1/10W (DZ860W/DZ870W) |
| R3101 | 1-216-809-11 | METAL CHIP | 100 | 5% | 1/10W |
| R3102 | 1-216-809-11 | METAL CHIP | 100 | 5% | 1/10W |
| R3103 | 1-216-864-11 | SHORT CHIP | 0 | | |
| R3104 | 1-216-864-11 | SHORT CHIP | 0 | | |
| R3107 | 1-216-835-11 | METAL CHIP | 15K | 5% | 1/10W |
| R3115 | 1-216-864-11 | SHORT CHIP | 0 | | |
| R3116 | 1-216-864-11 | SHORT CHIP | 0 | | |
| R3125 | 1-216-845-11 | METAL CHIP | 100K | 5% | 1/10W |
| R3126 | 1-216-845-11 | METAL CHIP | 100K | 5% | 1/10W |
| R3127 | 1-216-845-11 | METAL CHIP | 100K | 5% | 1/10W |
| R3151 | 1-216-809-11 | METAL CHIP | 100 | 5% | 1/10W |
| R3152 | 1-216-809-11 | METAL CHIP | 100 | 5% | 1/10W |
| R3153 | 1-216-864-11 | SHORT CHIP | 0 | | |
| R3154 | 1-216-864-11 | SHORT CHIP | 0 | | |
| R3157 | 1-216-835-11 | METAL CHIP | 15K | 5% | 1/10W |
| R3165 | 1-216-864-11 | SHORT CHIP | 0 | | |
| R3166 | 1-216-864-11 | SHORT CHIP | 0 | | |
| R3175 | 1-216-845-11 | METAL CHIP | 100K | 5% | 1/10W |
| R3176 | 1-216-845-11 | METAL CHIP | 100K | 5% | 1/10W |
| R3177 | 1-216-845-11 | METAL CHIP | 100K | 5% | 1/10W |
| R3201 | 1-216-809-11 | METAL CHIP | 100 | 5% | 1/10W (DZ870M) |
| R3202 | 1-216-809-11 | METAL CHIP | 100 | 5% | 1/10W (DZ870M) |
| R3203 | 1-216-864-11 | SHORT CHIP | 0 (DZ870M) | | |
| R3204 | 1-216-864-11 | SHORT CHIP | 0 (DZ870M) | | |
| R3207 | 1-216-835-11 | METAL CHIP | 15K | 5% | 1/10W (DZ870M) |
| R3215 | 1-216-864-11 | SHORT CHIP | 0 (DZ870M) | | |
| R3216 | 1-216-864-11 | SHORT CHIP | 0 (DZ870M) | | |
| R3225 | 1-216-845-11 | METAL CHIP | 100K | 5% | 1/10W (DZ870M) |
| R3226 | 1-216-845-11 | METAL CHIP | 100K | 5% | 1/10W (DZ870M) |
| R3227 | 1-216-845-11 | METAL CHIP | 100K | 5% | 1/10W (DZ870M) |
| R3251 | 1-216-809-11 | METAL CHIP | 100 | 5% | 1/10W (DZ870M) |
| R3252 | 1-216-809-11 | METAL CHIP | 100 | 5% | 1/10W (DZ870M) |
| R3253 | 1-216-864-11 | SHORT CHIP | 0 (DZ870M) | | |
| R3254 | 1-216-864-11 | SHORT CHIP | 0 (DZ870M) | | |
| R3257 | 1-216-835-11 | METAL CHIP | 15K | 5% | 1/10W (DZ870M) |
| R3265 | 1-216-864-11 | SHORT CHIP | 0 (DZ870M) | | |
| R3266 | 1-216-864-11 | SHORT CHIP | 0 (DZ870M) | | |
| R3275 | 1-216-845-11 | METAL CHIP | 100K | 5% | 1/10W |
| R3276 | 1-216-845-11 | METAL CHIP | 100K | 5% | 1/10W |
| R3277 | 1-216-845-11 | METAL CHIP | 100K | 5% | 1/10W |
| R3301 | 1-216-809-11 | METAL CHIP | 100 | 5% | 1/10W |
| R3302 | 1-216-809-11 | METAL CHIP | 100 | 5% | 1/10W |
| R3303 | 1-216-864-11 | SHORT CHIP | 0 | | |
| R3304 | 1-216-864-11 | SHORT CHIP | 0 | | |
| R3307 | 1-216-835-11 | METAL CHIP | 15K | 5% | 1/10W |
| R3315 | 1-216-864-11 | SHORT CHIP | 0 | | |
| R3316 | 1-216-864-11 | SHORT CHIP | 0 | | |
| R3325 | 1-216-845-11 | METAL CHIP | 100K | 5% | 1/10W |
| R3326 | 1-216-845-11 | METAL CHIP | 100K | 5% | 1/10W |
| R3327 | 1-216-845-11 | METAL CHIP | 100K | 5% | 1/10W |
| R3401 | 1-216-809-11 | METAL CHIP | 100 | 5% | 1/10W |
| R3402 | 1-216-809-11 | METAL CHIP | 100 | 5% | 1/10W |
| R3403 | 1-216-864-11 | SHORT CHIP | 0 | | |
| R3404 | 1-216-864-11 | SHORT CHIP | 0 | | |
| R3407 | 1-216-835-11 | METAL CHIP | 15K | 5% | 1/10W |
| R3415 | 1-216-864-11 | SHORT CHIP | 0 | | |
| R3416 | 1-216-864-11 | SHORT CHIP | 0 | | |
| R3425 | 1-216-845-11 | METAL CHIP | 100K | 5% | 1/10W (DZ870M) |
| R3426 | 1-216-845-11 | METAL CHIP | 100K | 5% | 1/10W (DZ870M) |
| R3427 | 1-216-845-11 | METAL CHIP | 100K | 5% | 1/10W (DZ870M) |
| R3501 | 1-216-809-11 | METAL CHIP | 100 | 5% | 1/10W |
| R3502 | 1-216-809-11 | METAL CHIP | 100 | 5% | 1/10W |
| R3503 | 1-216-864-11 | SHORT CHIP | 0 | | |
| R3504 | 1-216-864-11 | SHORT CHIP | 0 | | |
| R3507 | 1-216-835-11 | METAL CHIP | 15K | 5% | 1/10W |
| R3515 | 1-216-864-11 | SHORT CHIP | 0 | | |
| R3516 | 1-216-864-11 | SHORT CHIP | 0 | | |
| R3551 | 1-216-845-11 | METAL CHIP | 100K | 5% | 1/10W |
| R3552 | 1-216-837-11 | METAL CHIP | 22K | 5% | 1/10W |
| R3553 | 1-216-833-11 | METAL CHIP | 10K | 5% | 1/10W |
| R3554 | 1-216-845-11 | METAL CHIP | 100K | 5% | 1/10W |
| R3555 | 1-216-864-11 | SHORT CHIP | 0 | | |
| R3556 | 1-216-829-11 | METAL CHIP | 4.7K | 5% | 1/10W |
| R3558 | 1-216-833-11 | METAL CHIP | 10K | 5% | 1/10W |
| R3559 | 1-216-833-11 | METAL CHIP | 10K | 5% | 1/10W |
| R3560 | 1-216-864-11 | SHORT CHIP | 0 | | |
| R3561 | 1-216-841-11 | METAL CHIP | 47K | 5% | 1/10W |
| R3562 | 1-216-833-11 | METAL CHIP | 10K | 5% | 1/10W |
| R3563 | 1-216-845-11 | METAL CHIP | 100K | 5% | 1/10W |
| R3901 | 1-216-296-11 | SHORT CHIP | 0 | | |
| R3902 | 1-216-296-11 | SHORT CHIP | 0 | | |
| R3905 | 1-216-296-11 | SHORT CHIP | 0 | | |
| R3906 | 1-216-296-11 | SHORT CHIP | 0 | | |
| R3907 | 1-216-864-11 | SHORT CHIP | 0 | | |
| R3911 | 1-216-864-11 | SHORT CHIP | 0 | | |
| R3912 | 1-216-864-11 | SHORT CHIP | 0 | | |
| R3913 | 1-216-864-11 | SHORT CHIP | 0 | | |
| R3914 | 1-216-864-11 | SHORT CHIP | 0 | | |
| R3917 | 1-216-864-11 | SHORT CHIP | 0 | | |
| R3918 | 1-216-864-11 | SHORT CHIP | 0 | | |

| Ref. No. | Part No. | Description | | | Remark |
|---|---|---|---|---|---|
| R3919 | 1-216-864-11 | SHORT CHIP | 0 | | |
| R3920 | 1-216-864-11 | SHORT CHIP | 0 | | |
| R3921 | 1-216-864-11 | SHORT CHIP | 0 | | |
| R4503 | 1-216-864-11 | SHORT CHIP | 0 | | |
| R4504 | 1-216-864-11 | SHORT CHIP | 0 | | |
| R4505 | 1-216-864-11 | SHORT CHIP | 0 | | |
| R4506 | 1-216-864-11 | SHORT CHIP | 0 | | |
| R4507 | 1-216-864-11 | SHORT CHIP | 0 | | |
| R4508 | 1-216-864-11 | SHORT CHIP | 0 | | |
| R4716 | 1-216-864-11 | SHORT CHIP | 0 (DZ870KW/DZ870M/DZ870W) | | |
| R4717 | 1-216-864-11 | SHORT CHIP | 0 (DZ870KW/DZ870M/DZ870W) | | |
| R4718 | 1-216-864-11 | SHORT CHIP | 0 | | |
| R4719 | 1-216-864-11 | SHORT CHIP | 0 | | |
| R4721 | 1-216-864-11 | SHORT CHIP | 0 | | |
| R9918 | 1-216-821-11 | METAL CHIP | 1K | 5% | 1/10W |
| R9920 | 1-216-864-11 | SHORT CHIP | 0 | | |
| R9922 | 1-216-833-11 | METAL CHIP | 10K | 5% | 1/10W |
| R9924 | 1-216-821-11 | METAL CHIP | 1K | 5% | 1/10W |
| R9928 | 1-216-837-11 | METAL CHIP | 22K | 5% | 1/10W |
| R9929 | 1-216-837-11 | METAL CHIP | 22K | 5% | 1/10W |
| R9934 | 1-216-833-11 | METAL CHIP | 10K | 5% | 1/10W |
| R9935 | 1-216-864-11 | SHORT CHIP | 0 | | |
| R9941 | 1-216-838-11 | METAL CHIP | 27K | 5% | 1/10W |
| R9945 | 1-216-813-11 | METAL CHIP | 220 | 5% | 1/10W |
| | | < NETWORK RESISTOR > | | | |
| RB1103 | 1-234-400-21 | CONDUCTOR, NETWORK 0X4 (1005) | | | |
| RB1104 | 1-234-400-21 | CONDUCTOR, NETWORK 0X4 (1005) | | | |
| RB1105 | 1-234-944-21 | RES, NETWORK 47X4 (1005) | | | |
| RB1106 | 1-234-944-21 | RES, NETWORK 47X4 (1005) | | | |
| RB1107 | 1-234-944-21 | RES, NETWORK 47X4 (1005) | | | |
| RB1108 | 1-234-944-21 | RES, NETWORK 47X4 (1005) | | | |
| RB1109 | 1-234-400-21 | CONDUCTOR, NETWORK 0X4 (1005) | | | |
| RB1110 | 1-234-400-21 | CONDUCTOR, NETWORK 0X4 (1005) | | | |
| RB1111 | 1-234-400-21 | CONDUCTOR, NETWORK 0X4 (1005) | | | |
| RB1112 | 1-234-400-21 | CONDUCTOR, NETWORK 0X4 (1005) | | | |
| RB1113 | 1-234-400-21 | CONDUCTOR, NETWORK 0X4 (1005) | | | |
| RB1114 | 1-234-400-21 | CONDUCTOR, NETWORK 0X4 (1005) | | | |
| RB1115 | 1-234-400-21 | CONDUCTOR, NETWORK 0X4 (1005) | | | |
| | | < TERMINAL BOARD > | | | |
| TB3901 | 1-780-453-11 | TERMINAL BOARD (SPEAKER) 2P (SPEAKER CENTER/SUBWOOFER) | | | |
| | | < VIBRATOR > | | | |
| X501 | 1-795-058-21 | VIBRATOR, CERAMIC (5MHz) | | | |
| X701 | 1-795-843-11 | VIBRATOR, CRYSTAL (12.288MHz) | | | |
| X1101 | 1-795-630-11 | VIBRATOR, CRYSTAL (27MHz) | | | |
| X3051 | 1-795-660-21 | QUARTZ CRYSTAL UNIT (49.1MHz) | | | |
| ********** | | | | | |
| | | MS-203 BOARD | | | |
| | | ********** | | | |
| | | < CONNECTOR > | | | |
| CN001 | 1-815-412-11 | CONNECTOR, FFC/FPC 5P | | | |
| | | < SWITCH > | | | |
| S001 | 1-786-693-11 | SWITCH, DETECTION (CHUCK/TRAY DETECT) | | | |
| ********** | | | | | |

| Ref. No. | Part No. | Description | | | Remark |
|---|---|---|---|---|---|
| | A-1382-402-A | POWER BOARD, COMPLETE (DZ860W) | | | |
| | A-1392-694-A | POWER BOARD, COMPLETE (DZ870KW:SP/DZ870M/DZ870W:E3,E15,AUS,EA,KR) | | | |
| | A-1392-696-A | POWER BOARD, COMPLETE (DZ870W:TW) | | | |
| | A-1452-054-A | POWER BOARD, COMPLETE (DZ870W:MX) | | | |
| | A-1452-056-A | POWER BOARD, COMPLETE (DZ870W:E32) | | | |
| | A-1519-582-A | POWER BOARD, COMPLETE (DZ870KW:TH) | | | |
| | | ********** | | | |
| | 1-533-217-41 | HOLDER, FUSE | | | |
| | 7-685-646-79 | SCREW +BVTP 3X8 TYPE2 IT-3 | | | |
| | 7-685-647-79 | SCREW +BVTP 3X10 TYPE2 IT-3 | | | |
| | | < CAPACITOR > | | | |
| ⚠ C901 | 1-165-529-11 | MYLAR | 0.22uF | 10% | 275V |
| ⚠ C902 | 1-165-529-11 | MYLAR | 0.22uF | 10% | 275V |
| ⚠ C903 | 1-112-330-11 | ELECT(BLOCK) | 1000uF | 20% | 200V (DZ870W:TW) |
| ⚠ C903 | 1-112-331-11 | ELECT(BLOCK) | 1000uF | 20% | 250V (DZ870W:MX) |
| ⚠ C903 | 1-112-333-11 | ELECT(BLOCK) | 330uF | 20% | 450V (DZ870KW/DZ870M/DZ870W:EXCEPT MX,TW) |
| ⚠ C903 | 1-114-346-11 | ELECT(BLOCK) | 330uF | 20% | 400V (DZ860W) |
| ⚠ C905 | 1-112-334-11 | FILM | 0.01uF | 5% | 400V (DZ870W:MX,TW) |
| ⚠ C905 | 1-112-335-11 | FILM | 0.0033uF | 5% | 400V (EXCEPT DZ870W:MX,TW) |
| ⚠ C906 | 1-117-815-11 | FILM | 0.001uF | 3% | 1.5KV (EXCEPT DZ870W:MX,TW) |
| C907 | 1-162-964-11 | CERAMIC CHIP | 0.001uF | 10% | 50V (EXCEPT DZ870W:MX,TW) |
| C907 | 1-162-965-11 | CERAMIC CHIP | 0.0015uF | 10% | 50V (DZ870W:MX,TW) |
| C908 | 1-104-962-11 | ELECT | 47uF | 20% | 35V |
| C909 | 1-162-960-11 | CERAMIC CHIP | 220PF | 10% | 50V |
| C910 | 1-107-906-11 | ELECT | 10uF | 20% | 50V (DZ870W:MX,TW) |
| C910 | 1-107-907-11 | ELECT | 22uF | 20% | 50V (EXCEPT DZ870W:E32,MX,TW) |
| C910 | 1-126-967-11 | ELECT | 47uF | 20% | 50V (DZ870W:E32) |
| C911 | 1-162-968-11 | CERAMIC CHIP | 0.0047uF | 10% | 50V |
| C912 | 1-126-947-11 | ELECT | 47uF | 20% | 35V |
| ⚠ C913 | 1-112-866-51 | CERAMIC | 100PF | 10% | 250V |
| C916 | 1-100-566-11 | CERAMIC CHIP | 0.1uF | 10% | 25V |
| ⚠ C918 | 1-112-887-51 | CERAMIC | 0.01uF | 20% | 250V |
| ⚠ C920 | 1-112-887-51 | CERAMIC | 0.01uF | 20% | 250V |
| ⚠ C921 | 1-117-220-81 | CERAMIC | 150PF | 5% | 2KV |
| C922 | 1-162-964-11 | CERAMIC CHIP | 0.001uF | 10% | 50V |
| C923 | 1-162-966-11 | CERAMIC CHIP | 0.0022uF | 10% | 50V |
| ⚠ C924 | 1-112-335-11 | FILM | 0.0033uF | 5% | 400V |
| ⚠ C925 | 1-107-974-81 | CERAMIC | 47PF | 5% | 2KV |
| ⚠ C926 | 1-128-560-11 | ELECT | 22uF | 20% | 100V |
| C927 | 1-128-947-31 | ELECT | 3300uF | 20% | 10V |
| C928 | 1-137-947-21 | ELECT | 2700uF | 20% | 16V |
| C929 | 1-128-954-11 | ELECT | 1000uF | 20% | 25V |
| ⚠ C930 | 1-112-866-51 | CERAMIC | 100PF | 10% | 250V |
| C932 | 1-100-924-21 | ELECT | 2200uF | 20% | 35V |
| C933 | 1-100-924-21 | ELECT | 2200uF | 20% | 35V |
| C934 | 1-112-831-11 | ELECT | 2200uF | 20% | 35V |
| C935 | 1-163-021-11 | CERAMIC CHIP | 0.01uF | 10% | 50V |
| C936 | 1-163-021-11 | CERAMIC CHIP | 0.01uF | 10% | 50V |

| Ref. No. | Part No. | Description | | | Remark |
|---|---|---|---|---|---|
| C937 | 1-100-756-11 | CERAMIC CHIP | 0.047uF | | 50V |
| ⚠ C938 | 1-112-869-51 | CERAMIC | 470PF | 10% | 250V |
| C939 | 1-136-165-00 | FILM | 0.1uF | 5% | 50V |
| C940 | 1-128-950-31 | ELECT | 1000uF | 20% | 16V |
| C942 | 1-126-941-11 | ELECT | 470uF | 20% | 25V |
| C943 | 1-126-934-11 | ELECT | 220uF | 20% | 16V |
| C945 | 1-126-935-11 | ELECT | 470uF | 20% | 16V |
| C948 | 1-126-925-11 | ELECT | 470uF | 20% | 10V |
| C950 | 1-107-826-11 | CERAMIC CHIP | 0.1uF | 10% | 16V |
| C951 | 1-100-566-11 | CERAMIC CHIP | 0.1uF | 10% | 25V |
| ⚠ C963 | 1-112-869-51 | CERAMIC | 470PF | 10% | 250V (EXCEPT DZ870W:MX,TW) |
| ⚠ C963 | 1-112-871-51 | CERAMIC | 0.0022uF | 20% | 250V (DZ870W:MX,TW) |
| ⚠ C964 | 1-112-869-51 | CERAMIC | 470PF | 10% | 250V (EXCEPT DZ870W:MX,TW) |
| ⚠ C964 | 1-112-871-51 | CERAMIC | 0.0022uF | 20% | 250V (DZ870W:MX,TW) |
| C969 | 1-100-566-11 | CERAMIC CHIP | 0.1uF | 10% | 25V |
| C970 | 1-100-566-11 | CERAMIC CHIP | 0.1uF | 10% | 25V |
| C971 | 1-162-970-11 | CERAMIC CHIP | 0.01uF | 10% | 25V |
| C975 | 1-100-566-11 | CERAMIC CHIP | 0.1uF | 10% | 25V |
| C976 | 1-126-933-11 | ELECT | 100uF | 20% | 16V |
| ⚠ C980 | 1-117-828-11 | FILM | 0.0033uF | 3% | 1.5KV (DZ870W:MX,TW) |
| C983 | 1-104-760-11 | CERAMIC CHIP | 0.047uF | 10% | 50V |
| C984 | 1-162-970-11 | CERAMIC CHIP | 0.01uF | 10% | 25V |
| C987 | 1-100-566-11 | CERAMIC CHIP | 0.1uF | 10% | 25V |
| C990 | 1-100-566-11 | CERAMIC CHIP | 0.1uF | 10% | 25V |
| C991 | 1-100-566-11 | CERAMIC CHIP | 0.1uF | 10% | 25V |
| C992 | 1-162-970-11 | CERAMIC CHIP | 0.01uF | 10% | 25V |
| C993 | 1-100-566-11 | CERAMIC CHIP | 0.1uF | 10% | 25V |
| ⚠ C994 | 1-112-869-51 | CERAMIC | 470PF | 10% | 250V (DZ870W:E32) |
| C995 | 1-107-826-11 | CERAMIC CHIP | 0.1uF | 10% | 16V |
| C996 | 1-165-989-11 | CERAMIC CHIP | 10uF | 10% | 6.3V |
| C997 | 1-115-339-11 | CERAMIC CHIP | 0.1uF | 10% | 50V |
| | | < CONNECTOR > | | | |
| CN901 | 1-564-321-00 | PIN, CONNECTOR (3.96mm PITCH) 2P | | | |
| CN904 | 1-785-102-11 | PIN, CONNECTOR (3.96mm PITCH) 4P | | | |
| * CN906 | 1-564-715-11 | PIN, CONNECTOR (SMALL TYPE) 13P | | | |
| CN908 | 1-564-505-11 | PLUG, CONNECTOR 2P | | | |
| | | < DIODE > | | | |
| D901 | 8-719-082-57 | DIODE D5SBA60F01 | | | |
| D902 | 8-719-063-74 | DIODE D1NL20U-TR2 | | | |
| ⚠ D903 | 6-500-241-01 | DIODE SARS03 | | | |
| D905 | 8-719-063-74 | DIODE D1NL20U-TR2 | | | |
| D906 | 6-501-817-01 | DIODE MA2J1110GLS0 | | | |
| D907 | 6-501-817-01 | DIODE MA2J1110GLS0 | | | |
| D908 | 6-501-817-01 | DIODE MA2J1110GLS0 | | | |
| D909 | 6-501-817-01 | DIODE MA2J1110GLS0 | | | |
| D910 | 6-501-817-01 | DIODE MA2J1110GLS0 | | | |
| D911 | 8-719-510-12 | DIODE D10SC4M | | | |
| D912 | 8-719-510-41 | DIODE D10SC9M | | | |
| D913 | 6-500-241-01 | DIODE SARS03 | | | |
| D914 | 6-501-817-01 | DIODE MA2J1110GLS0 | | | |
| D916 | 6-501-412-01 | DIODE SF5S6 | | | |
| D921 | 6-502-234-01 | DIODE EG01CLF-F7 | | | |
| D922 | 6-501-817-01 | DIODE MA2J1110GLS0 | | | |

| Ref. No. | Part No. | Description | Remark |
|---|---|---|---|
| D923 | 6-501-817-01 | DIODE MA2J1110GLS0 | |
| D924 | 6-501-817-01 | DIODE MA2J1110GLS0 | |
| D931 | 6-501-849-01 | DIODE FMX-22SL | |
| D941 | 6-501-817-01 | DIODE MA2J1110GLS0 | |
| D947 | 6-501-412-01 | DIODE SF5S6 | |
| D948 | 6-501-817-01 | DIODE MA2J1110GLS0 | |
| D949 | 6-501-817-01 | DIODE MA2J1110GLS0 | |
| DZ901 | 6-501-782-01 | DIODE MAZ8180GMLS0 | |
| DZ902 | 6-502-231-01 | DIODE MAZ8220GLLSO | |
| DZ903 | 6-501-768-01 | DIODE MAZ8120GMLS0 | |
| DZ904 | 6-501-734-01 | DIODE MAZ8056GMLS0 | |
| DZ915 | 6-501-760-01 | DIODE MAZ8100GMLS0 | |
| DZ932 | 6-501-734-01 | DIODE MAZ8056GMLS0 | |
| DZ953 | 6-501-713-01 | DIODE MAZ8033G0LS0 | |
| | | < FUSE > | |
| ⚠ F945 | 1-576-794-11 | FUSE, MICRO (1608) 2A | |
| | | < RESISTOR > | |
| ⚠ FR929 | 1-246-373-11 | FUSIBLE 1 10% 1/2W F | |
| | | < IC > | |
| IC901 | 6-707-741-01 | IC STR-F6138-LF1352 (DZ870W:MX,TW) | |
| IC901 | 6-707-742-01 | IC STR-F6168-LF1352 (EXCEPT DZ870W:MX,TW) | |
| IC921 | 6-711-790-01 | IC MR4020-7103 | |
| IC922 | 6-707-743-01 | IC TA76L431S(TPE6,Q) | |
| IC931 | 8-759-648-34 | IC TA76431AS(TPE6) | |
| IC941 | 6-712-613-01 | IC SI-3010KM-TLS | |
| | | < COIL > | |
| L931 | 1-457-438-11 | COIL, CHOKE 5.6uH | |
| L944 | 1-414-398-11 | INDUCTOR 10uH | |
| L945 | 1-414-398-11 | INDUCTOR 10uH | |
| L947 | 1-414-398-11 | INDUCTOR 10uH | |
| L948 | 1-414-398-11 | INDUCTOR 10uH | |
| L953 | 1-414-398-11 | INDUCTOR 10uH | |
| L954 | 1-457-578-11 | COIL, CHOKE 10uH | |
| L956 | 1-457-578-11 | COIL, CHOKE 10uH | |
| | | < LINE FILTER > | |
| ⚠ LF901 | 1-457-054-21 | COIL, LINE FILTER (EXCEPT DZ870W:E32,MX,TW) | |
| ⚠ LF901 | 1-457-449-11 | COIL, LINE FILTER (DZ870W:E32,MX,TW) | |
| ⚠ LF902 | 1-457-054-21 | COIL, LINE FILTER (EXCEPT DZ870W:E32,MX,TW) | |
| ⚠ LF902 | 1-457-449-11 | COIL, LINE FILTER (DZ870W:E32,MX,TW) | |
| | | < PHOTO COUPLER > | |
| PC901 | 6-600-438-01 | PHOTO COUPLER TLP421F(D4-GRJ) | |
| PC902 | 6-600-438-01 | PHOTO COUPLER TLP421F(D4-GRJ) | |
| PC903 | 6-600-276-01 | PHOTO COUPLER PS2561AL1-1-V-W | |
| PC904 | 6-600-276-01 | PHOTO COUPLER PS2561AL1-1-V-W | |
| | | < THERMISTOR (POSITIVE) > | |
| ⚠ PS954 | 1-802-595-11 | THERMISTOR, POSITIVE MF-R250 | |
| ⚠ PS956 | 1-802-596-11 | THERMISTOR, POSITIVE MF-R300 | |
| | | < TRANSISTOR > | |
| Q901 | 8-729-201-53 | TRANSISTOR 2SA1015-GR | |

**POWER** **P-SW** **S-AIR-CON**

| Ref. No. | Part No. | Description | | | | Remark |
|---|---|---|---|---|---|---|
| Q921 | 8-729-620-07 | TRANSISTOR 2SC3052EF-T1-LEF | | | | |
| Q922 | 6-550-702-01 | TRANSISTOR 2SC3243-TP-E | | | | |
| Q930 | 8-729-620-07 | TRANSISTOR 2SC3052EF-T1-LEF | | | | |
| Q931 | 8-729-620-07 | TRANSISTOR 2SC3052EF-T1-LEF | | | | |
| Q932 | 8-729-038-28 | TRANSISTOR RT1N441C-TP-1 | | | | |
| Q943 | 8-729-038-28 | TRANSISTOR RT1N441C-TP-1 | | | | |
| Q945 | 6-550-718-01 | FET RSR025N03TL | | | | |
| Q947 | 8-729-038-28 | TRANSISTOR RT1N441C-TP-1 | | | | |
| Q949 | 8-729-620-07 | TRANSISTOR 2SC3052EF-T1-LEF | | | | |
| Q950 | 8-729-038-28 | TRANSISTOR RT1N441C-TP-1 | | | | |
| | | < RESISTOR > | | | | |
| ⚠ R901 | 1-219-759-11 | METAL | 1M | 5% | 1/2W | F (DZ870W:MX,TW) |
| ⚠ R901 | 1-240-938-11 | METAL | 1.5M | 5% | 1/2W | F (EXCEPT DZ870W:MX,TW) |
| ⚠ R903 | 1-215-926-00 | METAL OXIDE | 33K | 5% | 3W | F (DZ870W:MX,TW) |
| ⚠ R903 | 1-215-929-11 | METAL OXIDE | 100K | 5% | 3W | F (EXCEPT DZ870W:MX,TW) |
| ⚠ R904 | 1-215-926-00 | METAL OXIDE | 33K | 5% | 3W | F (DZ870W:MX,TW) |
| ⚠ R904 | 1-215-929-11 | METAL OXIDE | 100K | 5% | 3W | F (EXCEPT DZ870W:MX,TW) |
| R905 | 1-216-797-11 | METAL CHIP | 10 | 5% | 1/10W | |
| R906 | 1-216-827-11 | METAL CHIP | 3.3K | 5% | 1/10W | |
| R907 | 1-216-833-11 | METAL CHIP | 10K | 5% | 1/10W | |
| R908 | 1-216-829-11 | METAL CHIP | 4.7K | 5% | 1/10W | |
| R909 | 1-216-845-11 | METAL CHIP | 100K | 5% | 1/10W | |
| R910 | 1-216-825-11 | METAL CHIP | 2.2K | 5% | 1/10W | |
| R911 | 1-216-813-11 | METAL CHIP | 220 | 5% | 1/10W | |
| ⚠ R912 | 1-216-361-61 | METAL OXIDE | 0.22 | 5% | 2W | F (DZ870W:MX,TW) |
| ⚠ R912 | 1-216-363-00 | METAL OXIDE | 0.33 | 5% | 2W | F (EXCEPT DZ870W:MX,TW) |
| ⚠ R913 | 1-216-361-61 | METAL OXIDE | 0.22 | 5% | 2W | F (DZ870W:MX,TW) |
| ⚠ R914 | 1-220-891-11 | METAL | 0.1 | 10% | 5W | F (EXCEPT DZ870W:MX,TW) |
| ⚠ R914 | 1-243-669-11 | METAL | 0.05 | 5% | 5W | F (DZ870W:MX,TW) |
| ⚠ R916 | 1-215-929-11 | METAL OXIDE | 100K | 5% | 3W | F |
| R917 | 1-216-829-11 | METAL CHIP | 4.7K | 5% | 1/10W | |
| R919 | 1-216-837-11 | METAL CHIP | 22K | 5% | 1/10W | |
| R920 | 1-216-821-11 | METAL CHIP | 1K | 5% | 1/10W | |
| R921 | 1-216-833-11 | METAL CHIP | 10K | 5% | 1/10W | |
| ⚠ R922 | 1-244-317-71 | METAL | 0.18 | 5% | 2W | F |
| R923 | 1-218-879-11 | METAL CHIP | 22K | 0.5% | 1/10W | |
| R924 | 1-216-837-11 | METAL CHIP | 22K | 5% | 1/10W | |
| R925 | 1-216-797-11 | METAL CHIP | 10 | 5% | 1/10W | |
| R926 | 1-218-895-11 | METAL CHIP | 100K | 0.5% | 1/10W | |
| R927 | 1-216-837-11 | METAL CHIP | 22K | 5% | 1/10W | |
| R928 | 1-216-845-11 | METAL CHIP | 100K | 5% | 1/10W | |
| R930 | 1-216-817-11 | METAL CHIP | 470 | 5% | 1/10W | |
| R931 | 1-218-847-11 | METAL CHIP | 1K | 0.5% | 1/10W | |
| R932 | 1-218-879-11 | METAL CHIP | 22K | 0.5% | 1/10W | |
| R933 | 1-216-829-11 | METAL CHIP | 4.7K | 5% | 1/10W | |
| R934 | 1-216-821-11 | METAL CHIP | 1K | 5% | 1/10W | |
| R935 | 1-216-821-11 | METAL CHIP | 1K | 5% | 1/10W | |
| R936 | 1-216-853-11 | METAL CHIP | 470K | 5% | 1/10W | |
| R937 | 1-218-871-11 | METAL CHIP | 10K | 0.5% | 1/10W | |
| R938 | 1-218-847-11 | METAL CHIP | 1K | 0.5% | 1/10W | |
| R939 | 1-218-855-11 | METAL CHIP | 2.2K | 0.5% | 1/10W | |
| R940 | 1-218-871-11 | METAL CHIP | 10K | 0.5% | 1/10W | |
| R941 | 1-218-895-11 | METAL CHIP | 100K | 0.5% | 1/10W | |
| R942 | 1-218-871-11 | METAL CHIP | 10K | 0.5% | 1/10W | |
| R945 | 1-216-837-11 | METAL CHIP | 22K | 5% | 1/10W | |
| R946 | 1-216-827-11 | METAL CHIP | 3.3K | 5% | 1/10W | |
| R949 | 1-216-809-11 | METAL CHIP | 100 | 5% | 1/10W | |
| R951 | 1-218-847-11 | METAL CHIP | 1K | 0.5% | 1/10W | |
| R952 | 1-216-821-11 | METAL CHIP | 1K | 5% | 1/10W | |
| R954 | 1-218-861-11 | METAL CHIP | 3.9K | 0.5% | 1/10W | |
| R955 | 1-216-821-11 | METAL CHIP | 1K | 5% | 1/10W | |
| R956 | 1-216-817-11 | METAL CHIP | 470 | 5% | 1/10W | |
| R957 | 1-216-841-11 | METAL CHIP | 47K | 5% | 1/10W | |
| R958 | 1-216-821-11 | METAL CHIP | 1K | 5% | 1/10W | |
| R959 | 1-218-871-11 | METAL CHIP | 10K | 0.5% | 1/10W | |
| R960 | 1-216-817-11 | METAL CHIP | 470 | 5% | 1/10W | |
| R963 | 1-218-839-11 | METAL CHIP | 470 | 0.5% | 1/10W | |
| R965 | 1-218-863-11 | METAL CHIP | 4.7K | 0.5% | 1/10W | |
| R966 | 1-216-821-11 | METAL CHIP | 1K | 5% | 1/10W | |
| R967 | 1-216-821-11 | METAL CHIP | 1K | 5% | 1/10W | |
| R972 | 1-218-871-11 | METAL CHIP | 10K | 0.5% | 1/10W | |
| R974 | 1-216-827-11 | METAL CHIP | 3.3K | 5% | 1/10W | |
| R975 | 1-218-895-11 | METAL CHIP | 100K | 0.5% | 1/10W | |
| R976 | 1-218-903-11 | METAL CHIP | 220K | 0.5% | 1/10W | |
| R978 | 1-216-829-11 | METAL CHIP | 4.7K | 5% | 1/10W | |
| R992 | 1-216-793-11 | METAL CHIP | 4.7 | 5% | 1/10W | |
| R993 | 1-216-833-11 | METAL CHIP | 10K | 5% | 1/10W | |
| R994 | 1-216-851-11 | METAL CHIP | 330K | 5% | 1/10W | |
| R995 | 1-216-845-11 | METAL CHIP | 100K | 5% | 1/10W | |
| R998 | 1-218-855-11 | METAL CHIP | 2.2K | 0.5% | 1/10W | |
| R999 | 1-218-871-11 | METAL CHIP | 10K | 0.5% | 1/10W | |
| | | < TRANSFORMER > | | | | |
| ⚠ T901 | 1-443-649-11 | TRANSFORMER, CONVERTER (DZ870W:MX,TW) | | | | |
| ⚠ T901 | 1-443-874-11 | TRANSFORMER, CONVERTER (EXCEPT DZ870W:MX,TW) | | | | |
| ⚠ T903 | 1-445-320-11 | TRANSFORMER, CONVERTER | | | | |
| | | < THERMISTOR > | | | | |
| ⚠ TH901 | 1-805-841-21 | THERMISTOR, NTC 3.0 (DZ870W:E32,MX,TW) | | | | |
| ⚠ TH901 | 1-805-842-21 | THERMISTOR, NTC 6.0 (EXCEPT DZ870W:E32,MX,TW) | | | | |
| | | < VARISTOR > | | | | |
| ⚠ VDR901 | 1-805-482-11 | VARISTOR | | | | |
| ********** | | | | | | |
| | | P-SW BOARD | | | | |
| | | ********** | | | | |
| | | < CAPACITOR > | | | | |
| C170 | 1-162-927-11 | CERAMIC CHIP | 100PF | 5% | 50V | |
| | | < SWITCH > | | | | |
| S108 | 1-762-875-21 | SWITCH, KEYBOARD (I/⏻) | | | | |
| ********** | | | | | | |
| | A-1438-875-A | S-AIR-CON BOARD, COMPLETE (DZ870M) | | | | |
| | | ********** | | | | |
| | | < CONNECTOR > | | | | |
| * CN110 | 1-564-720-11 | PIN, CONNECTOR (SMALL TYPE) 4P | | | | |

| Ref. No. | Part No. | Description | | | Remark |
|---|---|---|---|---|---|
| * CN111 | 1-564-517-11 | PLUG, CONNECTOR 2P | | | |
| CN112 | 1-779-554-21 | CONNECTOR, FFC (LIF(NON-ZIF)) 17P | | | |
| CN113 | 1-821-744-11 | CONNECTOR, CARD EDGE 30P (EZW-T100) | | | |
| | | < TRANSISTOR > | | | |
| Q120 | 8-729-038-28 | TRANSISTOR RT1N441C-TP-1 | | | |
| Q121 | 6-550-363-01 | TRANSISTOR 2SB1690KT146 | | | |
| | | < RESISTOR > | | | |
| R193 | 1-216-817-11 | METAL CHIP | 470 | 5% | 1/10W |
| R194 | 1-216-817-11 | METAL CHIP | 470 | 5% | 1/10W |
| R195 | 1-216-841-11 | METAL CHIP | 47K | 5% | 1/10W |
| R196 | 1-216-817-11 | METAL CHIP | 470 | 5% | 1/10W |
| R197 | 1-216-833-11 | METAL CHIP | 10K | 5% | 1/10W |
| R198 | 1-216-833-11 | METAL CHIP | 10K | 5% | 1/10W |
| R199 | 1-216-833-11 | METAL CHIP | 10K | 5% | 1/10W |
| R200 | 1-216-833-11 | METAL CHIP | 10K | 5% | 1/10W |
| ********** | | | | | |
| | A-1542-042-A | S-AIR-INC BOARD, COMPLETE (DZ860W/DZ870KW/DZ870W) | | | |
| | | ********** | | | |
| | | < CAPACITOR > | | | |
| C800 | 1-162-970-11 | CERAMIC CHIP | 0.01uF | 10% | 25V |
| C801 | 1-107-826-11 | CERAMIC CHIP | 0.1uF | 10% | 16V |
| C802 | 1-162-917-11 | CERAMIC CHIP | 15PF | 5% | 50V |
| C803 | 1-126-926-11 | ELECT | 1000uF | 20% | 10V |
| C804 | 1-107-826-11 | CERAMIC CHIP | 0.1uF | 10% | 16V |
| C805 | 1-126-964-11 | ELECT | 10uF | 20% | 50V |
| C806 | 1-162-970-11 | CERAMIC CHIP | 0.01uF | 10% | 25V |
| C807 | 1-162-918-11 | CERAMIC CHIP | 18PF | 5% | 50V |
| C808 | 1-162-970-11 | CERAMIC CHIP | 0.01uF | 10% | 25V |
| C809 | 1-126-925-11 | ELECT | 470uF | 20% | 10V |
| C814 | 1-162-927-11 | CERAMIC CHIP | 100PF | 5% | 50V |
| C817 | 1-162-927-11 | CERAMIC CHIP | 100PF | 5% | 50V |
| C818 | 1-107-826-11 | CERAMIC CHIP | 0.1uF | 10% | 16V |
| C819 | 1-107-826-11 | CERAMIC CHIP | 0.1uF | 10% | 16V |
| C820 | 1-107-826-11 | CERAMIC CHIP | 0.1uF | 10% | 16V |
| C821 | 1-107-826-11 | CERAMIC CHIP | 0.1uF | 10% | 16V |
| C822 | 1-107-826-11 | CERAMIC CHIP | 0.1uF | 10% | 16V |
| C823 | 1-107-826-11 | CERAMIC CHIP | 0.1uF | 10% | 16V |
| C824 | 1-107-826-11 | CERAMIC CHIP | 0.1uF | 10% | 16V |
| C825 | 1-126-964-11 | ELECT | 10uF | 20% | 50V |
| C826 | 1-126-964-11 | ELECT | 10uF | 20% | 50V |
| C827 | 1-165-989-11 | CERAMIC CHIP | 10uF | 10% | 6.3V |
| C828 | 1-165-989-11 | CERAMIC CHIP | 10uF | 10% | 6.3V |
| C829 | 1-165-989-11 | CERAMIC CHIP | 10uF | 10% | 6.3V |
| C830 | 1-107-826-11 | CERAMIC CHIP | 0.1uF | 10% | 16V |
| C833 | 1-162-923-11 | CERAMIC CHIP | 47PF | 5% | 50V |
| C834 | 1-162-923-11 | CERAMIC CHIP | 47PF | 5% | 50V |
| C835 | 1-162-923-11 | CERAMIC CHIP | 47PF | 5% | 50V |
| C836 | 1-162-923-11 | CERAMIC CHIP | 47PF | 5% | 50V |
| C839 | 1-137-649-31 | ELECT | 220uF | 20% | 10V |
| C840 | 1-165-908-11 | CERAMIC CHIP | 1uF | 10% | 10V |
| C841 | 1-165-908-11 | CERAMIC CHIP | 1uF | 10% | 10V |
| C843 | 1-164-315-11 | CERAMIC CHIP | 470PF | 5% | 50V |
| C844 | 1-165-908-11 | CERAMIC CHIP | 1uF | 10% | 10V |
| C845 | 1-165-908-11 | CERAMIC CHIP | 1uF | 10% | 10V |
| C846 | 1-165-989-11 | CERAMIC CHIP | 10uF | 10% | 6.3V |
| C882 | 1-162-927-11 | CERAMIC CHIP | 100PF | 5% | 50V |
| C885 | 1-162-927-11 | CERAMIC CHIP | 100PF | 5% | 50V |
| C886 | 1-162-927-11 | CERAMIC CHIP | 100PF | 5% | 50V |
| C888 | 1-126-926-11 | ELECT | 1000uF | 20% | 10V |
| | | < CONNECTOR > | | | |
| CN800 | 1-820-116-41 | CONNECTOR, FFC/FPC 17P | | | |
| CN803 | 1-821-747-11 | CONNECTOR, CARD EDGE 20P (L) (EZW-RT10) | | | |
| CN804 | 1-564-706-11 | PIN, CONNECTOR (SMALL TYPE) 4P | | | |
| | | < DIODE > | | | |
| D800 | 6-501-579-01 | DIODE MC2837 | | | |
| | | < FERRITE BEAD > | | | |
| FB801 | 1-543-949-22 | BEAD, FERRITE (CHIP) (1608) | | | |
| | | < IC > | | | |
| IC800 | 6-712-613-01 | IC SI-3010KM-TLS | | | |
| IC801 | 6-711-418-01 | IC TC74VHC157FK(EL,K) | | | |
| IC802 | 6-709-888-01 | IC TC7WHU04FK(T5RSOYF) | | | |
| IC803 | 6-707-800-01 | IC SRC4182 | | | |
| IC804 | 6-707-800-01 | IC SRC4182 | | | |
| IC805 | 6-710-554-01 | IC PCM1808PWR | | | |
| IC806 | 6-705-312-01 | IC S-T111B33MC-OGSTFG | | | |
| | | < COIL > | | | |
| L800 | 1-469-525-91 | INDUCTOR | 10uH | | |
| L801 | 1-469-525-91 | INDUCTOR | 10uH | | |
| L802 | 1-469-525-91 | INDUCTOR | 10uH | | |
| L803 | 1-469-525-91 | INDUCTOR | 10uH | | |
| L805 | 1-414-398-11 | INDUCTOR | 10uH | | |
| | | < RESISTOR > | | | |
| R800 | 1-216-797-11 | METAL CHIP | 10 | 5% | 1/10W |
| R801 | 1-216-797-11 | METAL CHIP | 10 | 5% | 1/10W |
| R805 | 1-216-864-11 | SHORT CHIP | 0 | | |
| R806 | 1-216-821-11 | METAL CHIP | 1K | 5% | 1/10W |
| R807 | 1-216-821-11 | METAL CHIP | 1K | 5% | 1/10W |
| R808 | 1-216-809-11 | METAL CHIP | 100 | 5% | 1/10W |
| R809 | 1-216-809-11 | METAL CHIP | 100 | 5% | 1/10W |
| R810 | 1-216-809-11 | METAL CHIP | 100 | 5% | 1/10W |
| R811 | 1-216-809-11 | METAL CHIP | 100 | 5% | 1/10W |
| R812 | 1-216-813-11 | METAL CHIP | 220 | 5% | 1/10W |
| R813 | 1-216-827-11 | METAL CHIP | 3.3K | 5% | 1/10W |
| R814 | 1-216-845-11 | METAL CHIP | 100K | 5% | 1/10W |
| R815 | 1-216-845-11 | METAL CHIP | 100K | 5% | 1/10W |
| R817 | 1-218-851-11 | METAL CHIP | 1.5K | 0.5% | 1/10W |
| R818 | 1-218-879-11 | METAL CHIP | 22K | 0.5% | 1/10W |
| R819 | 1-218-871-11 | METAL CHIP | 10K | 0.5% | 1/10W |
| R821 | 1-216-809-11 | METAL CHIP | 100 | 5% | 1/10W |
| R822 | 1-216-809-11 | METAL CHIP | 100 | 5% | 1/10W |
| R824 | 1-216-809-11 | METAL CHIP | 100 | 5% | 1/10W |
| R826 | 1-216-805-11 | METAL CHIP | 47 | 5% | 1/10W |
| R827 | 1-216-805-11 | METAL CHIP | 47 | 5% | 1/10W |
| R828 | 1-216-805-11 | METAL CHIP | 47 | 5% | 1/10W |
| R829 | 1-216-809-11 | METAL CHIP | 100 | 5% | 1/10W |
| R830 | 1-216-809-11 | METAL CHIP | 100 | 5% | 1/10W |
| R831 | 1-216-809-11 | METAL CHIP | 100 | 5% | 1/10W |
| R832 | 1-216-809-11 | METAL CHIP | 100 | 5% | 1/10W |
| R834 | 1-216-809-11 | METAL CHIP | 100 | 5% | 1/10W |
| R835 | 1-216-809-11 | METAL CHIP | 100 | 5% | 1/10W |

**S-AIR-INC** **SCORE** **SERIPARA**

| Ref. No. | Part No. | Description | | | Remark |
|---|---|---|---|---|---|
| R836 | 1-216-809-11 | METAL CHIP | 100 | 5% | 1/10W |
| R837 | 1-216-813-11 | METAL CHIP | 220 | 5% | 1/10W |
| R838 | 1-216-809-11 | METAL CHIP | 100 | 5% | 1/10W |
| R839 | 1-216-809-11 | METAL CHIP | 100 | 5% | 1/10W |
| R840 | 1-216-809-11 | METAL CHIP | 100 | 5% | 1/10W |
| R841 | 1-216-809-11 | METAL CHIP | 100 | 5% | 1/10W |
| R842 | 1-216-809-11 | METAL CHIP | 100 | 5% | 1/10W |
| R843 | 1-216-809-11 | METAL CHIP | 100 | 5% | 1/10W |
| R844 | 1-216-809-11 | METAL CHIP | 100 | 5% | 1/10W |
| R845 | 1-216-864-11 | SHORT CHIP | 0 | | |
| R846 | 1-216-809-11 | METAL CHIP | 100 | 5% | 1/10W |
| R847 | 1-216-809-11 | METAL CHIP | 100 | 5% | 1/10W |
| R848 | 1-216-809-11 | METAL CHIP | 100 | 5% | 1/10W |
| R849 | 1-216-864-11 | SHORT CHIP | 0 | | |
| R850 | 1-216-864-11 | SHORT CHIP | 0 | | |
| R851 | 1-216-864-11 | SHORT CHIP | 0 | | |
| R852 | 1-216-864-11 | SHORT CHIP | 0 | | |
| R855 | 1-216-809-11 | METAL CHIP | 100 | 5% | 1/10W |
| R856 | 1-216-864-11 | SHORT CHIP | 0 | | |
| R858 | 1-216-809-11 | METAL CHIP | 100 | 5% | 1/10W |
| R859 | 1-216-809-11 | METAL CHIP | 100 | 5% | 1/10W |
| R860 | 1-216-813-11 | METAL CHIP | 220 | 5% | 1/10W |
| R861 | 1-216-809-11 | METAL CHIP | 100 | 5% | 1/10W |
| R862 | 1-216-809-11 | METAL CHIP | 100 | 5% | 1/10W |
| R863 | 1-216-813-11 | METAL CHIP | 220 | 5% | 1/10W |
| R864 | 1-216-813-11 | METAL CHIP | 220 | 5% | 1/10W |
| R865 | 1-216-813-11 | METAL CHIP | 220 | 5% | 1/10W |
| R872 | 1-216-833-11 | METAL CHIP | 10K | 5% | 1/10W |
| R873 | 1-216-833-11 | METAL CHIP | 10K | 5% | 1/10W |
| R874 | 1-216-809-11 | METAL CHIP | 100 | 5% | 1/10W |
| R876 | 1-216-809-11 | METAL CHIP | 100 | 5% | 1/10W |
| R877 | 1-216-833-11 | METAL CHIP | 10K | 5% | 1/10W |
| R878 | 1-216-833-11 | METAL CHIP | 10K | 5% | 1/10W |
| R879 | 1-216-833-11 | METAL CHIP | 10K | 5% | 1/10W |
| R880 | 1-216-797-11 | METAL CHIP | 10 | 5% | 1/10W |
| R881 | 1-216-797-11 | METAL CHIP | 10 | 5% | 1/10W |
| R889 | 1-216-864-11 | SHORT CHIP | 0 | | |
| R895 | 1-216-827-11 | METAL CHIP | 3.3K | 5% | 1/10W |
| R896 | 1-216-864-11 | SHORT CHIP | 0 | | |
| R898 | 1-216-864-11 | SHORT CHIP | 0 | | |
| R904 | 1-216-864-11 | SHORT CHIP | 0 | | |
| | | < VIBRATOR > | | | |
| X800 | 1-795-843-11 | VIBRATOR, CRYSTAL (12.288MHz) | | | |

**********

| | | | | | |
|---|---|---|---|---|---|
| | A-1441-335-A | SCORE BOARD, COMPLETE (DZ870KW/DZ870M) | | | |
| | | ********** | | | |
| | | < CAPACITOR > | | | |
| C301 | 1-107-826-11 | CERAMIC CHIP | 0.1uF | 10% | 16V |
| C302 | 1-126-947-11 | ELECT | 47uF | 20% | 35V |
| C303 | 1-165-908-11 | CERAMIC CHIP | 1uF | 10% | 10V |
| C304 | 1-165-908-11 | CERAMIC CHIP | 1uF | 10% | 10V |
| C305 | 1-126-947-11 | ELECT | 47uF | 20% | 35V |
| C306 | 1-107-826-11 | CERAMIC CHIP | 0.1uF | 10% | 16V |
| C307 | 1-126-947-11 | ELECT | 47uF | 20% | 35V |
| C308 | 1-126-947-11 | ELECT | 47uF | 20% | 35V |
| C309 | 1-162-927-11 | CERAMIC CHIP | 100PF | 5% | 50V |
| C310 | 1-162-927-11 | CERAMIC CHIP | 100PF | 5% | 50V |
| C311 | 1-165-908-11 | CERAMIC CHIP | 1uF | 10% | 10V |
| C312 | 1-165-908-11 | CERAMIC CHIP | 1uF | 10% | 10V |
| C313 | 1-126-947-11 | ELECT | 47uF | 20% | 35V |
| C314 | 1-104-662-11 | ELECT | 22uF | 20% | 25V |
| C315 | 1-107-826-11 | CERAMIC CHIP | 0.1uF | 10% | 16V |
| C316 | 1-107-826-11 | CERAMIC CHIP | 0.1uF | 10% | 16V |
| | | < CONNECTOR > | | | |
| CN301 | 1-778-227-41 | CONNECTOR, BOARD TO BOARD 6P | | | |
| | | < DIODE > | | | |
| D301 | 6-501-579-01 | DIODE MC2837 | | | |
| D302 | 6-501-579-01 | DIODE MC2837 | | | |
| D303 | 6-501-817-01 | DIODE MA2J1110GLS0 | | | |
| D304 | 6-501-579-01 | DIODE MC2837 | | | |
| | | < IC > | | | |
| IC301 | 8-759-100-96 | IC uPC4558G2 | | | |
| IC302 | 8-759-700-07 | IC NJM2903M | | | |
| IC303 | 8-759-700-07 | IC NJM2903M | | | |
| | | < JUMPER RESISTOR > | | | |
| JR451 | 1-216-864-11 | SHORT CHIP | 0 | | |
| JR452 | 1-216-864-11 | SHORT CHIP | 0 | | |
| JR453 | 1-216-864-11 | SHORT CHIP | 0 | | |
| | | < RESISTOR > | | | |
| R302 | 1-216-829-11 | METAL CHIP | 4.7K | 5% | 1/10W |
| R303 | 1-216-829-11 | METAL CHIP | 4.7K | 5% | 1/10W |
| R304 | 1-216-821-11 | METAL CHIP | 1K | 5% | 1/10W |
| R305 | 1-216-845-11 | METAL CHIP | 100K | 5% | 1/10W |
| R306 | 1-216-845-11 | METAL CHIP | 100K | 5% | 1/10W |
| R307 | 1-216-825-11 | METAL CHIP | 2.2K | 5% | 1/10W |
| R308 | 1-216-821-11 | METAL CHIP | 1K | 5% | 1/10W |
| R309 | 1-216-851-11 | METAL CHIP | 330K | 5% | 1/10W |
| R310 | 1-216-853-11 | METAL CHIP | 470K | 5% | 1/10W |
| R311 | 1-216-825-11 | METAL CHIP | 2.2K | 5% | 1/10W |
| R312 | 1-216-825-11 | METAL CHIP | 2.2K | 5% | 1/10W |
| R313 | 1-216-841-11 | METAL CHIP | 47K | 5% | 1/10W |
| R314 | 1-216-841-11 | METAL CHIP | 47K | 5% | 1/10W |
| R319 | 1-216-842-11 | METAL CHIP | 56K | 5% | 1/10W |
| R320 | 1-216-825-11 | METAL CHIP | 2.2K | 5% | 1/10W |
| R322 | 1-216-829-11 | METAL CHIP | 4.7K | 5% | 1/10W |
| R323 | 1-216-829-11 | METAL CHIP | 4.7K | 5% | 1/10W |
| R324 | 1-216-829-11 | METAL CHIP | 4.7K | 5% | 1/10W |
| R325 | 1-216-829-11 | METAL CHIP | 4.7K | 5% | 1/10W |
| R326 | 1-216-825-11 | METAL CHIP | 2.2K | 5% | 1/10W |
| R327 | 1-216-837-11 | METAL CHIP | 22K | 5% | 1/10W |
| R328 | 1-216-833-11 | METAL CHIP | 10K | 5% | 1/10W |
| R329 | 1-216-833-11 | METAL CHIP | 10K | 5% | 1/10W |
| R330 | 1-216-829-11 | METAL CHIP | 4.7K | 5% | 1/10W |
| R334 | 1-216-864-11 | SHORT CHIP | 0 | | |
| R336 | 1-216-864-11 | SHORT CHIP | 0 | | |

**********

| | | | | | |
|---|---|---|---|---|---|
| | | SERIPARA BOARD | | | |
| | | ********** | | | |
| | | < CAPACITOR > | | | |
| C600 | 1-124-584-00 | ELECT | 100uF | 20% | 6.3V |

| Ref. No. | Part No. | Description | | | Remark |
|---|---|---|---|---|---|
| C601 | 1-107-826-11 | CERAMIC CHIP | 0.1uF | 10% | 16V |
| | | < CONNECTOR > | | | |
| CN600 | 1-764-865-41 | CONNECTOR, BOARD TO BOARD 13P | | | |
| CN601 | 1-779-544-21 | CONNECTOR, FFC (LIF(NON-ZIF)) 7P | | | |
| | | < IC > | | | |
| IC600 | 6-707-095-01 | IC BH2210FV-E2 | | | |
| | | < RESISTOR > | | | |
| R601 | 1-216-864-11 | SHORT CHIP | 0 | | |
| R602 | 1-216-813-11 | METAL CHIP | 220 | 5% | 1/10W |
| R603 | 1-216-809-11 | METAL CHIP | 100 | 5% | 1/10W |
| R604 | 1-216-813-11 | METAL CHIP | 220 | 5% | 1/10W |
| R606 | 1-216-813-11 | METAL CHIP | 220 | 5% | 1/10W |
| R608 | 1-216-809-11 | METAL CHIP | 100 | 5% | 1/10W |
| R609 | 1-216-809-11 | METAL CHIP | 100 | 5% | 1/10W |
| R610 | 1-216-809-11 | METAL CHIP | 100 | 5% | 1/10W |
| R611 | 1-216-809-11 | METAL CHIP | 100 | 5% | 1/10W |
| R612 | 1-216-809-11 | METAL CHIP | 100 | 5% | 1/10W |
| R613 | 1-216-809-11 | METAL CHIP | 100 | 5% | 1/10W |
| R614 | 1-216-809-11 | METAL CHIP | 100 | 5% | 1/10W |
| R615 | 1-216-809-11 | METAL CHIP | 100 | 5% | 1/10W |
| R616 | 1-216-809-11 | METAL CHIP | 100 | 5% | 1/10W |
| R617 | 1-216-809-11 | METAL CHIP | 100 | 5% | 1/10W |
| R618 | 1-216-809-11 | METAL CHIP | 100 | 5% | 1/10W |
| R619 | 1-216-809-11 | METAL CHIP | 100 | 5% | 1/10W |
| ********** | | | | | |
| | | SPEAKER BOARD | | | |
| | | ********** | | | |
| | | < CAPACITOR > | | | |
| C173 | 1-163-021-11 | CERAMIC CHIP | 0.01uF | 10% | 50V (DZ870M) |
| C174 | 1-162-964-11 | CERAMIC CHIP | 0.001uF | 10% | 50V (DZ870M) |
| C175 | 1-163-021-11 | CERAMIC CHIP | 0.01uF | 10% | 50V (DZ870M) |
| C176 | 1-162-964-11 | CERAMIC CHIP | 0.001uF | 10% | 50V (DZ870M) |
| C177 | 1-163-021-11 | CERAMIC CHIP | 0.01uF | 10% | 50V (EXCEPT DZ870KW/DZ870W:E32,MX) |
| C178 | 1-162-964-11 | CERAMIC CHIP | 0.001uF | 10% | 50V |
| C179 | 1-163-021-11 | CERAMIC CHIP | 0.01uF | 10% | 50V (EXCEPT DZ870KW/DZ870W:E32,MX) |
| C180 | 1-162-964-11 | CERAMIC CHIP | 0.001uF | 10% | 50V |
| C181 | 1-163-021-11 | CERAMIC CHIP | 0.01uF | 10% | 50V (EXCEPT DZ870KW/DZ870W:E32,MX) |
| C182 | 1-162-964-11 | CERAMIC CHIP | 0.001uF | 10% | 50V |
| C183 | 1-163-021-11 | CERAMIC CHIP | 0.01uF | 10% | 50V (EXCEPT DZ870KW/DZ870W:E32,MX) |
| C184 | 1-162-964-11 | CERAMIC CHIP | 0.001uF | 10% | 50V |
| C185 | 1-163-021-11 | CERAMIC CHIP | 0.01uF | 10% | 50V (DZ870M) |
| C186 | 1-162-964-11 | CERAMIC CHIP | 0.001uF | 10% | 50V (DZ870M) |
| C187 | 1-163-021-11 | CERAMIC CHIP | 0.01uF | 10% | 50V (DZ870M) |
| C188 | 1-162-964-11 | CERAMIC CHIP | 0.001uF | 10% | 50V (DZ870M) |

| Ref. No. | Part No. | Description | Remark |
|---|---|---|---|
| | | < CONNECTOR > | |
| * CN114 | 1-564-523-11 | PLUG, CONNECTOR 8P (DZ870M) | |
| * CN115 | 1-564-519-11 | PLUG, CONNECTOR 4P | (DZ860W/DZ870KW/DZ870W) |
| | | < TERMINAL BOARD > | |
| TB100 | 1-780-454-11 | TERMINAL BOARD (SPEAKER) 4P | (SPEAKER FRONT R/FRONT L/SUR R/SUR L) (DZ870M) |
| TB101 | 1-780-576-11 | TERMINAL BOARD (SPEAKER) 2P | (SPEAKER FRONT R/FRONT L) (DZ860W/DZ870KW/DZ870W) |
| ********** | | | |
| | | MISCELLANEOUS | |
| | | ********** | |
| 5 | 1-828-350-11 | WIRE (FLAT TYPE) (17 CORE) (DZ870M) | |
| ⚠ 7 | 1-569-008-22 | ADAPTOR, CONVERSION 2P (DZ870W:E15,E32) | |
| ⚠ 8 | 1-769-079-61 | CORD, POWER (DZ870W:KR) | |
| ⚠ 8 | 1-827-597-42 | CORD, POWER (DZ870W:TW) | |
| ⚠ 8 | 1-834-288-11 | CORD, POWER (DZ870KW:TH) | |
| ⚠ 8 | 1-834-966-21 | CORD, POWER (DZ860W:AEP,CE2/DZ870KW:SP/ DZ870M/DZ870W:E3,E15,E32,EA) | |
| ⚠ 8 | 1-834-967-21 | CORD, POWER (DZ870W:AUS) | |
| ⚠ 8 | 1-834-978-11 | CORD, POWER (DZ870W:MX) | |
| ⚠ 8 | 1-835-078-21 | CORD, POWER (DZ860W:UK) | |
| 12 | 1-828-002-11 | WIRE (FLAT TYPE) (17 CORE) | (DZ860W/DZ870KW/DZ870W) |
| 14 | 1-827-720-11 | WIRE (FLAT TYPE) (11 CORE) (DZ860W/DZ870M) | |
| 14 | 1-828-955-11 | WIRE (FLAT TYPE) (9 CORE) (DZ870KW/DZ870W) | |
| ⚠ 16 | 1-770-019-61 | ADAPTOR, CONVERSION PLUG (EA) | |
| 63 | 1-828-307-11 | WIRE (FLAT TYPE) (9 CORE) | |
| 64 | 1-828-363-11 | WIRE (FLAT TYPE) (19 CORE) | |
| 106 | 1-828-293-11 | WIRE (FLAT TYPE) (5 CORE) | |
| 107 | 1-828-309-11 | WIRE (FLAT TYPE) (9 CORE) (DZ870W) | |
| 107 | 1-828-319-11 | WIRE (FLAT TYPE) (11 CORE) | (DZ860W/DZ870KW) |
| 107 | 1-828-329-11 | WIRE (FLAT TYPE) (13 CORE) (DZ870M) | |
| 108 | 1-828-347-11 | WIRE (FLAT TYPE) (17 CORE) | (DZ870KW/DZ870M/DZ870W) |
| 108 | 1-828-357-11 | WIRE (FLAT TYPE) (19 CORE) (DZ860W) | |
| 111 | 1-828-299-11 | WIRE (FLAT TYPE) (7 CORE) | |
| 117 | 1-828-287-11 | WIRE (FLAT TYPE) (5 CORE) (DZ860W/DZ870W) | |
| 117 | 1-828-296-11 | WIRE (FLAT TYPE) (7 CORE) (DZ870KW/DZ870M) | |
| ⚠ 157 | 8-820-321-05 | OPTICAL PICK-UP KHM-313CAA/C2RP | |
| 158 | 1-828-773-51 | WIRE (FLAT TYPE) (24 CORE) | |
| ⚠ F901 | 1-533-311-12 | FUSE, GLASS CYLINDRICAL (DIA. 5) (8A/125V) | (DZ870W:MX,TW) |
| ⚠ F901 | 1-576-233-51 | FUSE (H.B.C.) (T6.3AL/250V) | (EXCEPT DZ870W:E32,MX,TW) |
| ⚠ F901 | 1-576-300-51 | FUSE (H.B.C.) (T8AL/250V) (DZ870W:E32) | |
| FAN3001 | 1-787-331-11 | FAN, D.C. | |
| TU401 | 1-693-759-11 | TUNER (FM/AM) (ANTENNA) (DZ860W/DZ870M) | |
| TU401 | 1-693-760-11 | TUNER (FM/AM) (ANTENNA) (DZ870W:KR) | |
| TU401 | 1-693-761-11 | TUNER (FM/AM) (ANTENNA) | (DZ870KW/DZ870W:EXCEPT KR) |

# REVISION HISTORY

Checking the version allows you to jump to the revised page.
Also, clicking the version at the top of the revised page allows you to jump to the next revised page.

| Ver. | Date | Description of Revision |
|---|---|---|
| 1.0 | 2008.04 | New |
| 1.1 | 2008.07 | Addition of Saudi Arabia model to HCD-DZ870W. |